4033452 / 8

IM-P403-89
EMM Issue 8

BC3250
Blowdown Controller

Installation and Maintenance Instructions

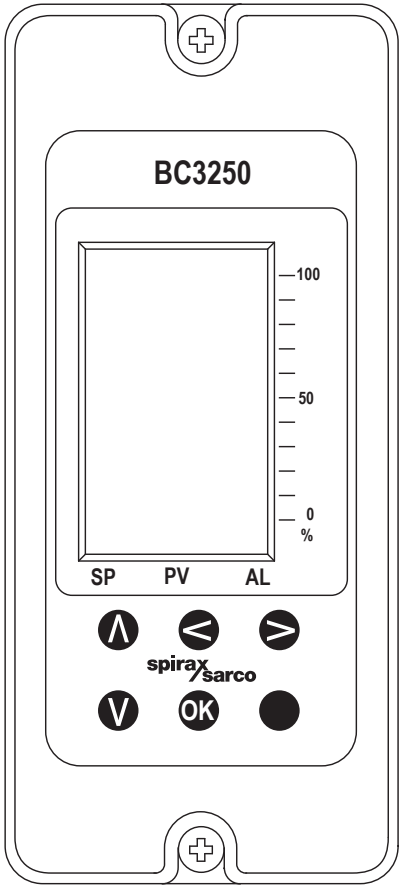

1. Safety information
2. User instructions and delivery information
3. System overview
4. Mechanical installation
5. Electrical installation
6. Commissioning
   - Quick set-up
   - Full
7. Communications
8. Maintenance
9. Fault finding
10. Technical information
    - Default settings
11. Appendix
    - Summary of the Modbus protocol
12. Menu map

© Copyright 2017

Printed in GB

SHOPVALVES
GLOBAL VALVE SOLUTIONS | 阀门易购

Commissioning password

Current legislation states that in order to prevent tampering and potentially hazardous programming errors, access to the pass codes required to enter commissioning mode should only be available to qualified and trained personnel.

Enter commissioning

This is done from the run mode by pressing and holding down the OK button for 5 seconds.

PASS CODE

8888

The bar graphs will disappear and the display will show 'PASS CODE' with '8888' at the bottom right corner of the screen. The flashing leading digit indicates the position of the cursor. The default, or factory set pass code is 7452 but this can be changed from within the commissioning mode. The pass code can be entered by using the ∧ and ∨ buttons to increase or decrease the flashing value and the < and > buttons to move the cursor.

Pressing OK will enter the pass code. If an incorrect pass code is used, the display automatically returns to the run mode.

This page MUST be removed after commissioning and kept in a safe, access controlled location.

SHOPVALVES
GLOBAL VALVE SOLUTIONS | 阀门易购

Special functions in run mode

Purge
Manually opens the blowdown valve for the purge time set during commissioning. If the purge time has been set to zero,· the valve will open for 1 minute.

- Using the '∧' or '∨' buttons, select 'PURGE'.
- Pressing the '<' or '>' opens the blowdown valve for the purge time or 1 minute.
- The display will return to the process variable run menu.
- 'BLOWDOWN-PURGE' or 'BLOWDOWN-TDS TEST' will appear on the information line during this period.
- On completion of the purge time, the controller will revert to normal control.

Cleaning
Activates a probe cleaning cycle for the period of time set during commissioning.

- Using the '∧' or '∨' buttons, select 'CLEAN'.
- Pressing the '<' or '>' to active the cleaning cycle and the blowdown valve will close.
- The display will return to the process variable run menu.
- 'CLEANING' will appear on the information line during this period.
- On completion of the cleaning time, the controller will revert to normal control after 20 seconds. This is to allow any bubbles to disperse.

CAL
Enables the water treatment engineer / specialist to calibrate the controller from the run menu. A pass code is not required.

- Using the '∧' or '∨' buttons, select 'CAL'.
- Pressing the '<' or '>' will access the calibration menu in commission mode. See Section 6.4.6.5 INPUT-TDS-CAL.
- On completion or exiting calibration, the display will return to the process variable run menu and normal control will be resumed.

This page MUST be removed after commissioning and kept in a safe, access controlled location.

SHOPVALVES GLOBAL VALVE SOLUTIONS | 阀门易购

1. Safety information

Safe operation of this product can only be guaranteed if it is properly installed, commissioned, used and maintained by qualified personnel (see Section 1.11) in compliance with the operating instructions. General installation and safety instructions for pipeline and plant construction, as well as the proper use of tools and safety equipment must also be complied with.

Your attention is drawn to IEE Regulations (BS 7671, EN 12953, EN 12952 and EN 50156). Elsewhere, other regulations will normally apply.

All wiring materials and methods shall comply with relevant EN and IEC standards where applicable.

Warning

This product is designed and constructed to withstand the forces encountered during normal use. Use of the product other than as a boiler controller, or failure to install the product in accordance with these Instructions, product modifications or repair could:

- **Cause injury or fatality to personnel.**
- **Cause damage to the product / property.**
- **Invalidate the CE marking.**

These instructions must be stored in a safe place near the product installation at all times.

Warning

This product complies with Electromagnetic Compatibility Directive 2014/30/EU and all its requirements.

This product is suitable for Class A Environments (e.g. industrial). A fully detailed EMC assessment has been made and has the reference number UK Supply BH BC3250 2008.

The product may be exposed to interference above the limits of Heavy Industrial Immunity if:

- **The product or its wiring is located near a radio transmitter.**
- **Excessive electrical noise occurs on the mains supply. Power line protectors (ac) should be installed if mains supply noise is likely. Protectors can combine filtering, suppression, surge and spike arrestors.**
- **Cellular telephones and mobile radios may cause interference if used within approximately 1 metre (39") of the product or its wiring. The actual separation distance necessary will vary according to the surroundings of the installation and the power of the transmitter.**

This product complies with Low Voltage Directive 2014/35/EU by meeting the standards of:

- **EN 61010-1:2010 Safety requirements for electrical equipment for measurement, control, and laboratory use.**

Static precautions (ESD)

Static precautions must be observed at all times to avoid damage to the product.

SHOPVALVES GLOBAL VALVE SOLUTIONS | 阀门易购

SHOPVALVES
GLOBAL VALVE SOLUTIONS | 阀门易购

Symbols

Equipment protected throughout by double insulation or reinforced insulation.

Functional earth (ground) terminal, to enable the product to function correctly.
Not used to provide electrical safety.

Clean earth / ground.

Safety earth.

Caution, risk of electric shock.

Caution, risk of danger, refer to accompanying documentation.

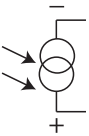

Optically isolated current source or sink.

Caution, Electrostatic Discharge (ESD) sensitive circuit. Do not touch or handle without proper electrostatic discharge precautions.

ac, alternating current.

SHOPVALVES
GLOBAL VALVE SOLUTIONS | 阀门易购

SHOPVALVES
GLOBAL VALVE SOLUTIONS | 阀门易购

1.1 Intended use

i) Check that the product is suitable for use with the intended fluid.

ii) Check material suitability, pressure and temperature and their maximum and minimum values. If the maximum operating limits of the product are lower than those of the system in which it is being fitted, or if malfunction of the product could result in a dangerous overpressure or overtemperature occurrence, ensure a safety device is included in the system to prevent such over-limit situations.

iii) Determine the correct installation situation and direction of fluid flow.

iv) Spirax Sarco products are not intended to withstand external stresses that may be induced by any system to which they are fitted. It is the responsibility of the installer to consider these stresses and take adequate precautions to minimise them.

v) Remove protection covers from all connections and protective film from all name-plates, where appropriate, before installation on steam or other high temperature applications.

1.2 Access

Ensure safe access and if necessary a safe working platform (suitably guarded) before attempting to work on the product. Arrange suitable lifting gear if required.

1.3 Lighting

Ensure adequate lighting, particularly where detailed or intricate work is required.

1.4 Hazardous liquids or gases in the pipeline

Consider what is in the pipeline or what may have been in the pipeline at some previous time. Consider: flammable materials, substances hazardous to health, extremes of temperature.

1.5 Hazardous environment around the product

Consider: explosion risk areas, lack of oxygen (e.g. tanks, pits), dangerous gases, extremes of temperature, hot surfaces, fire hazard (e.g. during welding), excessive noise, moving machinery.

1.6 The system

Consider the effect on the complete system of the work proposed. Will any proposed action (e.g. closing isolation valves, electrical isolation) put any other part of the system or any personnel at risk?
Dangers might include isolation of vents or protective devices or the rendering ineffective of controls or alarms. Ensure isolation valves are turned on and off in a gradual way to avoid system shocks.

1.7 Pressure systems

Ensure that any pressure is isolated and safely vented to atmospheric pressure. Consider double isolation (double block and bleed) and the locking or labelling of closed valves. Do not assume that the system has depressurised even when the pressure gauge indicates zero.

1.8 Temperature

Allow time for temperature to normalise after isolation to avoid danger of burns.

SHOPVALVES
GLOBAL VALVE SOLUTIONS | 阀门易购

SHOPVALVES
GLOBAL VALVE SOLUTIONS | 阀门易购

1.9 Tools and consumables

Before starting work ensure that you have suitable tools and / or consumables available. Use only genuine Spirax Sarco replacement parts.

1.10 Protective clothing

Consider whether you and / or others in the vicinity require any protective clothing to protect against the hazards of, for example, chemicals, high / low temperature, radiation, noise, falling objects, and dangers to eyes and face.

1.11 Permits to work

All work must be carried out or be supervised by a suitably competent person.
Installation and operating personnel should be trained in the correct use of the product according to the Installation and Maintenance Instructions.
Where a formal 'permit to work' system is in force it must be complied with. Where there is no such system, it is recommended that a responsible person should know what work is going on and, where necessary, arrange to have an assistant whose primary responsibility is safety.
Post 'warning notices' if necessary.

1.12 Handling

Manual handling of large and / or heavy products may present a risk of injury. Lifting, pushing, pulling, carrying or supporting a load by bodily force can cause injury particularly to the back. You are advised to assess the risks taking into account the task, the individual, the load and the working environment and use the appropriate handling method depending on the circumstances of the work being done.

1.13 Residual hazards

In normal use the external surface of the product may be very hot.
Many products are not self-draining. Take due care when dismantling or removing the product from an installation.

1.14 Freezing

Provision must be made to protect products which are not self-draining against frost damage in environments where they may be exposed to temperatures below freezing point.

1.15 Disposal

On disposal of the unit or component, appropriate precautions should be taken in accordance with Local / National regulations.

Unless otherwise stated in the Installation and Maintenance Instructions this product is recyclable and no ecological hazard is anticipated with its disposal providing due care is taken.

1.16 Returning products

Customers and stockists are reminded that under EC Health, Safety and Environment Law, when returning products to Spirax Sarco they must provide information on any hazards and the precautions to be taken due to contamination residues or mechanical damage which may present a health, safety or environmental risk. This information must be provided in writing including Health and Safety data sheets relating to any substances identified as hazardous or potentially hazardous.

SHOPVALVES
GLOBAL VALVE SOLUTIONS | 阀门易购

SHOPVALVES
GLOBAL VALVE SOLUTIONS | 阀门易购

2. User instructions and delivery information

Certain computer programs contained in this product were developed by Spirax-Sarco Limited ("the Work(s)").

Copyright © Spirax-Sarco Limited 2017

All rights reserved

Spirax-Sarco Limited grants the legal user of this product (or device) the right to use the Work(s) solely within the scope of the legitimate operation of the product (or device). No other right is granted under this licence. In particular and without prejudice to the generality of the foregoing, the Work(s) may not be used, sold, licensed, transferred, copied or reproduced in whole or in part or in any manner or form other than as expressly granted here without the prior written consent of Spirax-Sarco Limited.

2.1 General description

The BC3250 is a blowdown controller for steam boilers. It controls TDS (total dissolved solids – salts in solution) by opening and closing a blowdown valve. It also controls a bottom blowdown valve, which removes precipitated solids from the bottom of the boiler shell.

The product works by controlling the conductivity of liquids, in conjunction with a Spirax Sarco conductivity sensor, a boiler blowdown valve or condensate dump valve.

The bottom blowdown valve is controlled by a timer.

The front panel has an LCD graphics display and five-button keypad.

An additional filter can be selected to increase the damping effect where the probe is fitted directly in the boiler. This avoids over-frequent valve operation.

SHOPVALVES
GLOBAL VALVE SOLUTIONS | 阀门易购

SHOPVALVES
GLOBAL VALVE SOLUTIONS | 阀门易购

2.2 Front panel

The front panel has an LCD graphics display and five-button keypad:

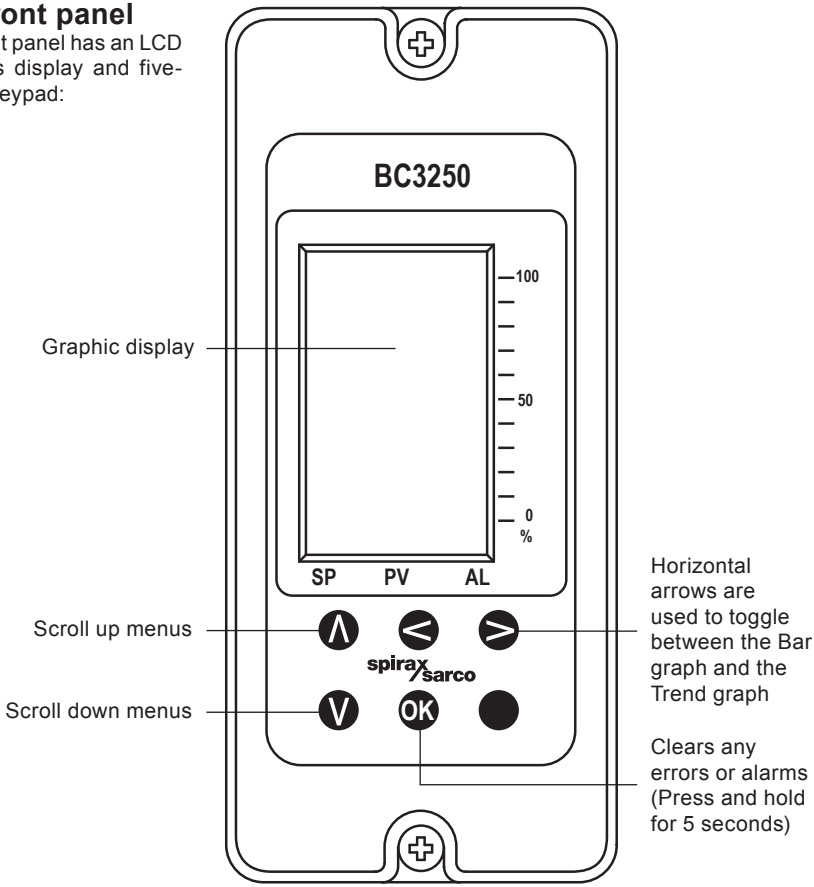

Fig. 1 Front panel keypad and definitions.

2.3 Using the buttons

The ∧ and ∨ buttons are used to:

- scroll up and down through the menus.

The < and > buttons are used to move between the Bar graph and the Trend graph.

The OK button is used to clear errors or alarms.

SHOPVALVES
GLOBAL VALVE SOLUTIONS | 阀门易购

SHOPVALVES
GLOBAL VALVE SOLUTIONS | 阀门易购

2.4 LCD display

After initially applying power to the product, it will automatically enter run mode. If a clean time has been set, a cleaning cycle will start. The current conductivity or TDS will then be displayed or 0000 if a purge time has been set.

The display is divided into three sections:

- Four large digits, displaying the process variable and control parameters (last digit is blanked off or always reads zero).
- Information line, displays the various control states and process units.
- Three bar graphs, which shows a percentage of full scale:
  - PV Process Variable, the highest and lowest recorded value.
  - SP Set Point (line and arrow) and the hysteresis point (dotted line).
  - AL High Alarm level (line and arrow) with hysteresis point (dotted line).

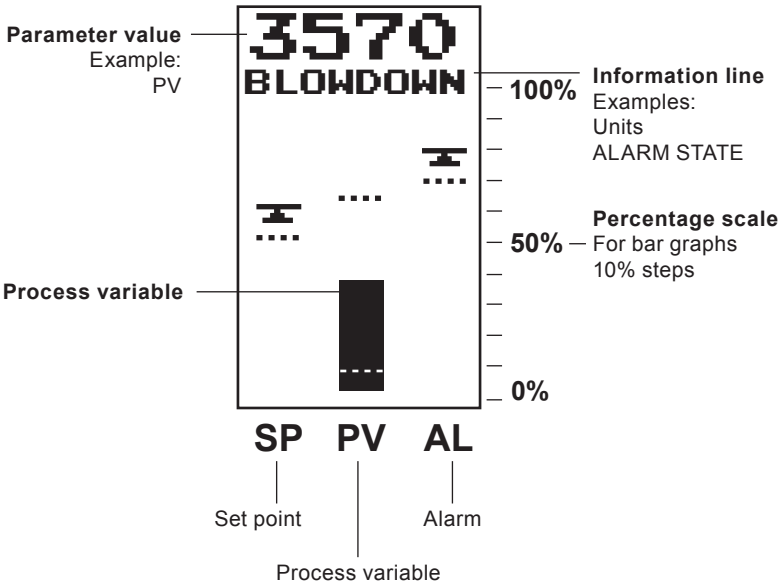

Fig. 2 Graphics display definitions

SHOPVALVES
GLOBAL VALVE SOLUTIONS | 阀门易购

SHOPVALVES
GLOBAL VALVE SOLUTIONS | 阀门易购

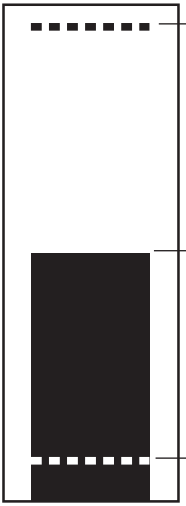

Highest process variable reached
This can be reset by entering the commissioning mode.

Current process variable
Graphical representation of the process variable in terms of percentage of full scale.

Lowest process variable
This can be reset by entering the commissioning mode.

Fig. 3 PV (conductivity) bar graph definitions

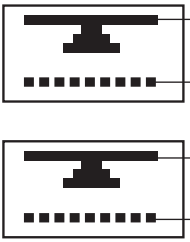

Fig. 4 SP and alarm bar graph definitions

2.5 Trend graph

A second screen display appears if the ⊕ or ⊖ button is pressed in run mode. Except CAL, PURGE and CLEAN

This shows a Trend graph, which displays a record of the variation in TDS over a set time. The most recent event / value is to the left of the graph.

Time can be set in minutes, hours or days, up to 8 units. Time base setting is carried out via the TREND menu.

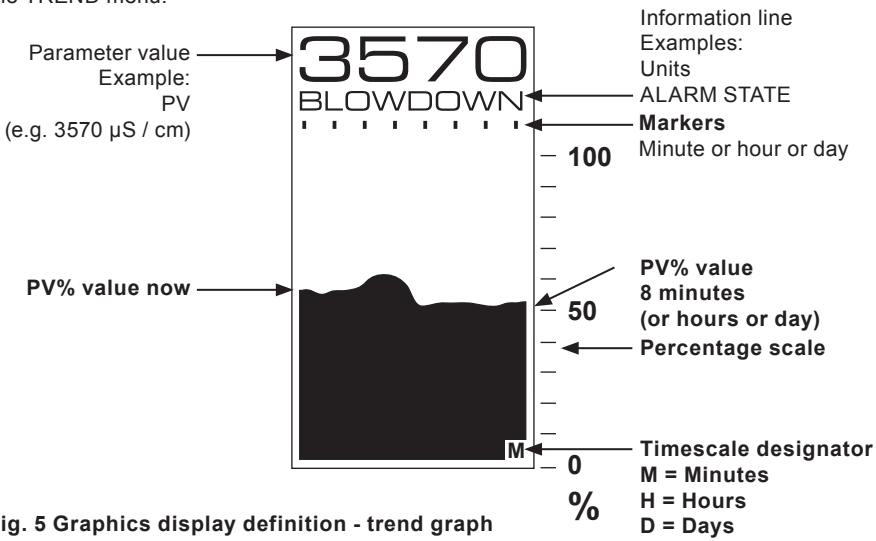

Fig. 5 Graphics display definition - trend graph

SHOPVALVES
GLOBAL VALVE SOLUTIONS | 阀门易购

SHOPVALVES
GLOBAL VALVE SOLUTIONS | 阀门易购

2.6 Information line

The information line will show 'PPM' or 'US / CM' and will alternate with information about alarms or the TDS / Bottom Blowdown Valve status.

If an alarm occurs, the TDS / Bottom Blowdown Valve status will not show. 'ALARM' will be shown first followed by the type of alarm. See Section 9 – 'Fault finding' for types of errors.

Example of alarm status:

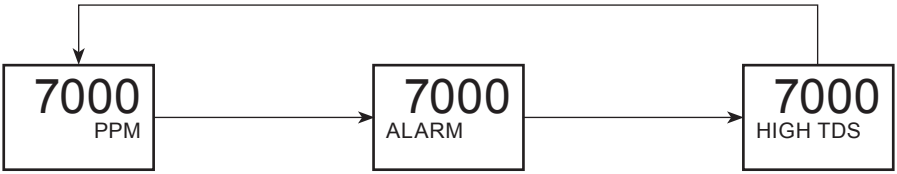

If a bottom or TDS blowdown occurs, 'BLOWDOWN' will be displayed, followed by the type of blowdown.

Example of valve status:

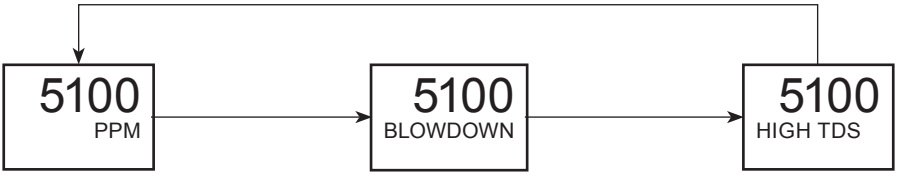

If both the bottom and TDS blowdown occurs, the display will show the following:

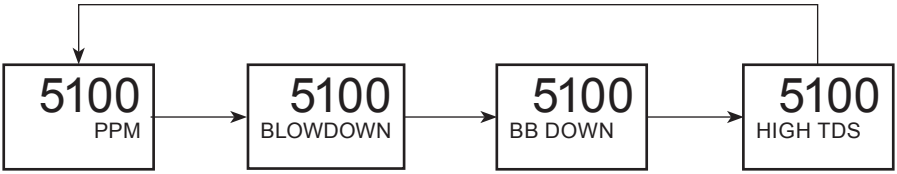

SHOPVALVES
GLOBAL VALVE SOLUTIONS | 阀门易购

SHOPVALVES
GLOBAL VALVE SOLUTIONS | 阀门易购

Information line details (in priority order):

Alarm:

- **ALARM** - Indicates the alarm relay has been de-energised / released.
- **ALM TEST -** the operator is testing the alarm relay. The relay is either energised (shown without 'ALARM') or de-energised (shown with 'ALARM') for 5 minutes. See commissioning mode TEST-OUTPUT-ALARM menu.
- **BB ERROR -** See details in the error screen in run mode and Section 9 - 'Fault finding'.
- **SCALED -** See details in Section 9.3 - 'Operational error messages'
- **TDS HIGH -** The PV value has exceeded the alarm level.

Bottom blowdown valve (BB):

- **BLOWDOWN -** Indicates either the bottom or TDS blowdown relay is energised.
- **BB TEST -** the operator is testing the bottom blowdown relay. The relay is either energised ('ON') or de-energised ('OFF') for 5 minutes. See commissioning mode TEST-OUTPUT-BB VALVE menu.
- **BB OPEN -** the valve has been opened continuously i.e. manual override. See commissioning TIMER-MODE-OPEN menu.
- **BB OFF -** the timer is switched off i.e. manual override. The timer will ignore all pre-recorded times. See commissioning TIMER-MODE-OFF menu.
- **BB BLDN -** a timed bottom blowdown is occurring i.e. the valve is open.

TDS blowdown valve (Conductivity / Total Dissolved Solids):

- **BLOWDOWN -** Indicates either the bottom or TDS blowdown relay is energised.
- **TDS TEST -** The operator is testing the TDS blowdown relay. The relay is either energised ('ON') or de-energised ('OFF') for 5 minutes. See commissioning mode TEST-OUTPUT-VALVE menu.
- **CLEANING -** Indicates the probe is being cleaned. The valve has been switched off.
- **PULSED -** The TDS has increased above the Set Point (SP), and the TDS blowdown valve is being pulsed open for 10 second on and 20 seconds off until the TDS drops below the hysteresis of the SP.
- **TDS HIGH -** The TDS has increased above the Set Point (SP), and the TDS blowdown valve has been opened until the TDS drops below the hysteresis of the SP.
- **PURGE -** is displayed during a purge period (valve open). At the end of this time the product will either indicate 'TDS HIGH, PULSED ' or restart another purge interval.

TDS recalibration required:

- **TDS CAL + REQUIRED -** If selected, the product can remind the user when another calibration is required. The reminder will only be displayed if an alarm or a blowdown is not occurring.

SHOPVALVES
GLOBAL VALVE SOLUTIONS | 阀门易购

SHOPVALVES
GLOBAL VALVE SOLUTIONS | 阀门易购

2.7 Viewing parameters

In run mode the general data is displayed on several screens, which can be accessed by pressing the ∧ and ∨ buttons. The parameter will appear on the display, alternating with the value buttons.

4680 US / CM	Process variable (PV) is displayed (current conductivity or TDS), in µS / cm or ppm, depending on user choice.
9990 RANGE	Shows the range that has been selected by the user. e.g. 0 - 9990
5000 SP	Set Point (SP), displays the desired water conductivity or TDS selected by the user.
500 SP HYST	Shows the hysteresis value (dead-band) selected to prevent over-frequent valve operation in a turbulent boiler.
9990 ALARM	Alarm (AL), displays the high alarm water conductivity or TDS. Flashing AL and µS / cm or ppm.
300 AL HYST	Shows the alarm hysteresis chosen by the user. A damping effect for turbulent conditions. Normally 3% of alarm figure.
0.50 PROBE F	Shows probe factor, an indication of the probe condition.
4150 CAL	Calibration (CAL) value. Displays the last calibration value.
0. 20 O / P MA	Displays the configuration of the re-transmit mode, either: '0. 20' = 0 – 20 mA or '4. 20' = 4 – 20 mA
239 OP TEMP	Operating temperature (OP TEMP) if Pt100 is fitted. Display alternates OP TEMP and ºC

SHOPVALVES
GLOBAL VALVE SOLUTIONS | 阀门易购

SHOPVALVES
GLOBAL VALVE SOLUTIONS | 阀门易购

20 PURGE S	Shows purge time (probe in pipeline). Flashes PURGE and 'S' (seconds). Pressing the '<' or '>' opens the blowdown valve for the purge time or 1 minute.
10 CLEAN S	Shows the cleaning time selected. Flashes CLEAN and 'S' (seconds). Pressing the '<' or '>' to active the cleaning cycle and the blowdown valve will close. CLEAN is shown only if clean time > 0
30 TIMER S	Timer - duration - set. Shows the bottom blowdown time selected by the user (in seconds). Timer - duration - set is shown only if timer duration > 0
29 TIMER S	Timer - duration – now. Shows elapsed duration time (in seconds). Timer - duration – now is shown only if timer duration > 0
12 TIMER HRS	Timer - interval – set. Shows interval time selected by the user (in hours). Timer - interval - set is shown only if timer duration > 0
11 TIMER	Timer - interval – now. Shows elapsed interval time (in hours, minutes and seconds). Timer - interval – now is shown only if timer duration > 0
ERROR: POWEROUT	If there are any problems with the product, error or alarm will appear. The example shows a power failure.

Please note that the display will always revert to displaying the current conductivity or TDS valve if a button has not been pressed for 2 minutes.

SHOPVALVES
GLOBAL VALVE SOLUTIONS | 阀门易购

SHOPVALVES
GLOBAL VALVE SOLUTIONS | 阀门易购

2.8 Alarm / error display messages

These are shown on a screen in the run mode. This screen is normally hidden and will only appear if there's a problem. Alarm and error messages are prioritized, so if there are two active problems, clearing the first will immediately cause the lower priority one to appear. Some, such as the power-fail error message, can be cleared by pressing and holding the ok button for three seconds. Others, such as a sensor error or a commissioning errorwill need further action to clear them. See Section 9 – 'Fault finding'.

2.9 Equipment delivery, handling and storage

Factory shipment

The product is tested, calibrated and inspected prior to shipment to ensure proper operation.

Receipt of shipment

Each carton should be inspected at the time of delivery for possible external damage. Any visible damage should be recorded immediately on the carrier's copy of the delivery slip.

Each carton should be unpacked carefully and its contents checked for damage. If it is found that some items have been damaged or are missing, notify Spirax Sarco immediately and provide full details. In addition, damage must be reported to the carrier with a request for their on-site inspection of the damaged item and its shipping carton.

Storage

If the product is to be stored for a period prior to installation, the environmental storage conditions should be at a temperature between 0 °C and 65 °C (32 °F and 149 °F), and between 10% and 90% relative humidity (non-condensing).

Ensure there is no condensation within the unit before installing and connecting the power.

Operators instructions

An alternative operator instruction manual, in place of this manual, for operating the equipment is required. This will avoid the commissioning menu passcode being disclosed to the operator. The alarm reset passcode may optionally be disclosed if this is deemed necessary.

SHOPVALVES
GLOBAL VALVE SOLUTIONS | 阀门易购

SHOPVALVES
GLOBAL VALVE SOLUTIONS | 阀门易购

3. System overview

3.1 Function

The controller has an adjustable alarm and set point levels.

The product can be configured to control TDS / conductivity of water. Once fully commissioned, the TDS value is displayed in µS / cm (or ppm if selected).

Note: Conductivity is expressed in parts per million (ppm) or micro Siemens per centimetre (µS / cm). Micro Siemens / centimetre is becoming the more common unit, and is therefore the default setting.

If the water conductivity exceeds the set point level, 'BLOWDOWN' will be displayed and valve relay will be energised until the conductivity drops below the set point level (plus a hysteresis value).

The hysteresis setting is adjustable and provides a damping effect where water movement at the probe may otherwise cause over-frequent switching of the blowdown or dump valve. This could be caused, for example, by boiler firing rate variations, by the feedpump operating, or by sudden changes in boiler load.

If the water conductivity exceeds the alarm level, 'HI ALARM' will be displayed and the alarm relay will be de-energised until the conductivity drops below the alarm level (plus a hysteresis value).

3.2 Inputs

The BC3250 can accept a signal from a Spirax Sarco conductivity probe (CP10, CP30 or CP32) and a Pt100 temperature sensor.

A Pt100 temperature sensor may be connected to the controller to display the boiler water temperature (°C or °F) and provide temperature compensation (2% / °C). This is recommended if the boiler is working at varying pressures, or for other applications such as condensate monitoring or coil boilers, where the temperature may vary.

If a Pt100 is not fitted, the boiler operating temperature can be entered.

The default temperature value is 184 °C @ 10 bar g.

SHOPVALVES
GLOBAL VALVE SOLUTIONS | 阀门易购

SHOPVALVES
GLOBAL VALVE SOLUTIONS | 阀门易购

3.3 Outputs

3.3.1 Continuous output

Used when the probe is mounted in the boiler. The probe is able to constantly monitor the conductivity from the probe tip to the boiler shell.

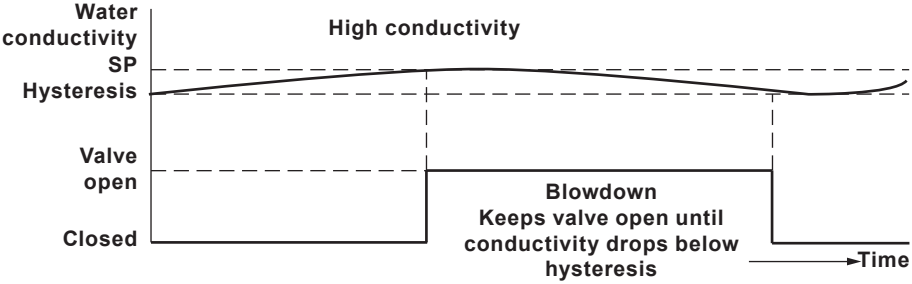

Fig. 6 Continuous output (purge time = 0s)

3.3.2 Purge output

Used only when the probe is mounted in the blowdown line, Purge ensures the sensor measures the conductivity at boiler temperature. The purge duration time is the time the valve is open to enable a representative boiler sample to reach the probe. A purge occurs every PURGE - INTERVAL time either independent of burner firing, or dependent on cumulative boiler firing time.

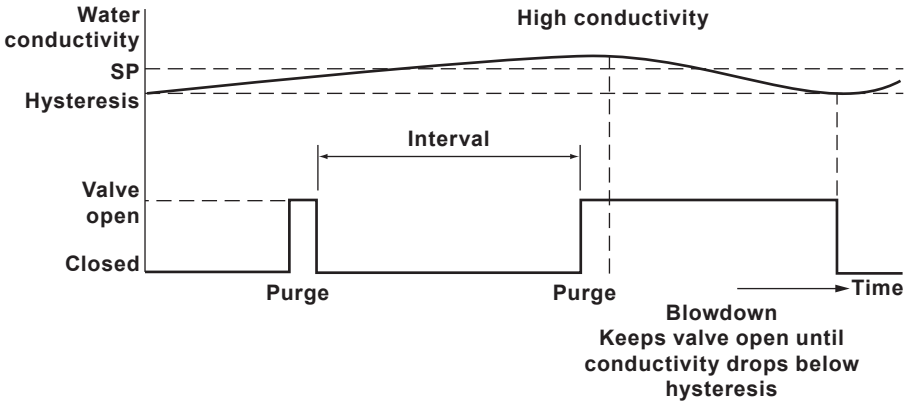

Fig. 7 Output with purge time set (>0s)

SHOPVALVES
GLOBAL VALVE SOLUTIONS | 阀门易购

SHOPVALVES
GLOBAL VALVE SOLUTIONS | 阀门易购

3.3.3 Pulsed output

For smaller boilers where the capacity of the blowdown valve is relatively high compared to the boiler size, the blowdown may be set to pulsed, rather than continuous output, opening for 10 seconds, and closing for 20 seconds. This slows the rate at which the boiler water is removed so that the level is not unduly affected, avoiding the risk of triggering a low water alarm.

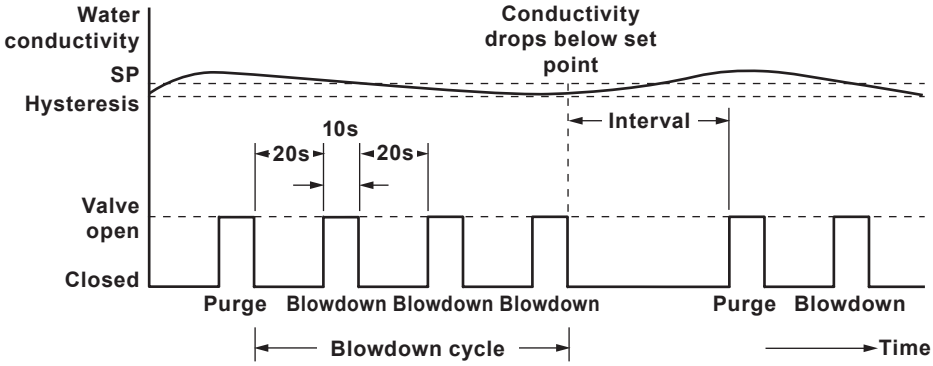

Fig. 8 Pulse output with purge time set (>0s)

3.3.4 4 - 20mA retransmit

An isolated 0 - 20 or 4 - 20 mA output is provided as standard, and may be used for remote display of the TDS level or as an output to a management system. The menu allows both 0 / 4 mA and 20 mA to be re-ranged.

3.3.5 Bottom blowdown timer

The timer can be used to control the interval and duration of a bottom blowdown cycle.
If a switch box is fitted to the bottom blowdown valve actuator, an alarm can be configured to indicate if the valve fails to close or to lift off its seat.

3.4 Other features

A test function provides the operator with a diagnostic facility. Inputs can be measured and outputs can be set from the front panel. The controller also displays the approximate probe factor directly.

To prevent unwanted or inadvertent changes being made, all commissioning parameters are protected with a pass code. This can be changed by the user if required.

The BC3250 can communicate via an infrared link between adjacent boiler house controllers (Spirax Sarco products only). It is designated as a master or a slave unit as required – see Section 7 – 'Communications'.

SHOPVALVES
GLOBAL VALVE SOLUTIONS | 阀门易购

SHOPVALVES
GLOBAL VALVE SOLUTIONS | 阀门易购

3.5 Typical applications - Boiler control systems (BCS)

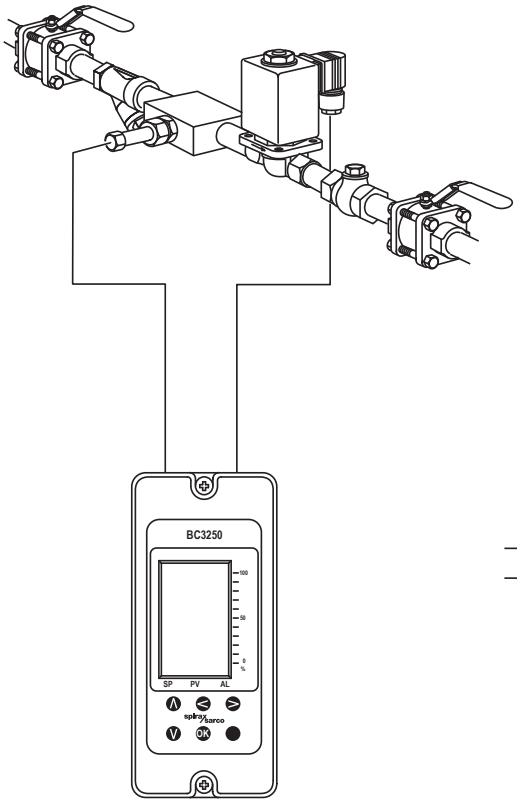

Fig. 9 BCS1 system - smaller boiler

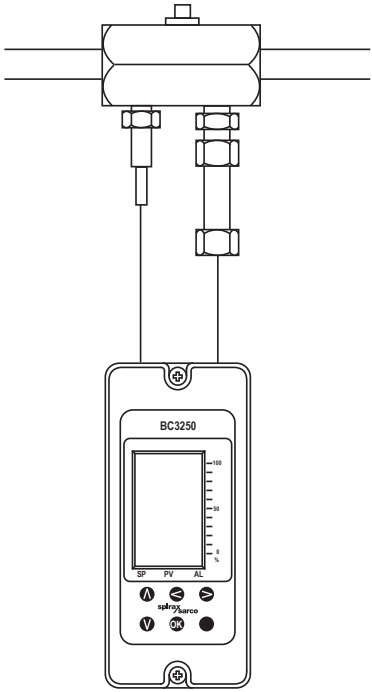

Fig. 10 BCS2 system - coil boiler

SHOPVALVES
GLOBAL VALVE SOLUTIONS | 阀门易购

SHOPVALVES
GLOBAL VALVE SOLUTIONS | 阀门易购

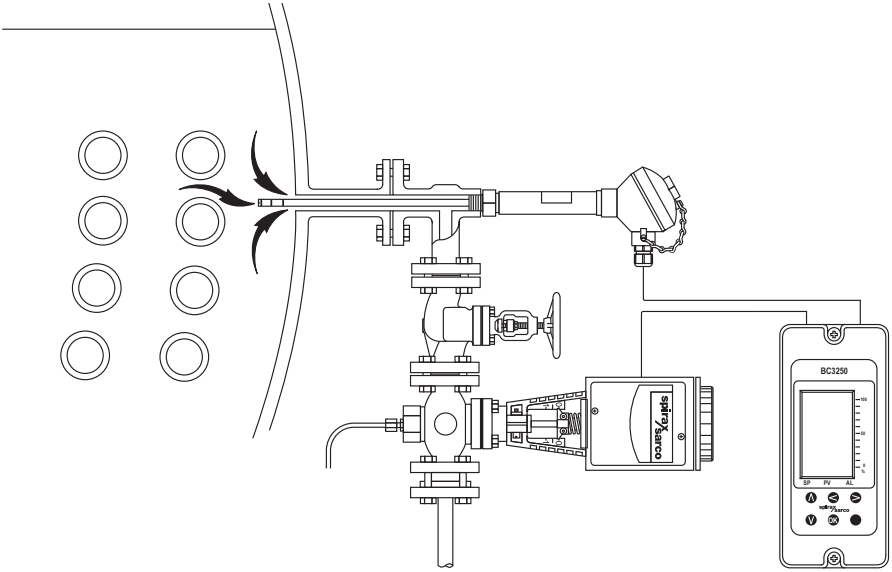

Fig. 11
BCS3 system - TDS control with integral take-off and continuous monitoring point from the side of the boiler.

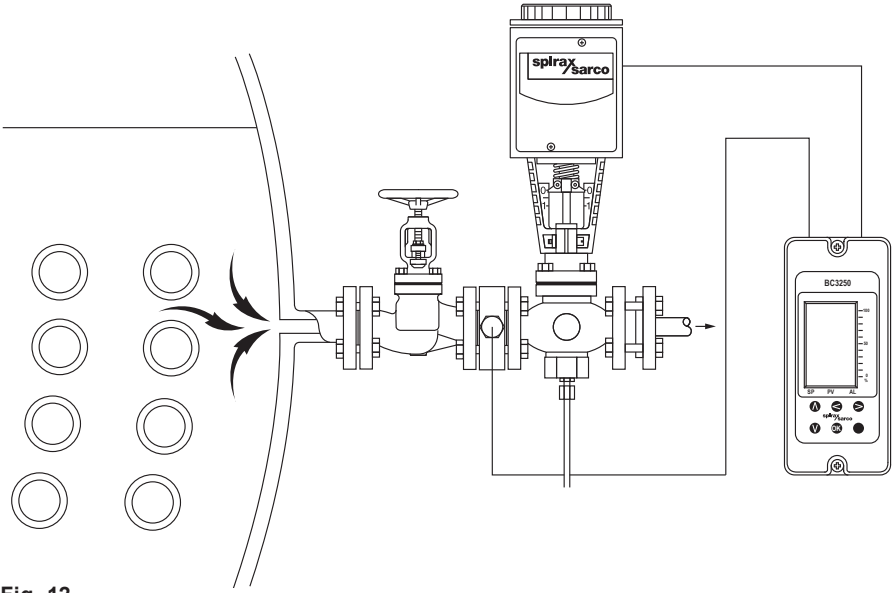

Fig. 12
BCS4 system - TDS control with intermittent monitoring point from the side or the bottom of the boiler.

SHOPVALVES
GLOBAL VALVE SOLUTIONS | 阀门易购

SHOPVALVES
GLOBAL VALVE SOLUTIONS | 阀门易购

3.6 Typical applications - Condensation contamination detection system (CCD)

System description

WARNING: Most countries have regulations that limit temperature and contamination levels for fluids being dumped to drain. It is essential to follow the guidelines issued by bodies such as the UK Health and Safety Executive.

The Spirax Sarco CCD system monitors and displays the conductivity of condensate return, and will redirect the flow to drain if the conductivity increases above a pre-set level to avoid contaminated water being returned to the boiler feedtank. It will not detect contaminants that do not change the conductivity, e.g. oils, fats, or sugars.

A conductivity sensor and a temperature sensor are mounted in a bypass line as shown in Figure 13. A check valve in the main line ensures a flow past the sensor under low flow conditions. The 500 mm head prevents flash steam flow in the bypass line. We recommend a 3-port diverter valve such as the Spirax Sarco QL. A spring retract pneumatic actuator is normally fitted to cause the valve to divert on failure of the air supply. Alternatively, two 2-port valves (M20, for example) may be used as shown in Figure 14, one as a spring-to-close isolating valve in the condensate return line, and one as a spring-to-open dump valve, in the drain line. On detection of high conductivity, the isolating valve closes and the dump valve opens, both under spring pressure. Suitable 3-port solenoid valves may be selected from the Spirax Sarco range, and are described in separate literature.

Fig. 13 CCD system

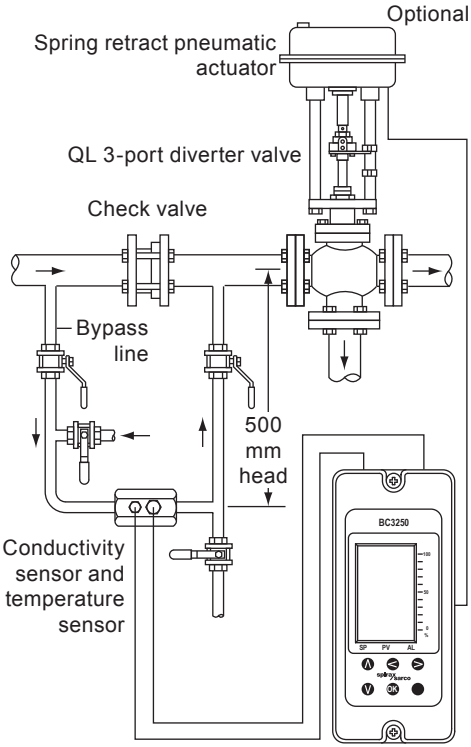

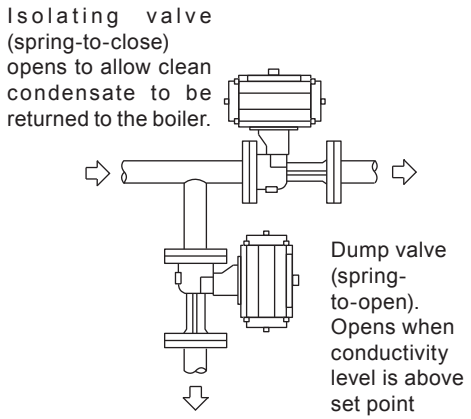

Fig. 14 Alternative arrangement of a CCD system using separate valves

SHOPVALVES
GLOBAL VALVE SOLUTIONS | 阀门易购

SHOPVALVES
GLOBAL VALVE SOLUTIONS | 阀门易购

4. Mechanical installation

Note: Read the 'Safety information' in Section 1 before installing the product.

The product must be installed in a suitable industrial control panel or fireproof enclosure to provide impact and environmental protection. A minimum of IP54 (EN 60529) or Type 3, 3S, 4, 4X, 6, 6P and 13 (UL50 / NEMA 250) is required. If installed in a harsh environment (conductive dust and / or wet conditions), extra protection is required.

During installation or maintenance, the rear of the product **must** be protected from environmental pollutants entering the product. Alternatively, the tasks can be performed in a dry clean environment.

Caution 1: The product must only be installed in the vertical orientation.

Caution 2: Do not cover or obstruct the infrared beam between products.

Ensure that the display can be easily read by the operator.

Warning: The boiler control panel or enclosure doors must be kept closed at all times unless installation or maintenance work is being carried out.

Do not attempt to open the product-it is sealed and has no replaceable parts or internal switches.

4.1 Environmental conditions

Install the product in an environment that minimises the effects of heat, vibration, shock and electrical interference (see Section 1 - 'Safety information').

Do not install the product outdoors without additional weather protection.

Do not attempt to open the product - it is sealed and has no replaceable parts or internal switches.

4.2 Installation on a DIN rail

The product is provided with a clip and a set of self-tapping screws to secure it to a 35 mm DIN rail. On the rear of the enclosure, two sets of holes are provided to give two height positions. The clip can be adjusted to give further positions. Locate the clip onto one set of holes and secure it using the two screws provided. Ensure the spring clip is fully engaged with the rail.

Warning: Only use the screws provided with the product.

SHOPVALVES
GLOBAL VALVE SOLUTIONS | 阀门易购

SHOPVALVES
GLOBAL VALVE SOLUTIONS | 阀门易购

4.3 Installation on a chassis plate:

- Drill holes in chassis plate as shown in Figure 15.
- Fit unit to chassis plate and secure with 2 screws, nuts and washers, using the slots provided at the top and bottom of the case.

Warning: Do not drill the product case or use self-tapping screws.

4.4 Installation in a panel cutout:

(Minimum panel thickness 1 mm if the bezel is used).

- The product has integral threaded inserts (M4 x 0.7) at the top and bottom of the front panel.
- Two M4 x 25 mm screws are provided, together with fibre washers and a bezel.

Warning:
Do not use screws over 25 mm in length - danger of electric shock.

- Cut the panel to the dimensions given in Figure 15. Drill the screw holes in the panel in the positions indicated.
- Remove the backing from the gasket supplied and apply to front face of the product.
- The bezel can be used to enhance the appearance of the panel cutout. If required, fit this to the outside of the panel.
- Fit the unit from the rear of the panel, and secure using the screws, washers (and bezel) provided.
- Tighten the M4 screws to 1.0 - 1.2 Nm.

Warning: Do not drill the product case or use self-tapping screws.

Fixing template cutout notes:

- Solid line indicates cutout required for panel mounting.
- Broken line indicates product outline.
- A minimum gap of 15 mm between units must be provided for product cooling.
- Mounting hole dimensions are the same for both panel and wall mounting.

SHOPVALVES
GLOBAL VALVE SOLUTIONS | 阀门易购

SHOPVALVES
GLOBAL VALVE SOLUTIONS | 阀门易购

Fig. 15
Chassis plate / panel - cutout diagram

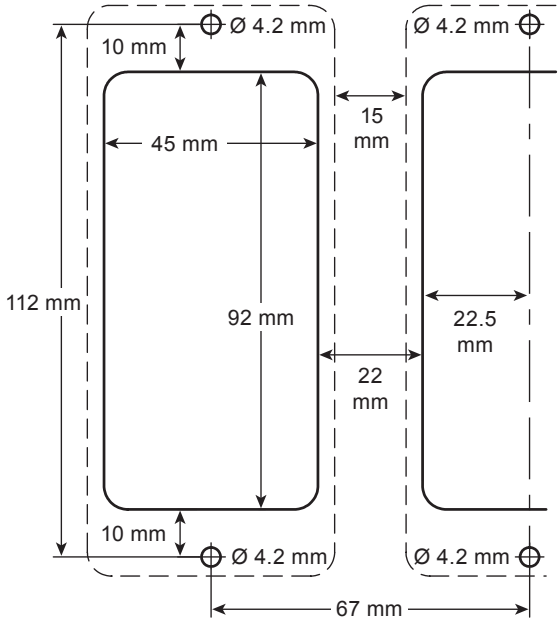

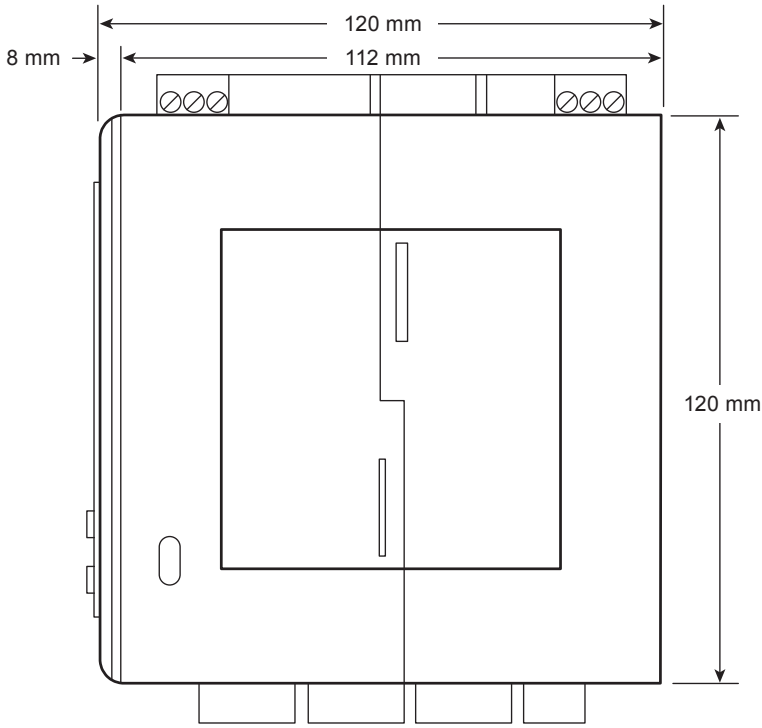

SHOPVALVES
GLOBAL VALVE SOLUTIONS | 阀门易购

SHOPVALVES
GLOBAL VALVE SOLUTIONS | 阀门易购

5. Electrical installation

Note: Before installing observe the 'Safety Information' in Section 1.

Warning:
Isolate the mains supply before touching any of the wiring terminals as these may be wired to hazardous voltages.
Use only the connectors supplied with the product, or spares obtained from Spirax Sarco Ltd. Use of different connectors may compromise product safety and approvals.
Connecting the mains supply incorrectly can cause damage and may compromise safety.

5.1 General wiring notes:

Every effort has been made during the design of the product to ensure the safety of the user but the following precautions must be observed:

1. Maintenance personnel must be suitably qualified to work with equipment having hazardous live voltages.
2. Ensure correct installation. Safety may be compromised if the installation of the product is not carried out as specified in this manual.
3. The design of the product relies on the building installation for overcurrent protection and primary isolation.
4. Overcurrent protection devices rated at 3 amps must be included in all phase conductors of the installation wiring. If overcurrent protection is included in both supply wires then the operation of one must also cause the operation of the other. Refer to IEC 60364 (Electrical Installations of Buildings) or National or local standards for full details of requirements for overcurrent protection.
5. A 1 A quick-blow overcurrent protection device must be fitted to the burner input if used.
6. A 3 A quick-blow overcurrent protection device must be fitted to the relay circuit(s).
7. Relay contacts must be supplied on the same phase as the mains supply.
8. The product is designed as an installation category III product.
9. Install wiring in accordance with:
   - IEC 60364 - Low-voltage electrical installations.
   - EN 50156 Electrical Equipment for furnaces and ancillary equipment.
   - BS 6739 - Instrumentation in Process Control Systems: Installation design and practice or local equivalent.
   - National and Local Electrical Code (NEC) or Canadian code (CEC) for the US and Canadian markets. **Note:** use NEC Class 1 wire with a temperature rating greater than 75 °C. If the cable is to be exposed to a higher temperature, then a higher temperature rating needs to be selected.

SHOPVALVES
GLOBAL VALVE SOLUTIONS | 阀门易购

SHOPVALVES
GLOBAL VALVE SOLUTIONS | 阀门易购

10. It is important that the cable screens are connected as shown in order to comply with the electromagnetic compatibility requirements.

11. All external circuits must meet and maintain the requirements of double / reinforced installation as stated in IEC 60364 or equivalent.

12. Additional protection must be provided to prevent accessible parts (e.g. signal circuits) from becoming Hazardous Live if a wire or screw is accidentally loosened or freed. Ensure all wires are secured to at least one other wire from the same circuit. The attachment must be as close to the terminal block as possible but must not apply undue stress on the connection. Example: Use a cable tie to secure the live and neutral wire together.
If one wire becomes loose the other wire will prevent it from touching accessible parts.

13. A disconnecting device (switch or circuit breaker) must be included in the building installation. It must:

- Have a rating with sufficient breaking capacity.
- Be in close proximity to the equipment, within easy reach of the operator.
- Not be fitted in a position that makes it difficult to operate.
- Disconnect all phase conductors.
- Be marked as the disconnecting device for the product.
- Not interrupt a protective earth conductor.
- Not be incorporated into a mains supply cord.
- Comply with the requirements for a disconnecting device specified in IEC 60947-1 (Specification for low-voltage switchgear and control gear - General rules) and IEC 60947-3 (Switches, disconnectors, switch-disconnectors and fuse-combination units).

14. See Section 10 - 'Technical Information' for terminal and cable specification.

SHOPVALVES
GLOBAL VALVE SOLUTIONS | 阀门易购

SHOPVALVES
GLOBAL VALVE SOLUTIONS | 阀门易购

5.2 Mains wiring notes:

1. Read Section 5.1 before attempting to wire the supply to the product.
2. The wiring connections are identified on the terminal plugs.
3. Fuses should be fitted in all live conductors.
4. Double or reinforced insulation must be maintained between:
   - Hazardous live conductors (mains and relays circuits) and
   - Safety extra low voltages (All other components / connectors / conductors).
5. The wiring diagrams show relays and switches in the **Power Off** position.
6. Where the probe is fitted in the blowdown line and a purge is required 10 – 60 minutes of boiler firing (cumulative), connect a live supply from the burner control to the burner input. This supply should be live whenever the burner is firing – see Wiring Diagram.

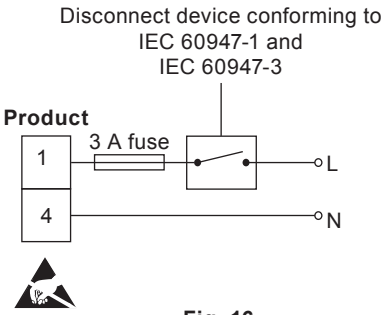

Fig. 16

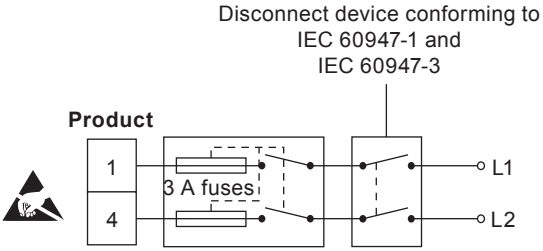

Fig. 17

SHOPVALVES
GLOBAL VALVE SOLUTIONS | 阀门易购

SHOPVALVES
GLOBAL VALVE SOLUTIONS | 阀门易购

5.3 Blowdown valve wiring notes:

Note: The protective earth must be connected in accordance with National or Local regulations

Viewed from the underside, relays are shown in the power off position

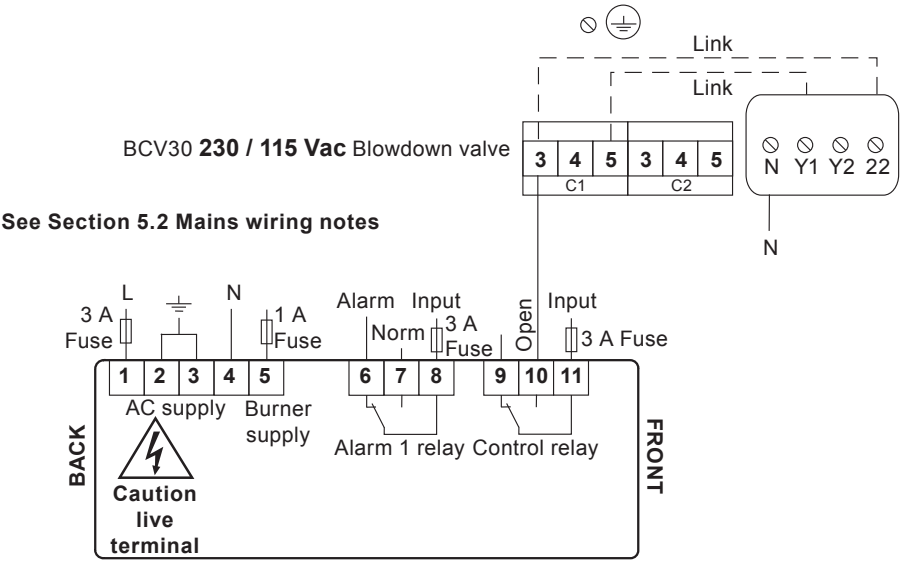

Fig. 18 BCV30 230 / 115 Vac blowdownvalve

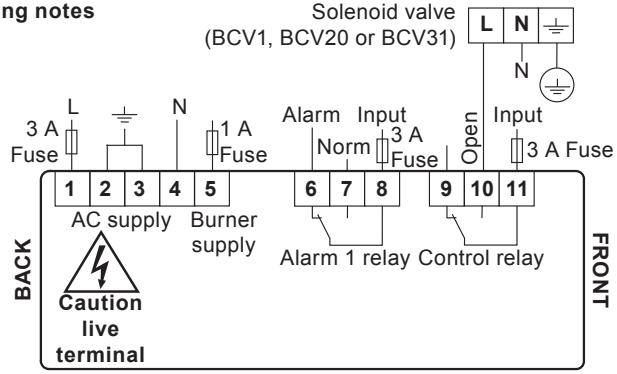

Fig. 19 BCV1, BCV20 or BCV31 solenoid valves

SHOPVALVES
GLOBAL VALVE SOLUTIONS | 阀门易购

SHOPVALVES
GLOBAL VALVE SOLUTIONS | 阀门易购

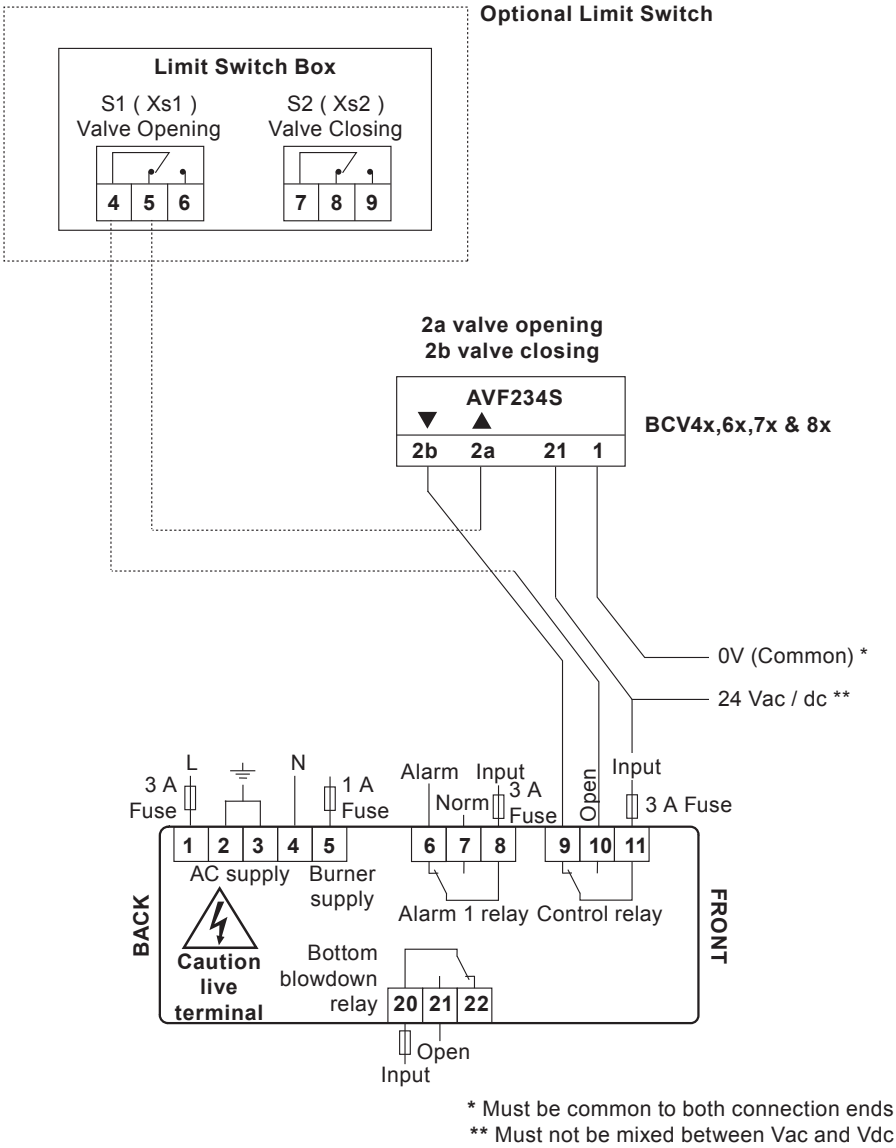

Fig. 20 BCVxx Blowdown Valves with 24 Vac / dc Supply 2cable / 3pt

SHOPVALVES
GLOBAL VALVE SOLUTIONS | 阀门易购

SHOPVALVES
GLOBAL VALVE SOLUTIONS | 阀门易购

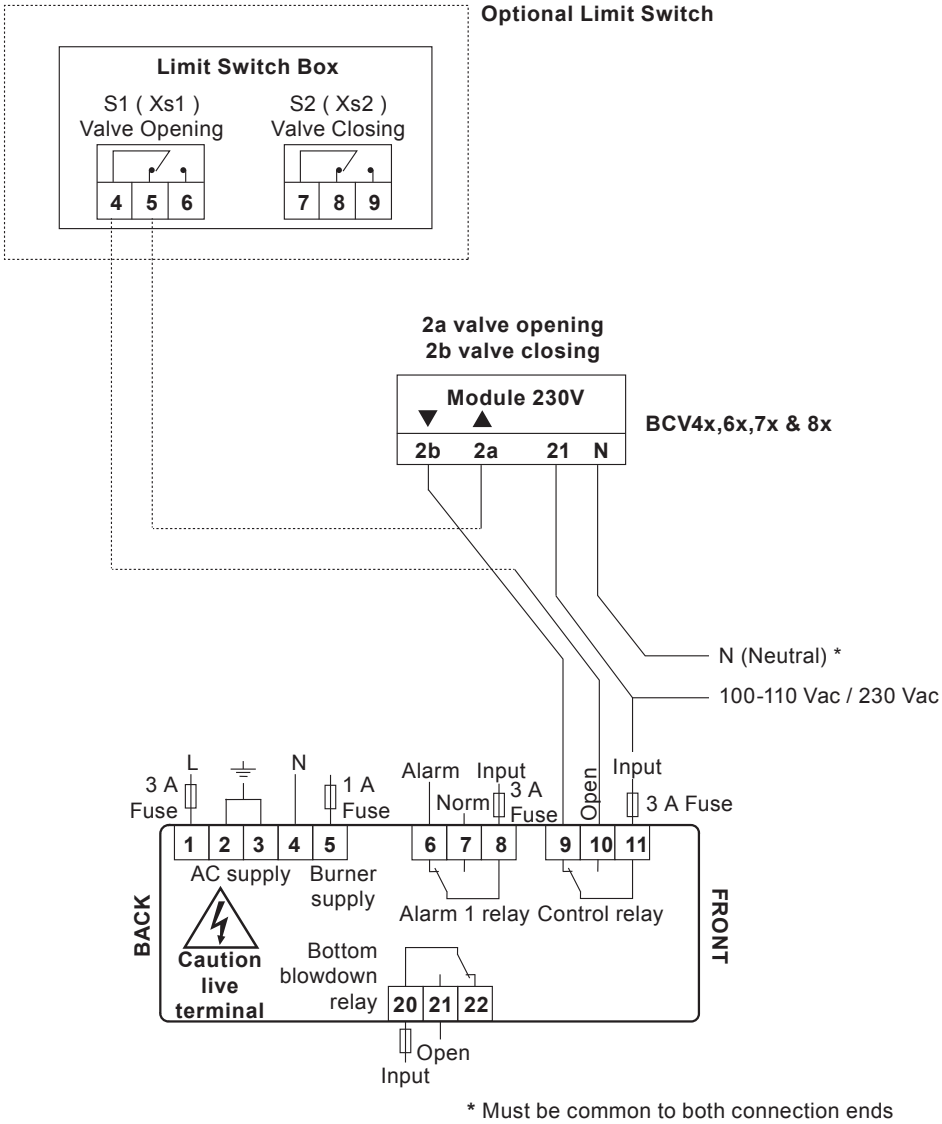

Fig. 21 BCVxx Blowdown Valves with 100-110 Vac / 230 Vac Supply 2cable / 3pt

SHOPVALVES
GLOBAL VALVE SOLUTIONS | 阀门易购

SHOPVALVES
GLOBAL VALVE SOLUTIONS | 阀门易购

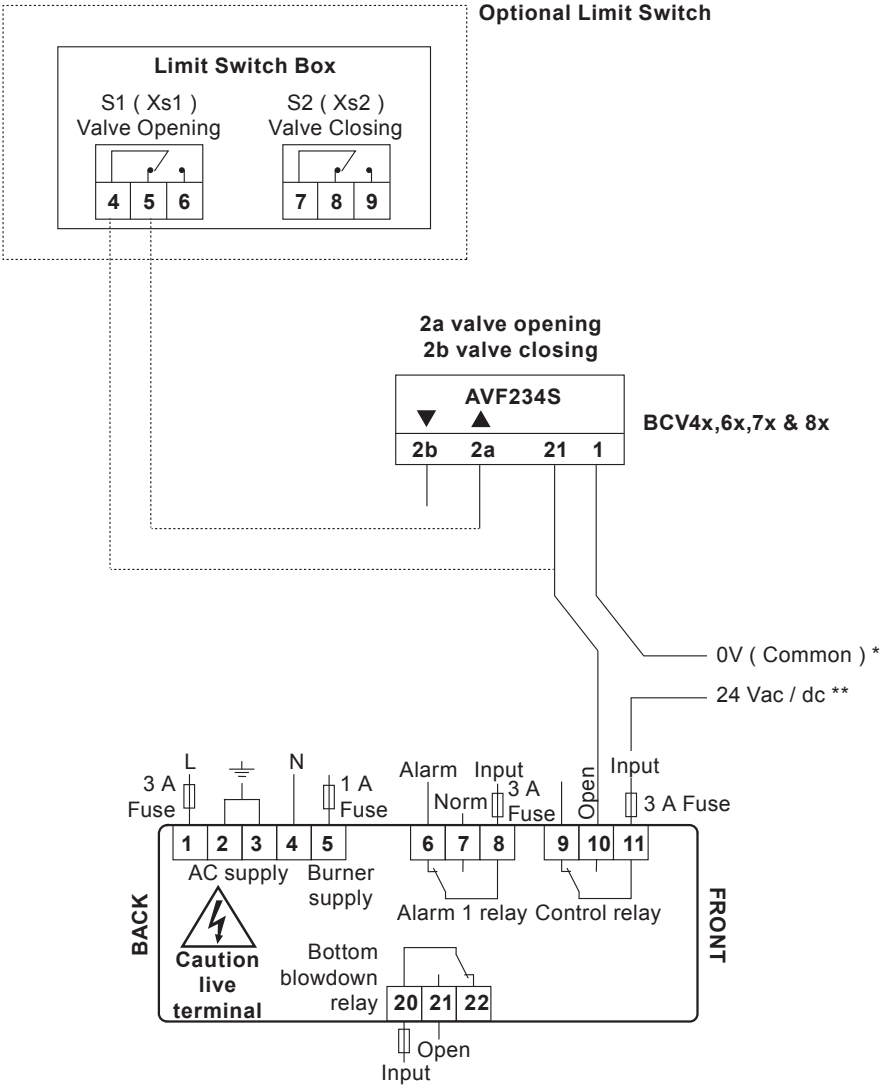

Fig. 22 BCVxx Blowdown Valves with 24 Vac / dc Supply 1 cable / 2pt

SHOPVALVES
GLOBAL VALVE SOLUTIONS | 阀门易购

SHOPVALVES
GLOBAL VALVE SOLUTIONS | 阀门易购

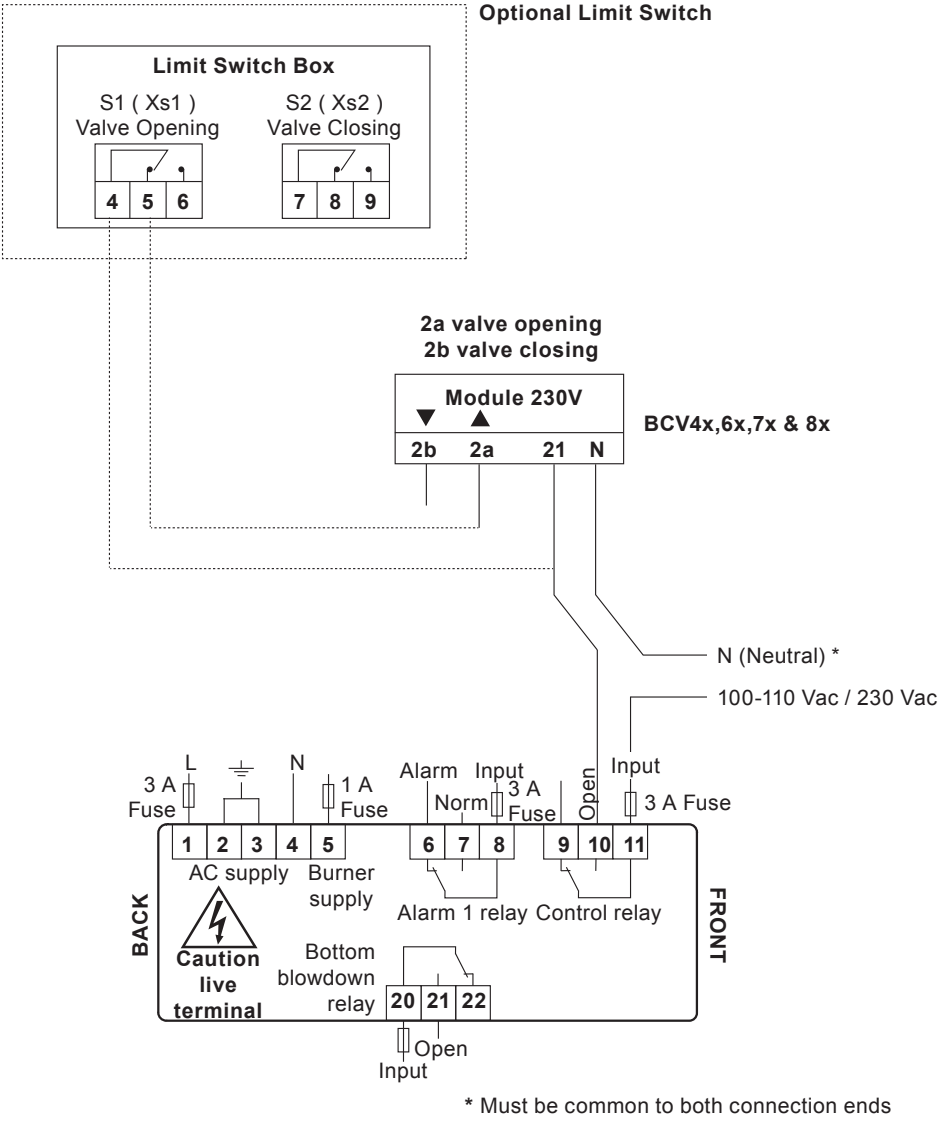

Fig. 23 BCVxx Blowdown Valves with 100-110 Vac / 230 Vac Supply 1 cable / 2pt

SHOPVALVES
GLOBAL VALVE SOLUTIONS | 阀门易购

SHOPVALVES
GLOBAL VALVE SOLUTIONS | 阀门易购

5.4 Signal wiring notes

See Section 10, Technical Information, for terminal and cable specification.

An earth current loop is created if a wire or screen is connected between two earth points that are at different potential (voltage). If the wiring diagram is followed correctly, the screen will only be connected to the earth at one end.

The earth terminal is a functional earth rather than a protective earth.

A protective earth provides protection from electric shock under a single fault condition. A functional earth is used in order for the product to operate. In this application, the functional earth is used as a sink or drain for any electrical interference. The earth terminal must be connected to a local earth in order to conform to the EMC directive.

5.5 Probe wiring

The maximum cable length for all probes is 100 m (9990 and 999.0 ranges), 10 m (9.990 range) or 30 m (99.90 range). All cables must be of the same gauge.

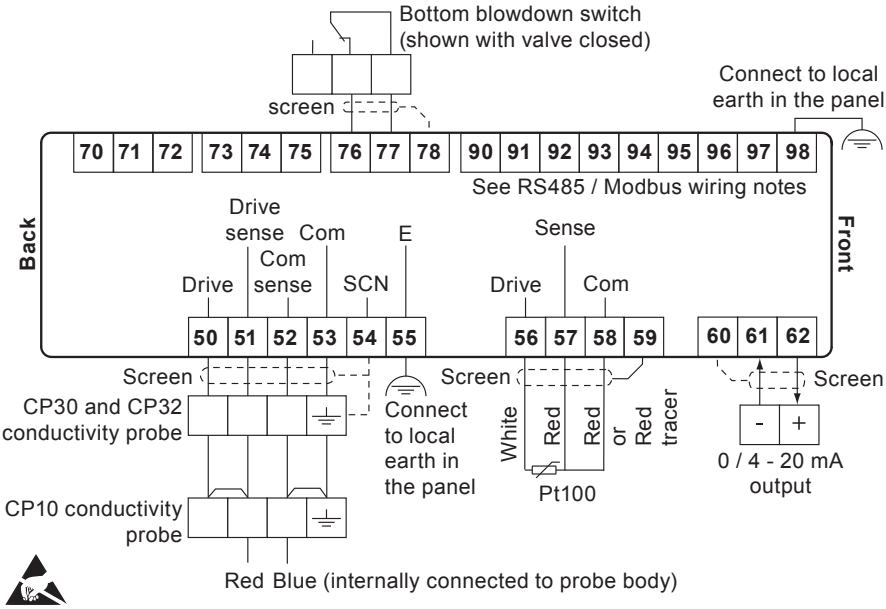

Note:
Do not connect terminals 53, 54, 59, 60 or 78 to any other earth.
Ensure that resistance from the probe body to the pipework / boiler shell is less than 1 ohm.
E = Functional earth. Connect these pins to earth local to the panel.

Fig. 24 Signal circuit (view from the top)

SHOPVALVES
GLOBAL VALVE SOLUTIONS | 阀门易购

SHOPVALVES
GLOBAL VALVE SOLUTIONS | 阀门易购

5.6 Probe in blowdown (or condensate) line - CP10

For most applications the 1.25 m (4 ft) heat resisting probe cable will need to be extended using a junction box. If not, link terminals 50 to 51, and 52 to 53.

Note: Whilst pairs of conductors are linked at the junction box, the four-wire connection is required to compensate for voltage drop. See the Information and Maintenance Instructions for the CP10 for further details.

5.7 Probe in boiler - CP30

The probe requires a 4 core screened cable connection.

Whilst pairs of conductors are linked at the probe, the four-wire connection compensates for voltage drop along the cable. The CP30 UL recognized probe is supplied with four 18 AWG, 12" long colour coded flying leads. These are to be cut to length and wired to a suitable terminal block housed in a suitable metal box. A length of flexible metal conduit is required between the probe and the terminal box to provide environmental and impact protection, and easy electrical connection. The cable socket is provided with a ½" NPT conduit adaptor for this purpose.

See the Information and Maintenance Instructions for the CP30 for further details.

5.8 Probe in boiler - CP32

The probe requires 8-way screened cable.See the Information and Maintenance Instructions for the CP32 for further details.

Caution: Do not connect any wires to the CP32 5-way terminal block, as it houses the very fine wiring from the probe, which could be easily damaged in attempting to connect additional wires.

5.9 TP20 Temperature probe wiring

Note: For the TP20, when the cable is to be longer than the 1.25 m (4 ft) supplied, a junction box and 3 core-screened cable will be needed.

Colour codes for sensor wires vary, but a three-wire sensor will normally have 2 wires of one colour, and 1 wire of a different colour.

5.10 Four wire Pt100

Will have two wires one colour, and two wires of another colour.
Link one of the pairs at the junction box, and connect to terminal 56.
Connect one of the remaining two wires to terminal 57, and the other to terminal 58.

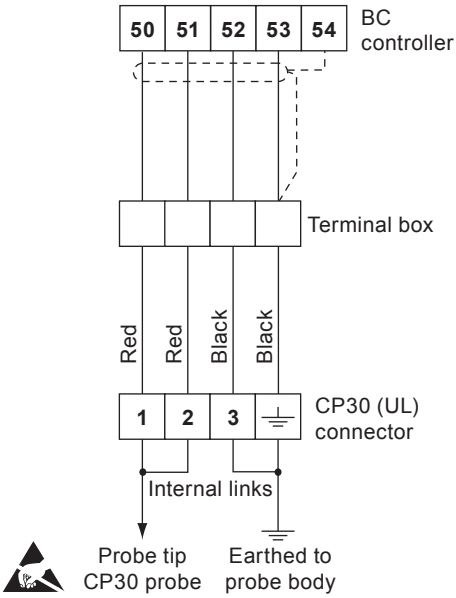

Fig. 25 Alternative wiring for the UL version

SHOPVALVES
GLOBAL VALVE SOLUTIONS | 阀门易购

SHOPVALVES
GLOBAL VALVE SOLUTIONS | 阀门易购

5.11 EIA / TIA-485 communication wiring diagram

The product can be connected as a slave to a two or four-wire EIA / TIA-485 multi-drop network.

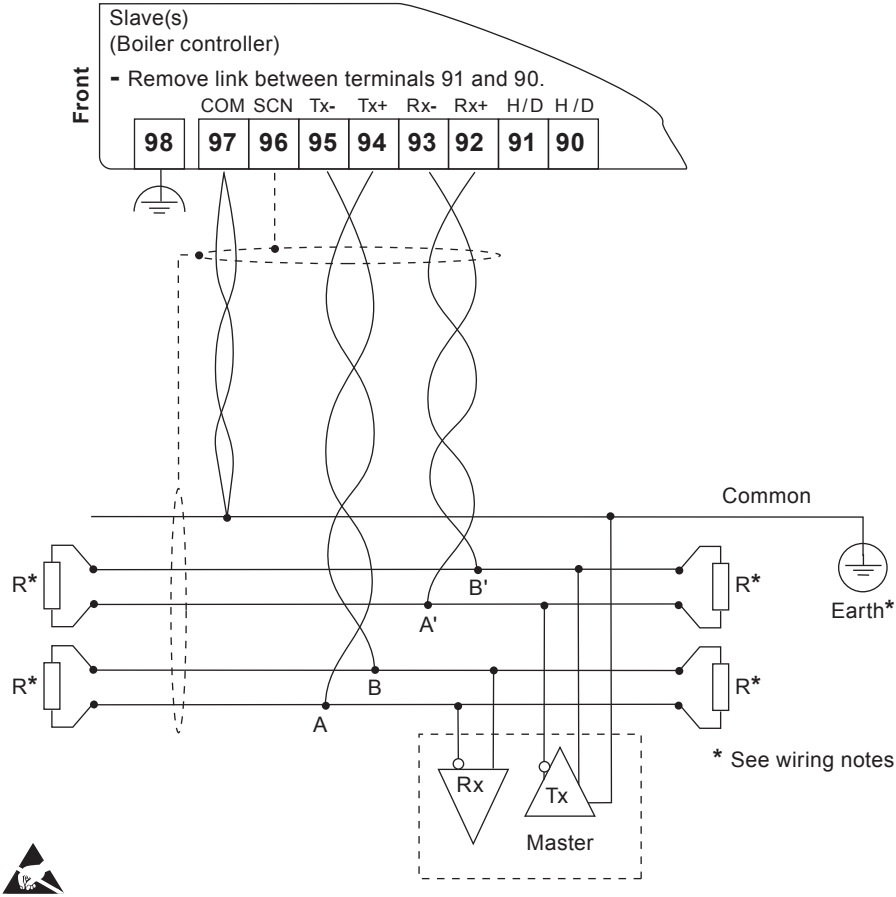

Fig. 26 RS485 / Modbus full duplex circuit (view from the top)

EIA / TIA-485 wiring notes:

EIA / TIA-485 symbols are used (A = Tx-, B = Tx+ and A' = Rx-, B' = Rx+)

The signal direction is relative to the product being the Modbus slave, i.e. Tx+ from the product (slave) is to be connected to the Rx+ of the master.

- Twisted pair cable should not be required for short lengths of cable < 1.5 m (< 5 ft). Standard screened cable should suffice.
- The H / D (Half duplex) pins are used to select two or four-wire Modbus:
  i) For two-wire mode, connect terminal 91 and 90 together.
  ii) For four-wire mode, **do not connect terminals 91 and 90 together.**

Continued on page 35

SHOPVALVES
GLOBAL VALVE SOLUTIONS | 阀门易购

SHOPVALVES
GLOBAL VALVE SOLUTIONS | 阀门易购

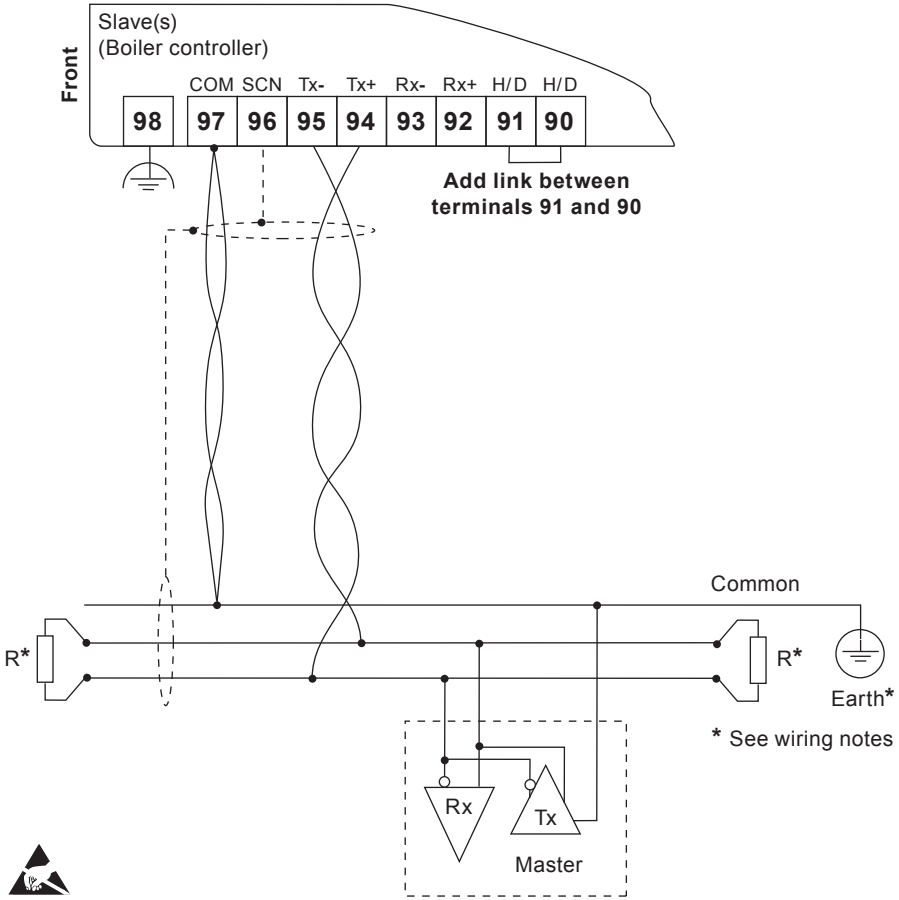

Fig. 27 RS485 / Modbus half duplex circuit (view from the top)

EIA / TIA-485 wiring notes continued:

- The bus common must be connected directly to protective ground / earth at one point only. Generally this point is at or near the master device.
- Consider terminating the two furthest ends of the bus to match the transmission line impedance. A 150 ohm (0.5 W) resistor or a 120 ohm (0.25 W) resistor, in series with a 1 nF (10 V) capacitor is commonly used, but ideally the line impedance should be matched to each individual installation. Termination for short lengths of cable should not be necessary < 300 m (< 1 000 ft) @ 9 600 Baud.
- See Section 10 - 'Technical information' for cable details.

SHOPVALVES
GLOBAL VALVE SOLUTIONS | 阀门易购

SHOPVALVES
GLOBAL VALVE SOLUTIONS | 阀门易购

6 .Commissioning

6.1 General information

All commissioning for the product is carried out using the front panel.

WARNING: On entering the commissioning mode the product will cease normal control. All valves will close, the 4-20 mA and the timer will freeze. For safety reasons, the alarm relay(s) will continue to operate as normal. To regain normal control, return to the run menu by pressing the button.

WARNING: If during commissioning, the keys are not pressed for a period of greater than 5 minutes, the controller will revert back to run mode and an error will occur. If the calibration was incomplete the controller may not provide the correct control.

The product has no battery. The programmed settings are held in non-volatile memory (Flash) and are written to after changing a parameter and pressing OK.

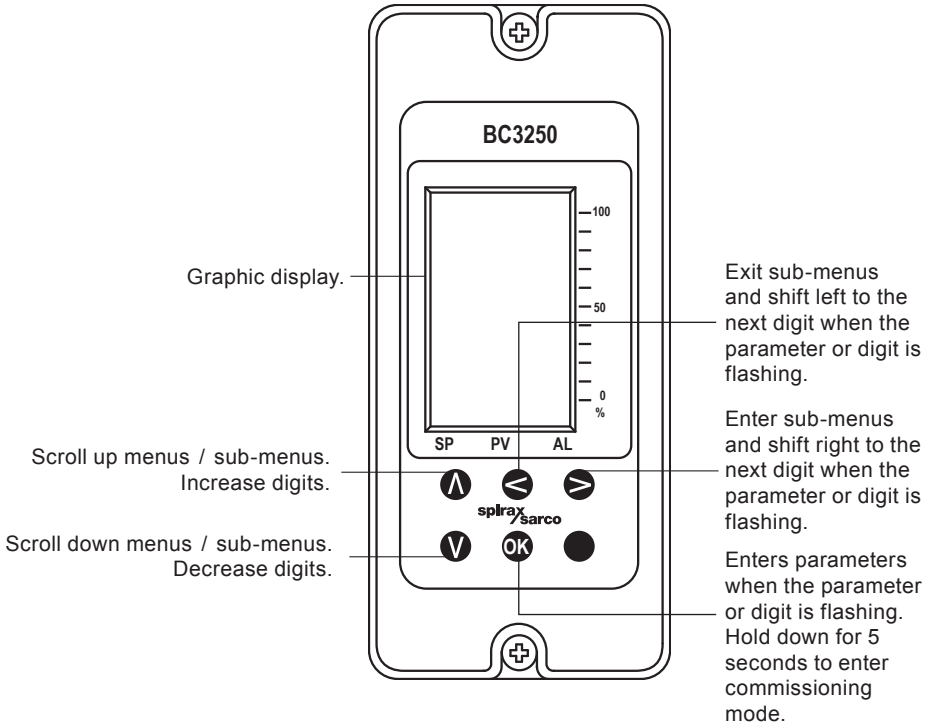

Fig. 28 Front panel keypad and definitions

SHOPVALVES
GLOBAL VALVE SOLUTIONS | 阀门易购

SHOPVALVES
GLOBAL VALVE SOLUTIONS | 阀门易购

6.2 Commissioning mode navigation

After the correct pass code has been entered the display shows:

MODE

To exit the commissioning mode at any stage, press and hold the button to return to the run mode.

Pressing the and buttons scrolls through the various first level menus.

Pressing the button enters a particular sub-menu. The first menu title will remain displayed at the top of the screen and the new sub-menu will appear on the next line. As you progress through the menu, the longer the list becomes. This aids navigation of the menu structure.

6.2.1 Changing parameters

If a particular sub-menu requires a parameter to be modified, the corresponding units (if any) will appear on the next line (in brackets) and the parameter itself will appear on the bottom right hand corner. The first digit will start flashing and the parameter can be modified as described in the previous section (See the adjacent example).

INPUT
T COMP
(°C)

200

SHOPVALVES
GLOBAL VALVE SOLUTIONS | 阀门易购

SHOPVALVES
GLOBAL VALVE SOLUTIONS | 阀门易购

6.3 Commissioning - Quick set-up

This section allows the user to carry out the minimum commissioning necessary to operate the system.

It accepts the defaults set in the factory, so will only work if the original default settings have not been altered. See the default settings in Section 10, Technical information, to confirm.

Settings can then be tailored to suit the individual requirements of the customer / application if required.

Warning: - It is essential that you comply with National / Local regulations and Guidance notes, and the boiler manufacturer's recommendations. It is imperative that the settings you have accepted will allow the boiler to operate in a safe manner.

This procedure assumes a Pt100 temperature sensor is fitted to the system.

Parameter	Action
CAL	Enter actual water TDS or conductivity to calibrate product and press the OK button to enter run mode.
DURATION	Enter time (S) for the bottom blowdown valve to be open and press the OK button to enter run mode.
SET POINT	Set to TDS at which blowdown valve is to open and press OK.
ALARM	Set to TDS at which the alarm is to operate and press OK (must be higher than SP).

Test the system to ensure that it is working correctly.

SHOPVALVES
GLOBAL VALVE SOLUTIONS | 阀门易购

SHOPVALVES
GLOBAL VALVE SOLUTIONS | 阀门易购

6.4 Commissioning - Full

Sub-menus and their functions are outlined within this section, and enables the user to programme the unit. Additional information is given in the sub-menu notes where further choices can be made.

6.4.1 Main menu structure

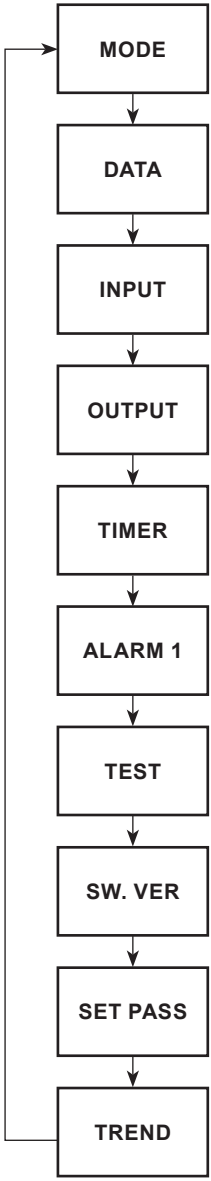

Allows the user to view and change the valve status (OPEN or CLOSED).
See MODE sub-menu.

Allows displayed units to be configured.
See DATA sub-menu.

Configures the input type and commissioning parameters.
See INPUT sub-menu.

Configures the outputs.
See OUTPUT sub-menu.

Allows the user to set bottom blowdown time.
See TIMER sub-menu.

Configures the high alarm.
See ALARM sub-menu.

Allow the product to test various functions.
See TEST sub-menu.

Indicates the software version.

Allows the user to set their own password.

Shows historical conductivity level graphically.
Time base can be selected - minutes, hours or days.

SHOPVALVES
GLOBAL VALVE SOLUTIONS | 阀门易购

SHOPVALVES
GLOBAL VALVE SOLUTIONS | 阀门易购

6.4.2 MODE sub-menu

Allows the user to switch from automatic or manual control of the valve.

Entering this menu (press the > button) will always show 'CLOSE' – flashing. The the ∧ and ∨ buttons will toggle the state and can be selected by pressing the OK button.

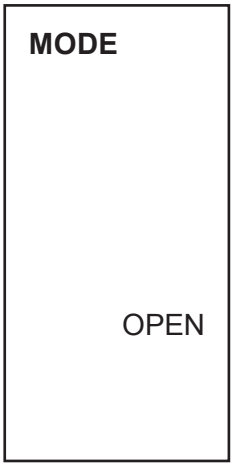

To exit the submenu and return to the run mode, press the < button. On exit the valve will revert to 'CLOSE' position.

6.4.3 DATA sub-menu

Allows measurement units to be changed – (operating temperature, TDS or conductivity measurement), and the conversion factor to be changed.

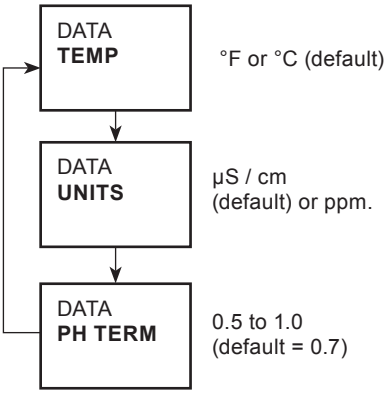

PH term

Used to compensate for the changes in water conductivity due to pH. In the UK, it is recommended that boilers operate at a pH of 10.5 – 12. During the calibration procedure, the water sample is neutralised, typically changing the conductivity by a factor of 0.7. This factor is the 'pH TERM'.

$$\text{pH TERM} = \frac{\text{Neutralised } (\mu S \ / \ cm)}{\text{Un - neutralised } (\mu S \ / \ cm)}$$

With higher-pressure boilers or where countries require a different pH, the actual factor / pH TERM can be calculated and entered.

Example: A water sample measures 6122 µS / cm (un-neutralised) and 3061 µS / cm (neutralised) at 25 °C. Enter a pH TERM of '0.50'.

If the calibrated conductivity value is an unneutralised reading, set pH term = 1.00

SHOPVALVES
GLOBAL VALVE SOLUTIONS | 阀门易购

SHOPVALVES
GLOBAL VALVE SOLUTIONS | 阀门易购

6.4.4 INPUT menu

Allows selection of the type of measurement to be performed.

INPUT **T COMP**

Temperature compensation.
If no Pt100 is fitted, a constant temperature can be entered.
e.g. 184 °C (default).

INPUT **TDS**

Allows selection of all the TDS control features: Sensor type, purge, filter, range, set point, hysteresis, calibration, and calibration interval.

6.4.5 INPUT – TDS sub-menu

INPUT TDS **SENSOR**

Selects the sensor type – CP10, CP30 or CP32. If a CP32 is fitted and selected the user can select **'flt mode'** – 'action on fault': OFF, ALARM, CLEAN, or AL + CLEAN. See INPUT – TDS – SENSOR – FLT MODE notes.

INPUT TDS **PURGE**

Selects the purge **duration** when the sensor is in the pipeline – See Purge sub-menu notes.

INPUT TDS **FILTER**

This feature is only shown if no purge time is selected, i.e. probe in boiler. Increases the damping effect on the probe output. If the probe is installed directly in the boiler, select ON. Filter ON – 64 seconds (default) or OFF, which gives an 8 second delay.

INPUT TDS **RANGE**

Sets range, 9.990, 99.90, 999.0 or 9990, for ppm or µS / cm.

INPUT TDS **SP**

Set point. The conductivity value at which the blowdown valve will open. 0 – 100% FS, 1% resolution.

INPUT TDS **HYST**

Select a hysteresis value (dead-band) to prevent over-frequent valve operation in a turbulent boiler.
Hysterisis – 5% (default), 0 – 100% FS, 1% resolution.
Example:- SP = 3000 ppm - 5% hysterisis = 150 ppm.
The valve will open at 3000 ppm and close at 2850 ppm.

INPUT TDS **CAL**

The calibration figure is found by sampling the boiler water. This figure is used to calibrate the controller in µS / cm or ppm.
See INPUT – TDS – CAL notes.

INPUT TDS **CAL INT**

Calibration interval – a countdown timer to remind the user to recalibrate the system. Can be configured in 1-26 week steps. If 0 CAL INT is not active.

SHOPVALVES
GLOBAL VALVE SOLUTIONS | 阀门易购

SHOPVALVES
GLOBAL VALVE SOLUTIONS | 阀门易购

6.4.6 INPUT sub menu notes

6.4.6.1 INPUT – TDS – SENSOR – FLT MODE

Only shown if the CP32 probe is selected.
Allows selection of the action to be taken if the probe detects a fault.

'OFF' No action.

'CLEAN' If the probe is scaled then the time between probe conditioning cycles will change from the CLEAN-INTERVAL time set to 10 minutes, until the probe is clean. The display will flash 'CLEANING' during the conditioning cycle.

'ALARM' Alarm relay released, and the display will flash 'SCALED'.

'AL + CLEAN' Recommended setting – alarm relay released, display shows 'SCALED', and the probe conditioning circuit is activated.

The fault will be recorded in the error menu. **Caution:** The probe may be damaged if 'cleaning every 10 minutes' is allowed to continue for long periods. The probe should be examined and mechanically cleaned after 12 hours of 'fault condition'.

Note: Certain probe / wiring faults will also trigger the probe scale detect feature.

6.4.6.2 INPUT – TDS – PURGE

Used only when the probe is mounted in the blowdown line, **Purge** ensures the sensor measures the conductivity at boiler temperature.

Note
If the purge time is set to any figure other than zero, the controller will automatically limit the cleaning (conditioning) time to 9 seconds (max.) to avoid bubbles forming on the probe during the purge, and causing an inaccurate reading. The display will also only be updated when the blowdown valve is open. This means that when the controller is switched on, the display will show the last valid reading until the next purge.

6.4.6.3 INPUT – TDS – PURGE – DURATION

The duration is the time the valve is open to enable a representative boiler sample to reach the probe. The duration time is set to zero if the probe is installed in the boiler or for a CCD system. On BCS1 and BCS4 systems, 30 seconds is normally sufficient time to ensure the sensor reaches boiler temperature. Where a slow-opening valve is used, or where there is long or large bore pipework between the boiler and the sensor, a longer purge time will be required. Alternatively the time can be manually entered from 000 (default) to 180 seconds in 1-second steps.

To manually find the best purge time:

- Allow the blowdown pipework to cool for 15 minutes.
- Set the purge time to 60 (or greater if required) and calibrate the controller.
- Note the time taken for the display to stabilise. Set this time as the purge time. Enter a manual duration time from 000 (default) to 180 seconds in 1-second steps.

6.4.6.4 INPUT – TDS – PURGE – INTERVAL / BURNER

Note: This feature is not visible if the duration is set to zero (i.e. sensor in boiler). Interval is the time between purges.
Interval can be set between 10 to 60 minutes either independent of burner firing, (**normal**) or dependant on cumulative boiler firing time (**cumulative**).

SHOPVALVES
GLOBAL VALVE SOLUTIONS | 阀门易购

SHOPVALVES
GLOBAL VALVE SOLUTIONS | 阀门易购

6.4.6.5 INPUT - TDS - CAL

The boiler must be at working temperature when calibrating a system. This is particularly important if a temperature sensor is not fitted.

To ensure accuracy, the figures entered for both Set Point and Calibration must be greater than 10% of the chosen range. For the best accuracy, calibrate the controller with the TDS as close as possible to the Set Point. In some cases the boiler may need to be run for a period of time to allow the TDS to build up before calibration. Recalibrate the boiler at the Set Point once the boiler has settled down (after a few days in most cases). Check the calibration (as close to the Set Point as is practical) weekly to ensure optimum performance.

Take a sample of the boiler water and measure its conductivity (in µS / cm) using a meter such as the Spirax Sarco MS1. If the controller is required to be calibrated as neutralised conductivity or TDS, neutralise the sample and measure again using the meter.

Enter the measured sample and press the ok button. 'CAL' will be displayed for the purge time (if set) or for 1 minute (if purge = 0s). At the end of this period the calculated cell / probe factor (K) will be displayed for 5 seconds. The menu will revert back to the normal run time menu (PV) or if in commission menu, INPUT-TDS-CAL INT.

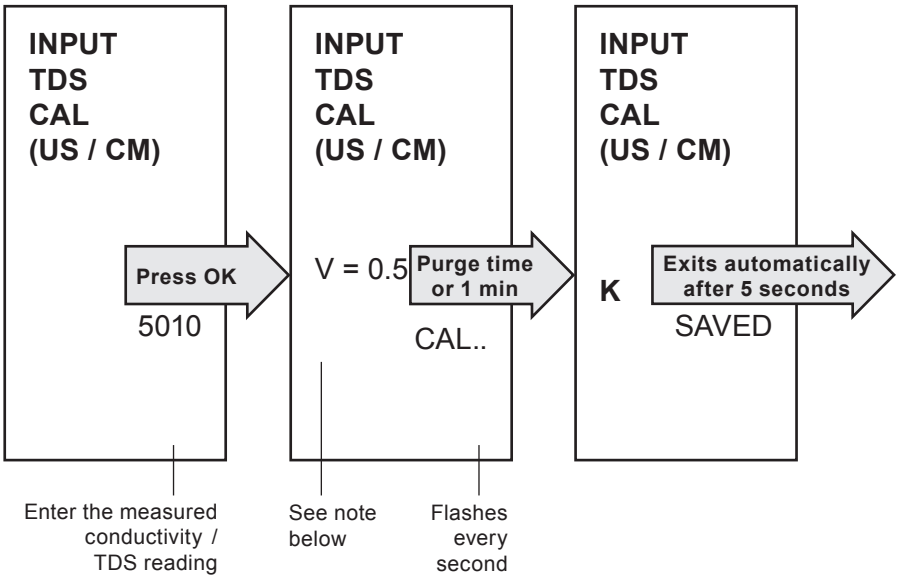

SHOPVALVES
GLOBAL VALVE SOLUTIONS | 阀门易购

SHOPVALVES
GLOBAL VALVE SOLUTIONS | 阀门易购

If the cell / probe factor is outside normal range (0.20- 0.70), 'WARNING' will be displayed.
If the cell / probe factor is excessive (< 0.01 or > 1.00), 'ERROR' will be displayed.
See Section 9, Fault Finding.

INPUT **TDS** **CAL** **(US / CM)** **WARNING:** **K = 0.75** **SAVED**	**or**	**INPUT** **TDS** **CAL** **(US / CM)** **ERROR:** **K = 1.00** **SAVED**

Note: If the calibration is accessed via the commissioning mode, the input voltage from the probe circuit is displayed during 'CAL ..'. This ranges from 0 - 2.500 V and is used for diagnostic purposes. The valve varies with conductivity, temperature and probe condition / installation.

Probe in blowdown line
The correct purge time needs to be selected first to ensure the sensor measures conductivity at boiler temperature. Enter the valve of measured sample and press the OK button. The controller will start a purge cycle and record the conductivity of the boiler water at the end of the purge time.

Probe in a CCD system:
We recommend that a competent water treatment company be consulted to establish the most suitable conductivity level for individual plant. Conditions vary widely, as do the chemical properties and conductivity of contaminants.
In many cases, the normal measured value of 'clean' condensate will be very low, perhaps only 1 or 2 µS / cm in some cases, whereas the set point may be much higher, perhaps 30 or 40 µS / cm.
To calibrate a CCD system, a liquid at approximately the maximum allowable conductivity is introduced into the system. Use a mixture of tap water and condensate, to simulate condensate at approximately the maximum allowable conductivity level (the set point). 5 litres (1.3 US gallons) will be plenty for most systems. Use the Spirax Sarco MS1 conductivity meter to check the conductivity. Close both stop valves and open the drain valve and 'water for flushing and calibration' valve. Pour in the prepared water, and let it run through the system until bubble free. Close the drain valve. Allow the display to settle for two minutes.
Calibrate the controller as described in the main text. It is advisable to check calibration after the system has been running for a few days, then periodically depending on the individual plant conditions. Consult your water treatment specialist if in any doubt.
Note: Ensure purge time is set to zero and a Pt100 is installed.

SHOPVALVES
GLOBAL VALVE SOLUTIONS | 阀门易购

SHOPVALVES
GLOBAL VALVE SOLUTIONS | 阀门易购

6.4.7 OUTPUT sub-menu

Allows the selection of the type of measurement to be performed.

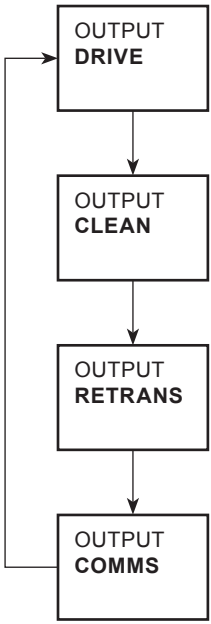

Selects standard or pulsed. Standard (valve remains open during blowdown cycle – default). Pulsed – valve open 10 seconds, closed 20 seconds. Pulsed prevents the water level from falling too quickly in a small boiler, which could cause a low water alarm.

Sets the probe cleaning cycle duration, interval, and pulsed or constant. Removes / softens probe scaling.

After a leaning cycle, the process variable will not be updated for 20 seconds this allows any bubbles on the probe to disperse.

0 or 4 mA, set, or check. Allows mA output signal to be selected, referenced to specific TDS levels, and adjusted if required.
See OUTPUT - RETRANS notes.

Sets Modbus address baud rate and infrared master / slave configuration, and verifies the number of units on the IR bus.
See OUTPUT COMMS sub-menu.

SHOPVALVES
GLOBAL VALVE SOLUTIONS | 阀门易购

SHOPVALVES
GLOBAL VALVE SOLUTIONS | 阀门易购

6.4.8 OUTPUT sub-menu notes

OUTPUT **DRIVE** notes

If standard (default) is selected the valve will remain open until the conductivity drops below the Set Point (plus the corresponding hysteresis). If 'pulsed' is selected the valve will open for 10 seconds and close for 20 seconds. The pulsed feature is suitable for use with solenoid or pneumatic valves only. It must not be used with motorised valves.

OUTPUT **CLEAN** notes

To select this feature, enter a duration time from 1 – 99 seconds or if a purge time is selected 1 – 9 seconds. A typical setting would be 20 seconds, increasing if the scaling on the probe (and in the boiler) is causing frequent recalibration to be needed. Set the duration to zero if the feature is not required.

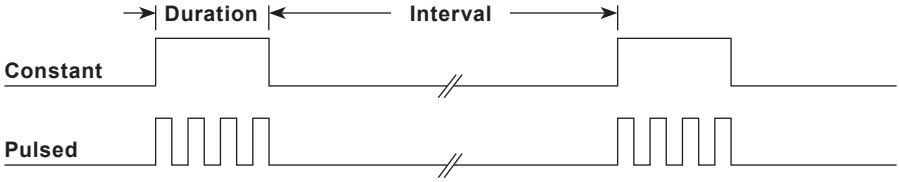

Fig. 29

Enter an interval time from 1 to 99 hours in 1 hour steps to set how often a cleaning cycle should occur. A cleaning cycle will also occur whenever the unit is switched off and on.

During the cleaning cycle (duration) the cleaning current can be PULSED (1 second on and 1 second off) or CONSTANT. For most installations PULSED should be selected. If a new style CP32 is being used, select CONSTANT as a pulsing circuit is already fitted. To determine which type is fitted, look for the pulsing relay or the style of tip (see Figures 25 and 26).

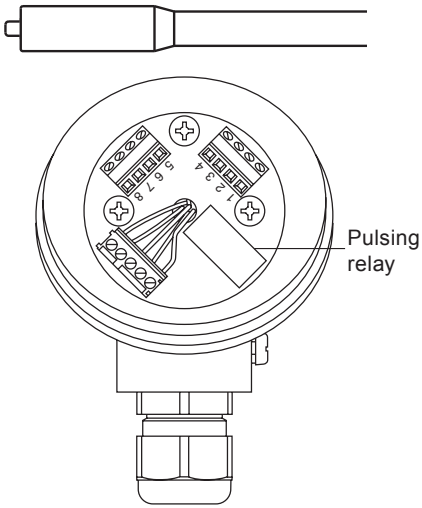

Fig. 30 New style CP32 (with a pulse circuit)

Select: 'CONSTANT'

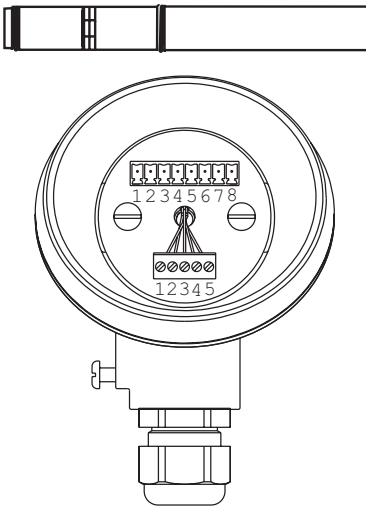

Fig. 31 Old style CP32 (pulse circuit not fitted)

Select: 'PULSED'

SHOPVALVES
GLOBAL VALVE SOLUTIONS | 阀门易购

SHOPVALVES
GLOBAL VALVE SOLUTIONS | 阀门易购

An automatic probe scale detect feature is available if a CP32 two-tip probe is fitted and selected. It selects the action taken by the controller to a probe with too high a resistance, caused, for example, by scaling. If 'CLEAN' or 'AL + CLEAN' is selected, the interval time is automatically set to 10 minutes until the scale is removed – see Figure 32.

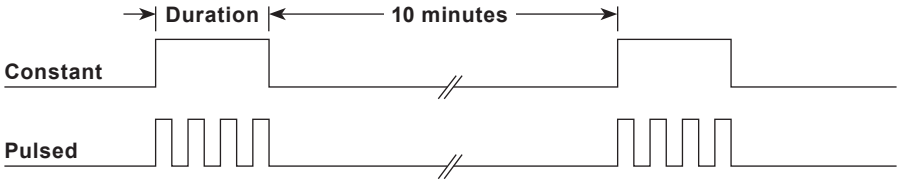

Fig. 32

OUTPUT **RETRANS** notes

This sets the controller outputs to suit the two current loop standards in common use. It retransmits the actual conductivity or TDS with the respect the full-scale range (default) or a user configurable range. For example: 0 µS = 4 mA and 100 µS = 20 mA.

Note: If a purge time has been selected, the 0-20 mA or 4-20 mA is held at the value recorded at the end of the last purge cycle.

0 or 4 mA
This selects either 0 or 4 mA (default). When entering this menu the currently selected option will be displayed in the key right part of the screen.

Set
4 mA and 20 mA retransmission output is set to equivalent PV value.
Normally 0 or 4 mA = 0 µS / cm (or ppm), and 20 mA = PV full scale µS / cm (or ppm), though this can be changed if required. The minimum value that can be set is 0000, the maximum is PV full scale.

Check
Enables the user to make adjustments to the 4 mA and 20 mA settings, to calibrate to a DVM reading.

OUTPUT – COMMS notes

Address is set to 1 unless there are other units on the same system.

Baud rate - Set to match the Baud rate of the line or system.

IR COMMS - Infrared, select as a master or slave device. See Section 7 - 'Communications'.

SHOPVALVES
GLOBAL VALVE SOLUTIONS | 阀门易购

SHOPVALVES
GLOBAL VALVE SOLUTIONS | 阀门易购

6.4.9 TIMER sub-menu

This timer controls the bottom blowdown intervals and their duration. It can be wired to a switch box on the blowdown valve actuator to monitor valve operation. An alarm can occur if the valve fails to close fully or lift off its seat within a certain period. The product cannot, however, be used to indicate that the valve has opened fully.

The parameters will vary according to the type of boiler. Seek advice from a boiler manufacturer, insurance company, or a competent water treatment company.

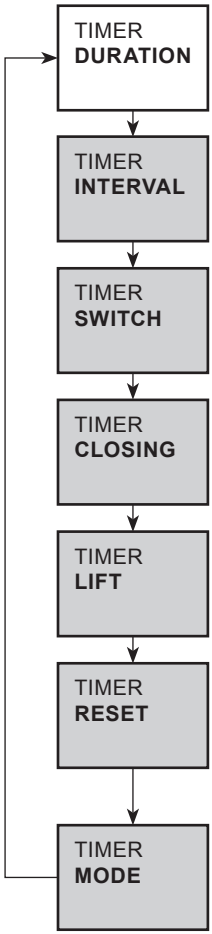

The time the blowdown valve is open for. If = 0, the bottom blowdown function is disabled.

Will not show if the duration is zero. The time between each blowdown. 12 hours (default), 00 – 99 hour can be selected in 1 hour steps.
Many boilers are set to blowdown once every 24 hours or once a shift.

Will not show if the duration is zero. Senses whether the valve has fully closed or not. Select FITTED if a switch box is to be fitted to the blowdown valve actuator. If a switch box is not fitted, select NONE (default).

Will not show if the duration is zero. The time the valve takes to close. Only shows if a switch is fitted. If time elapses an alarm is triggered. 5 (default), 1 – 10 seconds, 1 – second steps.

Will not show if the duration is zero. Only shows if a valve is fitted. Time to lift the valve off the seat. If time elapses, an alarm is triggered. 5 (default), 1 – 10 seconds, 1 – second steps.

Will not show if the duration is zero. Press the OK button to reset the elapsed duration or interval times and any alarms related to the bottom blowdown feature.

Will not show if the duration is zero.

OFF: Blowdown is prevented on this boiler.

OPEN: The blowdown valve on this boiler is held open, for example to drain a cold boiler. An alarm will be triggered while open is selected.

AUTO: Automatic timed blowdown. Pressing OK will select the mode. The selected mode will flash

WARNING: This product will remain in the mode selected in both run and commissioning mode. If left in OPEN mode, the boiler could empty sufficiently to cause dangerously low water level. An excessively long blowdown time can cause the boiler water level to become dangerously low.

SHOPVALVES
GLOBAL VALVE SOLUTIONS | 阀门易购

SHOPVALVES
GLOBAL VALVE SOLUTIONS | 阀门易购

6.4.10 ALARM sub-menu

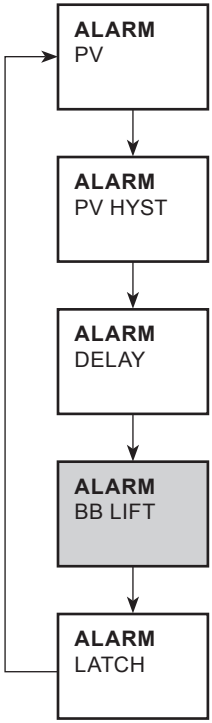

An alarm is triggered at a set PV figure (TDS / conductivity).

Hysteresis – 3% (default), 0 – 100% FS, 0.1% resolution. Prevents over-frequent switching of the alarm in a turbulent boiler. Do not set to more than 15% unless exceptional operating conditions are present.

A further damping effect for very turbulent boilers (0 - 99s).

Only available if timer switch is fitted and selected. Bottom blowdown alarm. In the ON position, an alarm will occur if the valve fails to lift off the seat after the predetermined time set in the timer menu.

Select on to latch the alarm relay when the PV reaches the alarm level. The relay will only reset when the commissioning mode is entered (pass code protected).
Select off to alarm only when PV reaches the alarm level and switches off when PV drops below the hysterisis.

Alarms are either all latching or all non-latching.

SHOPVALVES
GLOBAL VALVE SOLUTIONS | 阀门易购

SHOPVALVES
GLOBAL VALVE SOLUTIONS | 阀门易购

6.4.11 TEST sub-menu

Allows access to the diagnostic tools.

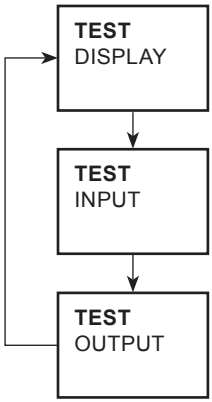

Turns on all the segments on the display. The screen should be completely black if all pixels are working. Press the button to enter test input mode, or the button to exit the test mode and return to the main menu.

Displays the signal on each input.

Tests the outputs to the required configuration.

SHOPVALVES
GLOBAL VALVE SOLUTIONS | 阀门易购

SHOPVALVES
GLOBAL VALVE SOLUTIONS | 阀门易购

6.4.12 TEST INPUT sub-menu

Allows access to the diagnostic features.

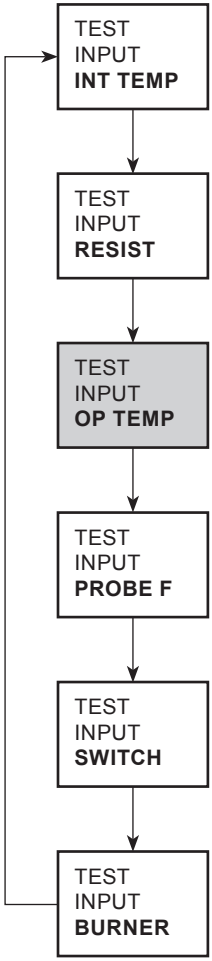

Displays the internal temperature of the microcontroller.

Displays the calculated water resistance in ohms, Kohms or Mohms.

Not visible if no Pt100 is fitted. Displays the equivalent operating temperature, measured by the Pt100 (if connected).

Displays the equivalent calculated Cell or Probe Factor, indicating the condition of the probe.

Shows if the bottom blowdown switch is OPEN or CLOSED (if connected).

Displays whether the burner is ON or OFF (if connected).

SHOPVALVES
GLOBAL VALVE SOLUTIONS | 阀门易购

SHOPVALVES
GLOBAL VALVE SOLUTIONS | 阀门易购

6.4.13 TEST OUTPUT sub-menu

TEST OUTPUT **RETRANS**	Enables the output to be adjusted between 4 mA and 20 mA to test the system.
TEST OUTPUT **VALVE**	Energises / de-energises the TDS valve relay for test purposes.
TEST OUTPUT **BBVALVE**	Energises / de-energises the bottom blowdown valve relay for test purposes.
TEST OUTPUT **ALARM 1**	Energises / de-energises the alarm relay for test purposes.
TEST OUTPUT **CANCEL?**	Resets the system to automatic control. (The system automatically resets after five minutes). Press OK to select Reset

SOFTWARE VERSION sub-menu

SW VER	Allows the software version to be viewed.

PASS CODE sub-menu

SET PASS	This allows the default pass code to be changed to a user-defined value. It is important that if the default pass code is changed that the new value is noted and kept safe.

TREND sub-menu

TREND	Shows the historical conductivity level graphically. Timebase can be selected – minutes, hours, or days. Scroll using the ∧ and ∨ buttons, then press the button to select the timebase and return to the main menu.

SHOPVALVES
GLOBAL VALVE SOLUTIONS | 阀门易购

SHOPVALVES
GLOBAL VALVE SOLUTIONS | 阀门易购

7. Communications

7.1 Infrared (IR)

All products in the range can communicate via an infrared bus between adjacent controllers. It enables the parameters of up to seven products to be passed to a product fitted with an RS485 (products with a graphics display).

The product connected to the RS485 network must be fitted on the left of all the slaves fitted to the IR bus (Figure 32) and have 'master' selected in the 'output-comms' menu.

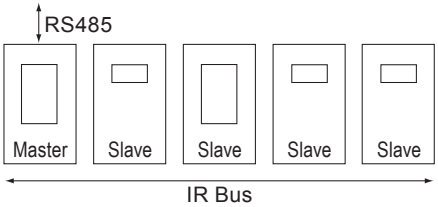

Fig. 32

Two or more IR buses can share the same panel or DIN rail by selecting another IR master. Master 2 will ignore bus 1. See Figure 33.

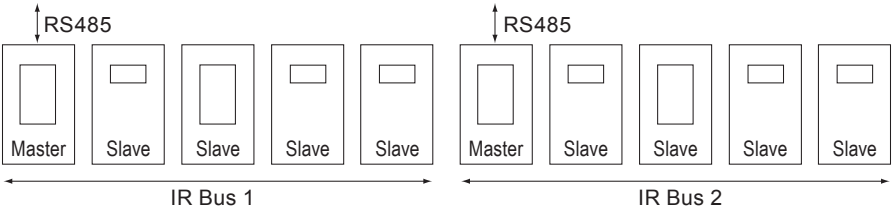

Fig. 33

To add another slave into an existing IR bus, either re-select 'master' or turn its power OFF and then ON. Only an IR master can pass the IR bus parameters to the RS485 network. If a slave is also connected to the RS485 network, only its parameters are passed.

7.2 RS485 addressing

An offset is added to the register addresses (see above) for each device, depending on their position on the IR bus, ie. the master's offset is 0, the device to its right has an offset of 100, the one to its right hand side 200 and so on.

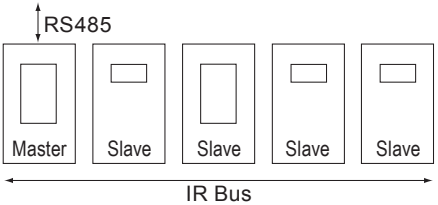

IR address	1	2	3	4	5
RS485 offset	0	100	200	300	400

Fig. 34

SHOPVALVES
GLOBAL VALVE SOLUTIONS | 阀门易购

SHOPVALVES
GLOBAL VALVE SOLUTIONS | 阀门易购

8. Maintenance

Note: Read the 'Safety information' in Section 1 before starting any maintenance.

No special servicing, preventative maintenance or inspection of the product is required.

During installation or maintenance, the rear of the product **must** be protected from environmental pollutants entering the product. Alternatively, the tasks can be performed in a dry clean environment.

8.1 Cleaning instructions

Use a cloth dampened with tap / de-ionised water or isopropyl alcohol. Use of other cleaning materials could damage the product and invalidate the warranty.

8.2 TDS controls

Boiler blowdown controls and alarms do, however, require testing and inspection.
General guidance is given in Health and Safety Executive Guidancenotes BG01 and INDG436 in the UK.

8.3 General weekly maintenance:

- Take a sample of the boiler water through a sample cooler, measure its conductivity (calculate the TDS).
- Check the conductivity controller calibration with the boiler at normal operating pressure.
- Check that the blowdown valve shuts when the power is removed.
- Operate any stop valves to ensure that they shut off, and move freely.

8.4 General six months maintenance:

- Isolate the system (or with the boiler empty), remove the conductivity probe.
- Clean the tip with fine abrasive paper / pad and wipe the insulation with a cloth.
- Examine the control / solenoid / stop valves and other fittings.
- Clean and refit or replace any parts necessary.

SHOPVALVES
GLOBAL VALVE SOLUTIONS | 阀门易购

SHOPVALVES
GLOBAL VALVE SOLUTIONS | 阀门易购

9. Fault finding

WARNING:

Before fault finding read the Safety information in Section 1 and the General wiring notes in Section 5.1.

Please note that there are hazardous voltages present and only suitably qualified personnel should carry out fault finding.

The product must be isolated from the mains supply before touching any of the wiring terminals.

Safety may be compromised if the fault finding procedures are not carried out in line with this manual.

Relay fuses to be replaced by manufacturer or accredited service department.

During installation or maintenance, the rear of the product MUST be protected from environmental pollutants entering the product. Alternatively, the tasks can be performed in a dry clean environment.

9.1 Introduction

The most likely time for faults to occur is during installation and commissioning. The most common type of fault is incorrect wiring. If after applying power to the product an error message is displayed, it may be necessary to fault find. To simplify and aid in this process, the product has a Test menu.

There are six viewable input channels. This will prove whether or not the product is functioning correctly.

SHOPVALVES
GLOBAL VALVE SOLUTIONS | 阀门易购

SHOPVALVES
GLOBAL VALVE SOLUTIONS | 阀门易购

9.2 System faults

Symptom	Action
1 **Display not illuminating**	**1.** Switch off the mains supply to the product. **2.** Check all wiring is correct. **3.** Check external fuse(s) are intact. Replace if necessary. **4.** Check the mains voltage is within specification. **5.** Switch on mains supply. If symptoms are still present return and replace the product. Consider the likelihood that the product has been damaged from mains borne surges / spikes. Consider installing additional ac power line protector between the product and the mains supply. The protector needs to be positioned close to the product to gain full protection.
2 **Display flashes on and off (1 second approx.)**	**1.** Switch off the mains supply to the product. **2.** Disconnect all signal wires. **3.** Switch the mains supply on: If symptoms are still present, return the product for examination. **4.** Replace each signal wire in turn until the fault occurs. **5.** Investigate and rectify any faults in the wiring, external sensors / transducers and modules associated with that connection. **Explanation** The internal power supply is unable to power up. If the voltages cannot be generated, the power supply switches off for approx. 1 second. The power supply then attempts to power up again. If the fault is still present, the cycle is repeated until the fault is removed. This is a safety feature and does not damage the product.
3 **Product powers up for a period of time (greater than 1 minute), then switches off**	**1.** Monitor the mains supply and ensure it is continuous and within the specification limits. **2.** Measure the ambient temperature and ensure it is less than specified. **3.** Investigate symptom 2. **Explanation** A re-settable thermal cut-out device will operate if one or more of the following occurs: **-** The power drawn exceeds the specification. **-** The input mains voltage is lower than specified. **-** The ambient temperature is higher than specified. **-** The internal power supply will switch off until the product temperature drops below 65 °C. This is a safety feature and does not damage the product.

SHOPVALVES
GLOBAL VALVE SOLUTIONS | 阀门易购

SHOPVALVES
GLOBAL VALVE SOLUTIONS | 阀门易购

9.3 Operational error messages

Any operational errors that occur will be displayed in the run mode, on the alarms and errors screen.

Error message	Cause	Action
1 Powerout	There has been a loss of power to the product during operation.	**1.** Remove power from product. **2.** Check that all wiring is correct. Power fail. **3.** Check that the power supply is secure, i.e. does not suffer from 'brown outs' **4.** Reapply power. **5.** Press OK to Clear.
2 SETUP MENU TIME OUT	The operator has entered the commissioning mode and has not pressed a button for 5 minutes or more.	**1.** Re-enter the commissioning mode if required. **2.** Press OK to Clear.
3 PV ALARM	The TDS has increased above the alarm level.	**1.** Check product is working correctly. Recalibrate if necessary. **2.** Check blowdown valve operation. **3.** Check boiler feed water conditioning regime. **4.** Press OK to Clear.
4 VALVE FAILED TO OPEN	Blowdown valve fails to start to open	**1.** Check the correct open time has been entered in the INPUT-LIFT menu. **2.** Check BB valve switch in the test menu. **3.** Check the wiring between switch and the product. **4.** Check the operation of the switch. **5.** Check the operation of the valve. **6.** Check and replace the switch and / or valve if necessary. **7.** Press OK to Clear.

SHOPVALVES
GLOBAL VALVE SOLUTIONS | 阀门易购

SHOPVALVES
GLOBAL VALVE SOLUTIONS | 阀门易购

Error message	Cause	Action
5 **VALVE FAILED TO CLOSE**	Blowdown valve fails to close fully	**1.** Check the correct closing time has been entered in the INPUT - CLOSING menu. **2.** See VALVE FAILED TO OPEN. **3.** Enter the commissioning mode and enter the correct passcode.* **4.** Press OK to Clear.
6 **PROBE SCALED (CP32 Only)**	The probe drive has increased to the maximum voltage.	**1.** The probe tip may be scaled. Ensure the correct water treatment is be used. **2.** Ensure the boiler water is not been contaminated. **3.** Check the probe wiring. **4.** Inspect the probe tip for damage. **5.** Press OK to Clear.
7 **ALARM IS LATCHED!**	Some errors latch the alarm relay for safety. Clearing the error from the error screen just removes the message.	**1.** Enter the commissioning (setup) mode. If the correct password is entered all the latched alarms will be cleared. **2.** Press OK to Clear.

9.4 Determining the probe condition

The probe condition can be checked without removing it from the boiler.
From the run menu select probe factor (PF) and compare it with the following table:

Probe factors	Typical
BCS1, BCS2, and BCS4	0.2 – 0.6
BCS3	0.3 – 0.7

A low cell constant (PROBE F) indicates that the probe is able to conduct well, whereas a high cell constant indicates that the probe tip has become less conductive, perhaps due to a build-up of scale.

A very low cell constant, however, could indicate an internal short circuit. The further the probe tips from any part of the boiler, the higher the cell constant.

SHOPVALVES
GLOBAL VALVE SOLUTIONS | 阀门易购

SHOPVALVES
GLOBAL VALVE SOLUTIONS | 阀门易购

10. Technical information

10.1 For technical assistance

Contact your local Spirax Sarco representative. Details can be found on order / delivery documentation or on our web site: **www.spiraxsarco.com**

10.2 Returning faulty equipment

Please return all items to your local Spirax Sarco representative. Please ensure all items are suitably packed for transit (preferably in the original cartons).

Please provide the following information with any equipment being returned:

1. Your name, company name, address and telephone number, order number and invoice and return delivery address.
2. Description and serial number of equipment being returned.
3. Full description of the fault or repair required.
4. If the equipment is being returned under warranty, please indicate:
   - Date of purchase.
   - Original order number.

Please return all items to your local Spirax Sarco representative. Ensure all items are suitably packed for transit (preferably in the original cartons).

10.3 Power supply

Mains voltage range	110 Vac - 240 Vac at 50 / 60 Hz
Power consumption	7.5 W maximum

SHOPVALVES
GLOBAL VALVE SOLUTIONS | 阀门易购

SHOPVALVES
GLOBAL VALVE SOLUTIONS | 阀门易购

10.4 Environmental

General		Indoor use only
Maximum altitude		2 000 m (6 562 ft) above sea level
Ambient temperature limits		0 - 55 °C (32 - 131 °F)
Maximum relative humidity		80% up to 31 °C (88 °F) decreasing linearly to 50% at 40 °C (104 °F)
Overvoltage category		III
Pollution degree		2 (as supplied)
		3 (when installed in an enclosure) - Minimum of IP54 or UL50 / NEMA Type 3, 3S, 4, 4X, 6, 6P or 13. See Section 4, Mechanical Installation.
Enclosure rating (front panel only)		NEMA type 4 hose down only (UL approval), and IP65 (verified by TRAC Global)
Torque rating for panel screws		1 - 1.2 Nm
LVD (safety)		Electrical Safety EN 61010-1 UL61010-1, 3rd Edition, 2012-05 CAN / CSA-C22.2 No. 61010-1, 3rd Edition, 2012-05
EMC:	Immunity / emissions	Suitable for heavy industrial locations
Enclosure	Material	Polycarbonate
Front panel	Material	Silicone rubber, 60 shore.
Solder		Tin / lead (60 / 40%)

SHOPVALVES
GLOBAL VALVE SOLUTIONS | 阀门易购

SHOPVALVES
GLOBAL VALVE SOLUTIONS | 阀门易购

10.5 Cable / wire and connector data

Mains and signal connector	
Termination	Rising clamp plug-in terminal blocks with screw connectors
Cable size	0.02 mm² (24 AWG) to 2.5 mm² (12 AWG).
Stripping length	5 – 6 mm

Note: Use only the connectors supplied by Spirax Sarco Ltd – Safety and Approvals may be compromised otherwise.

TDS probe	
Type	High temperature
Shield type	Screened
Number of cores	4 (CP32), 4 (CP10 and CP20 - For most applications the 1.25 m (4 ft) heat resistant cable will need to be extended using a junction box) or 2 (CP10 and CP30)
Gauge	1 – 1.5 mm² (18 - 16 AWG)
Maximum length	100 m (9990 and 999.0 ranges)
	30 m (99.90 range)
	10 m (9.990 range)
Recommended type	Prysmian (Pirelli) FP200,
	Delta Crompton Firetuf OHLS

Pt100 probe	
Type	High temperature, twisted
Shield type	Screened
Number of cores	3
Gauge	1 – 1.5 mm² (18 - 16 AWG)
Maximum length	100 m (328 ft)
Recommended type	various

0 / 4-20 mA output	
Type	Twisted pair
Shield type	Screened
Number of pairs	1
Gauge	0.23 - 1 mm² (24 - 18 AWG)
Maximum length	100 m (328 ft)
Recommended type	various

RS485 communication	
Type	EIA RS485 twisted pair
Shield type	Screened
Number of pairs	2 or 3
Gauge	0.23 mm² (24 AWG)
Maximum length	1 200 m (4000 ft)
Recommended type	Alpha Wire 6413 or 6414

LAN Cat 5 or Cat 5E ScTP (screened), FTP (foil) or STP (shielded) cable can be used, but limited to 600 m.

SHOPVALVES
GLOBAL VALVE SOLUTIONS | 阀门易购

SHOPVALVES
GLOBAL VALVE SOLUTIONS | 阀门易购

10.6 Input technical data

Water conductivity	
Probes type:	CP10, CP30 and CP32
Ranges	Minimum ≥ 1 µS @ 25 °C
	0 – 9.99 ppm or µS / cm
	0 – 99.9 ppm or µS / cm
	0 – 999 ppm or µS / cm
	0 – 9990 ppm or µS / cm
Accuracy	±2.5% FSD (Poss > if high EMC)
	±5% FSD for 0 - 9.999 range
pH factor	0.50 – 1.00 (0.7 default)
Neutralising factor	0.7
Resolution	0.1% FSD
Drive	ac – 4 wires
Temperature compensation (TC)	
Sensor type	Pt100 – Class B or better
Range	0 - 250 °C
(With Pt100 not fitted – user programmed temperature 100 - 250 °C, 1 °C steps)	
Accuracy	±2.5% FSD – system accuracy ±5%
Resolution	1% FSD
Drive	dc – 3 wires
Burner input	
Input voltage range	110 Vac - 240 Vac
Maximum current input	2 mA maximum

SHOPVALVES
GLOBAL VALVE SOLUTIONS | 阀门易购

SHOPVALVES
GLOBAL VALVE SOLUTIONS | 阀门易购

10.7 Output technical data

Probe cleaning	
Maximum voltage	32 Vdc
Drive	CONSTANT (dc) or PULSED, 1 second on, 1 second off.
4-20 mA(s)	
Minimum current	0 mA
Maximum current	20 mA
Open circuit voltage (maximum)	19 Vdc
Resolution	0.1% FSD
Maximum output load	500 ohm
Isolation	100 V
Output rate	10 / second
Relay(s)	
Contacts	2 x single pole changeover relays (SPCO)
Voltage ratings (maximum)	250 Vac
Resistive load	3 amp @ 250 Vac
Inductive load	1 amp @ 250 Vac
ac motor load	¼ HP (2.9 amp) @ 250 Vac
	1/10 HP (3 amp) @ 120 Vac
Pilot duty load	C300 (2.5 amp) - control circuit / coils
Electrical life (operations)	3 x 10^5 or greater depending on load
Mechanical life (operations)	30 x 10^6
RS485	
Physical layer	RS485 4-wire full or 2-wire half duplex
Protocol	Modbus RTU format
Isolation	60 Vac / dc
Receiver unit load	⅛ (256 devices - maximum)
Output rate	Up to 10 frames / second
Infrared	
Physical layer	IrDA
Baud	38400
Range	10 cm
Working angle	15°
Eye safety information	Exempt from EN 60825-12: 2007 Safety of laser products ~ does not exceed the accessible emission limits (AEL) of class 1

SHOPVALVES
GLOBAL VALVE SOLUTIONS | 阀门易购

SHOPVALVES
GLOBAL VALVE SOLUTIONS | 阀门易购

10.8 Default settings

10.8.1 MODE MENU

Allows the valve to be manually opened or closed	
Ranges	OPEN or CLOSE
Default	CLOSE

10.8.2 DATA MENU

TEMP (temperature units)	
Ranges	°C or °F
Default	°C
UNITS (TDS or conductivity units)	
Ranges	µS / cm or ppm
Default	µS / cm
PH TERM	
Ranges	0.50 - 1.00
Default	0.7
Resolution (steps)	0.01
Assuming µS / cm to ppm conversion = 0.7	

10.8.3 INPUT MENU

T COMP (Temperature compensation)	
Ranges	100 - 250 °C or 212 - 482 °F
Default	184 °C (10 bar g) or 363 °F
Resolution (steps)	1°
Units	°C or °F
TDS - SENSOR (Probe selection)	
Ranges	CP10, CP30, CP32
Default	CP10

SHOPVALVES
GLOBAL VALVE SOLUTIONS | 阀门易购

SHOPVALVES
GLOBAL VALVE SOLUTIONS | 阀门易购

TDS - SENSOR - FLT MODE (Fault mode) Only available if CP32 is selected	
Ranges	OFF, ALARM, CLEAN or AL+CLEAN
Default	OFF
CLEAN or AL+CLEAN is only available if a clean duration is selected	
TDS - PURGE – DURATION (Purge time)	
Ranges	0 - 180
Default	000
Resolution (steps)	1
Units	Seconds
TDS - PURGE – INTERVAL (Time between purges)	
Ranges	10 - 60
Default	30
Resolution (steps)	1
Units	Minutes
TDS - PURGE – BURNER (Purge time dependant on time or burner firing time) Only available if PURGE - DURATION is greater than 0 seconds.	
Ranges	Normal or Cumulative
Default	Cumulative
TDS - FILTER Only available if PURGE - DURATION is = 0 seconds	
Ranges	ON or OFF (TC = 64 or 8* seconds)
Default	ON
*8 second filter, also includes a 5% (FSD) Jump out function for CCD systems	
TDS - RANGE	
Ranges	9.99, 99.9, 999, 9990
Default	9990
Units	µS / cm or ppm

SHOPVALVES
GLOBAL VALVE SOLUTIONS | 阀门易购

SHOPVALVES
GLOBAL VALVE SOLUTIONS | 阀门易购

TDS - SP (Set Point)	
Ranges	0 – FSD
Default	50% FSD
Resolution (steps)	0.1% FSD
Units	µS / cm or ppm
TDS - HYST (Set Point hysteresis)	
Ranges	0 – SP
Default	5% FSD
Resolution (steps)	0.1% FSD
Units	µS / cm or ppm
TDS - CAL (Actual water TDS or conductivity to calibrate product)	
Ranges	0 – FSD
Default	4000
Resolution (steps)	0.1% FSD
Units	µS / cm or ppm
TDS - CAL INT (Calibration Interval – reminder to recalibrate product)	
Ranges	0 – 26
Default	0 (0 = off)
Resolution (steps)	1
Units	Weeks

SHOPVALVES
GLOBAL VALVE SOLUTIONS | 阀门易购

SHOPVALVES
GLOBAL VALVE SOLUTIONS | 阀门易购

10.8.4 OUTPUT MENU

CLEAN - DRIVE (Action on blowdown / solenoid valve)	
Ranges	STANDARD or PULSED - 10 sec open, 20 sec closed
Default	STANDARD
CLEAN - DURATION (Time to clean probe)	
Ranges	0 – 99 seconds or 0 – 9 seconds (If purge time > 0)
Default	20 (9 seconds (If purge time > 0))
Resolution (steps)	1
Units	Seconds
CLEAN - INTERVAL (Time between probe cleaning) Only available if CLEAN - DURATION is greater than 0 seconds.	
Ranges	1 – 99
Default	12
Resolution (steps)	1
Units	Hours
CLEAN Only available if CLEAN - DURATION is greater than 0 seconds.	
Ranges	PULSED - 1 second on, 1 second off, or CONSTANT (for CP32 already fitted with a pulse circuit)
Default	PULSED
RETRANS – 0 or 4 mA (Lowest output signal)	
Ranges	0 mA or 4 mA
Default	4 mA
Units	mA
RETRANS – SET – 0 / 4 mA (Set PV to correspond to 0 or 4 mA)	
Ranges	0 – FSD
Default	0
Resolution (steps)	0.1% FSD
Units	µS / cm or ppm

SHOPVALVES
GLOBAL VALVE SOLUTIONS | 阀门易购

SHOPVALVES
GLOBAL VALVE SOLUTIONS | 阀门易购

RETRANS – SET – 20 mA (Set PV to correspond to 20 mA)	
Ranges	0 – FSD
Default	FSD
Resolution (steps)	0.1% FSD
Units	µS / cm or ppm
COMMS – ADDRESS (MODBUS communication)	
Ranges	1 – 247
Default	1
COMMS – BAUD (MODBUS communication)	
Ranges	1200, 9600, 19200
Default	9600
COMMS – IR (Infrared communication)	
Ranges	SLAVE or MASTER
Default	SLAVE

SHOPVALVES
GLOBAL VALVE SOLUTIONS | 阀门易购

SHOPVALVES
GLOBAL VALVE SOLUTIONS | 阀门易购

10.8.5 TIMER MENU - Bottom blowdown (BB)

DURATION (bottom blowdown valve open time)	
Ranges	0 – 999
Default	0
Resolution (steps)	1
Units	Seconds
INTERVAL (Time between bottom blowdown) Only available if TIMER DURATION is greater than 0 seconds	
Ranges	1 - 99
Default	12
Resolution (steps)	1
Units	Hours
SWITCH (If a switch is fitted to valve, select fitted) Only available if TIMER DURATION is greater than 0 seconds	
Ranges	FITTED or NONE
Default	FITTED
CLOSING (Time allowed for valve to close) Only available if TIMER DURATION is greater than 0 seconds	
Ranges	1 – 10
Default	5
Resolution (steps)	1
Units	Seconds
LIFT (Time allowed for valve to lift off the seat)	
Only available if TIMER DURATION is greater than 0 seconds	
Ranges	1 – 10
Default	5
Resolution (steps)	1
Units	Seconds
MODE (Allow the valve to be manually opened, closed or automatically opened and closed under the control of the timer) Only available if TIMER DURATION is greater than 0 seconds	
Ranges	AUTO, OPEN, OFF
Default	AUTO

SHOPVALVES
GLOBAL VALVE SOLUTIONS | 阀门易购

SHOPVALVES
GLOBAL VALVE SOLUTIONS | 阀门易购

10.8.6 ALARM 1 MENU

PV (Process Variable alarm limit)	
Ranges	0 – FSD
Default	FSD
Resolution (steps)	0.1% FSD
Units	µS / cm or ppm
HYST (Process Variable alarm hysteresis)	
Ranges	0 – PV ALARM
Default	3% FSD
Resolution (steps)	0.1% FSD
Units	µS / cm or ppm
DELAY (Process Variable alarm delay)	
Ranges	0 – 99
Default	0
Resolution (steps)	1
Units	Seconds
BB LIFT (Alarms occurs if valve does not lift off the seat within lift time) Only available if TIMER – SWITCH – FITTED is selected	
Ranges	ON or OFF
Default	ON
LATCH (Alarm relay can be latched until commissioning mode is entered)	
Ranges	ON or OFF
Default	OFF

SHOPVALVES
GLOBAL VALVE SOLUTIONS | 阀门易购

SHOPVALVES
GLOBAL VALVE SOLUTIONS | 阀门易购

10.8.7 TEST MENU

DISPLAY	
Ranges	Black-on-white or white-on-black
Default	Black-on-white
INPUT – INT TEMP (Maximum internal temperature of the electronics)	
Ranges	-40 to 85 °C or -40 to 185 °F
Resolution (steps)	1
Units	°C or °F
INPUT – RESIST (Calculated water resistance at temperature)	
Ranges	1.33 ohms – 1.4 Mohms
Only available if a Pt100 is fitted.	
INPUT – OP TEMP (Boiler water operating temperature)	
Ranges	0 – 250 °C or 32 – 482 °F
Resolution (steps)	1
Units	°C or °F
INPUT – PROBE F (Calculated cell or probe factor)	
Ranges	0.01 – 1.00
Resolution (steps)	0.1
INPUT – SWITCH (Detects if the BB Switch is open or closed)	
Ranges	OPEN or CLOSED
INPUT – BURNER (Detects if the Burner is on or off)	
Ranges	ON or OFF
OUTPUT – RETRANS (Sets the output between 4-20 mA manually)	
Ranges	4 or 0 – 20 mA
Default	20.00
Resolution (steps)	0.01
Units	mA

SHOPVALVES
GLOBAL VALVE SOLUTIONS | 阀门易购

SHOPVALVES
GLOBAL VALVE SOLUTIONS | 阀门易购

OUTPUT – VALVE (Opens or closes blowdown valve manually)	
Ranges	ON or OFF
Default	ON

Press the OK button to activate relay – Automatic control of relays is selected by selecting cancel or after 5 minutes has elapses.

OUTPUT – BB VALVE (Opens or closes bottom blowdown valve manually) Only available if TIMER – DURATION is > 0.	
Ranges	ON or OFF
Default	ON

Press the OK button to activate the relay – Automatic control of relays is selected by selecting cancel or after 5 minutes has elapses.

OUTPUT – ALARM 1 (Energises or de-energises the alarm relay manually)	
Ranges	ON or OFF
Default	ON

Press the OK button to activate the relay – Automatic control of relays is selected by selecting cancel or after 5 minutes has elapses.

SET PASS MENU (Set pass code)	
Ranges	0000 - 9999
Default	See Section 2

TREND MENU (Sets time base of trend graph)	
Ranges	MINS, HRS, DAYS
Default	MINS

SHOPVALVES
GLOBAL VALVE SOLUTIONS | 阀门易购

SHOPVALVES
GLOBAL VALVE SOLUTIONS | 阀门易购

11. Appendix
Summary of the Modbus Protocol

Format: Byte

Start	1 bit
Data	8 bit
Parity	0 bit
Stop	1 bit

Format: Request frame

Address	1 byte
Function code	1 byte
Start address	2 bytes
Quantity of registers	2 bytes
Cyclic redundancy check (CRC)	2 bytes
Total	8 bytes

Format: Response frame

Address	1 byte
Function code	1 byte (or error code = function code plus 128)
Byte count	1 byte (or exception code, see below)
Register data	2 times the quantity of 16-bit register
Error check (CRC)	2 bytes
Total	9 bytes if correct (or 5 bytes if in error)

Only Function Code 03, 'Read holding registers' is allowed.

SHOPVALVES
GLOBAL VALVE SOLUTIONS | 阀门易购

SHOPVALVES
GLOBAL VALVE SOLUTIONS | 阀门易购

Parameters and register data

Register	Parameters
0	1 (Identity) **Note:** When the device is an IR slave and there is a temporary error in the IR Master-Slave comms, an offset of +32768 is added to the identification value of that particular slave stored in the master's database.
1	Process variable (PV) - TDS @ 25 °C
2	Set Point (SP)
3	µS / cm or ppm (general data)
4	Alarm 1
5	Range index
6	Probe factor
7	Temperature compensation (°C or °F)
8	Purge time (seconds)
9	Clean duration (seconds)

The format of the register data is 16 bit integer, with the most significant byte transmitted first.

Parameter	**Byte 1** Device Address	**Byte 2** Function Code	**Byte 3** Exception Code	**Byte 4** CRC (LSB)	**Byte 5** CRC (MSB)
Illegal function	XX	83	01	XX	XX
Illegal data address	XX	83	02	XX	XX

SHOPVALVES
GLOBAL VALVE SOLUTIONS | 阀门易购

12. Menu map

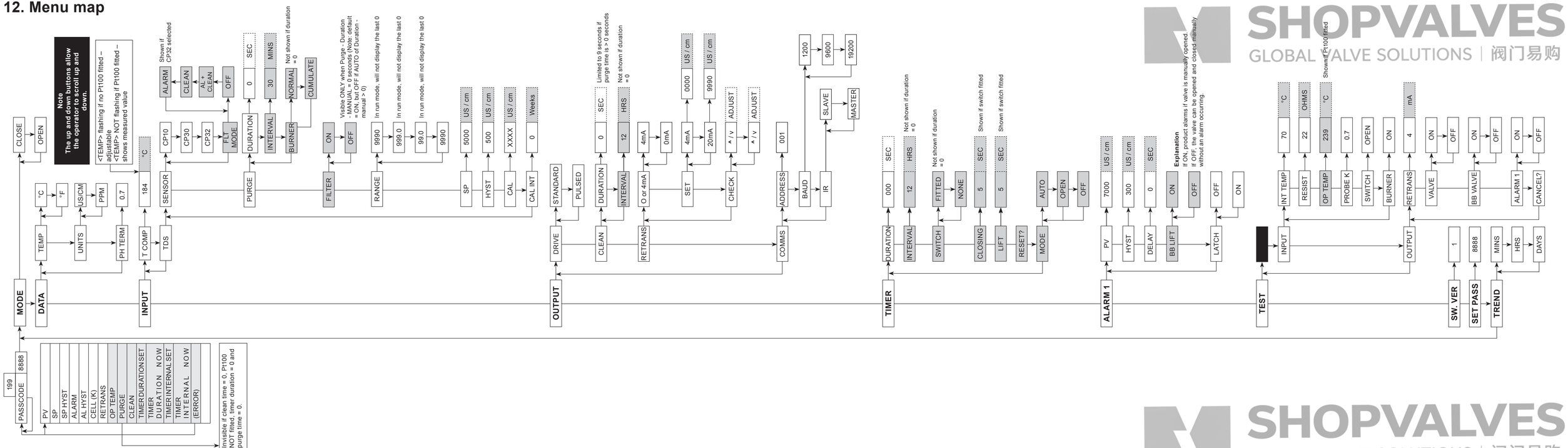

SHOPVALVES
GLOBAL VALVE SOLUTIONS | 阀门易购

SHOPVALVES
GLOBAL VALVE SOLUTIONS | 阀门易购

SHOPVALVES
GLOBAL VALVE SOLUTIONS | 阀门易购

SHOPVALVES
GLOBAL VALVE SOLUTIONS | 阀门易购