SHOPVALVES
GLOBAL VALVE SOLUTIONS | 阀门易购

1370050/18

IM-P137-02
CMGT Issue 18

spirax sarco

BSA and BSAT
Bellows Sealed Stop Valves
Installation and Maintenance Instructions

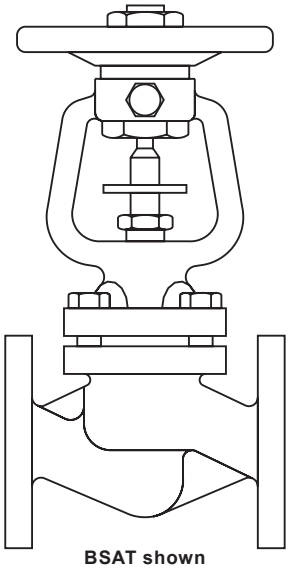

BSAT shown

1. Safety information
2. General product information
3. Installation
4. Commissioning
5. Operation
6. Maintenance
7. Spare parts

© Copyright 2025

Printed in GB

SHOPVALVES
GLOBAL VALVE SOLUTIONS | 阀门易购

SHOPVALVES
GLOBAL VALVE SOLUTIONS | 阀门易购

1. Safety information

Safe operation of these products can only be guaranteed if they are properly installed, commissioned, used and maintained by qualified personnel (see Section 1.11) in compliance with the operating instructions. General installation and safety instructions for pipeline and plant construction, as well as the proper use of tools and safety equipment must also be complied with.

1.1 Intended use

Referring to the Installation and Maintenance Instructions, name-plate and Technical Information Sheet, check that the product is suitable for the intended use/application.

The products listed below comply with the requirements of the European Pressure Equipment Directive 2014/68/EU (except when fitted with JIS /KIS flanges) and carry the CE mark when so required.

The products fall within the following Pressure Equipment Directive (PED) categories:

Product			Group 2 Gases	Group 2 Liquids
BSA1 BSA1T	(PN16)	DN15 - DN25	SEP	SEP
		DN32 - DN50	SEP	SEP
		DN65 - DN125	1	SEP
		DN150 - DN200	1	SEP
BSA2 BSA2T	(PN16)	DN15 - DN25	SEP	SEP
		DN32 - DN50	SEP	SEP
		DN65 - DN125	1	SEP
		DN150 - DN200	1	SEP
BSA2 BSA2T	(PN25)	DN15 - DN25	SEP	SEP
		DN32 - DN40	SEP	SEP
		DN50 - DN80	1	SEP
		DN100 - DN125	1	SEP
		DN150 - DN200	2	SEP
		DN250	2	1
BSA3 BSA3T	(PN40)	DN15 - DN25	SEP	SEP
		DN32	SEP	SEP
		DN40 - DN50	1	SEP
		DN65 - DN100	1	SEP
		DN125 - DN150	2	SEP
	(PN25)	DN200	2	SEP

SHOPVALVES
GLOBAL VALVE SOLUTIONS | 阀门易购

SHOPVALVES
GLOBAL VALVE SOLUTIONS | 阀门易购

Product			Group 2 Gases	Group 2 Liquids
BSA3 BSA3T	(ASME 150)	DN15 - DN25	SEP	SEP
		DN40 - DN50	SEP	SEP
		DN80 - DN100	1	SEP
	(ASME 300)	DN15 - DN25	SEP	SEP
		DN40 - DN100	1	SEP
		DN150 - DN200	2	SEP

i) The product has been specifically designed for use on steam, compressed air and water/condensate which are in Group 2 of the above mentioned Pressure Equipment Directive.

ii) Check material suitability, pressure and temperature and their maximum and minimum values. If the maximum operating limits of the product are lower than those of the system in which it is being fitted, or if malfunction of the product could result in a dangerous overpressure or overtemperature occurrence, ensure a safety device is included in the system to prevent such over-limit situations.

iii) A number of products are supplied for the intention of the end user (or agent thereof) modifying the flange configuration from that supplied. It is the responsibility of the organisation carrying out the modification to do so in accordance with the internationally recognised flange standards and to ensure that the design rating and operation of the product are not compromised. Spirax Sarco will not be held responsible for any unapproved modification or consequential liability resulting in failure to observe these requirements.

iv) Determine the correct installation situation and direction of fluid flow.

v) Spirax Sarco products are not intended to withstand external stresses that may be induced by any system to which they are fitted. It is the responsibility of the installer to consider these stresses and take adequate precautions to minimise them.

vi) Remove protection covers from all connections and protective film from all name-plates, where appropriate, before installation on steam or other high temperature applications.

1.2 Access

Ensure safe access and if necessary a safe working platform (suitably guarded) before attempting to work on the product. Arrange suitable lifting gear if required.

1.3 Lighting

Ensure adequate lighting, particularly where detailed or intricate work is required.

1.4 Hazardous liquids or gases in the pipeline

Consider what is in the pipeline or what may have been in the pipeline at some previous time. Consider: flammable materials, substances hazardous to health, extremes of temperature.

SHOPVALVES
GLOBAL VALVE SOLUTIONS | 阀门易购

SHOPVALVES
GLOBAL VALVE SOLUTIONS | 阀门易购

1.5 Hazardous environment around the product

Consider: explosion risk areas, lack of oxygen (e.g. tanks, pits), dangerous gases, extremes of temperature, hot surfaces, fire hazard (e.g. during welding), excessive noise, moving machinery.

1.6 The system

Consider the effect on the complete system of the work proposed. Will any proposed action (e.g. closing isolation valves, electrical isolation) put any other part of the system or any personnel at risk? Dangers might include isolation of vents or protective devices or the rendering ineffective of controls or alarms. Ensure isolation valves are turned on and off in a gradual way to avoid system shocks.

1.7 Pressure systems

Ensure that any pressure is isolated and safely vented to atmospheric pressure. Consider double isolation (double block and bleed) and the locking or labelling of closed valves. Do not assume that the system has depressurised even when the pressure gauge indicates zero.

1.8 Temperature

Allow time for temperature to normalise after isolation to avoid the danger of burns. If parts made from R-PTFE have been subjected to a temperature approaching 260 °C (500 °F) or higher, they will give off toxic fumes, which if inhaled are likely to cause temporary discomfort. It is essential for a no smoking rule to be enforced in all areas where R-PTFE is stored, handled or processed as persons inhaling the fumes from burning tobacco contaminated with R-PTFE particles can develop 'polymer fume fever'.

1.9 Tools and consumables

Before starting work ensure that you have suitable tools and/or consumables available. Use only genuine Spirax Sarco replacement parts.

1.10 Protective clothing

Consider whether you and/or others in the vicinity require any protective clothing to protect against the hazards of, for example, chemicals, high/low temperature, radiation, noise, falling objects, and dangers to eyes and face.

1.11 Permits to work

All work must be carried out or be supervised by a suitably competent person.
Installation and operating personnel should be trained in the correct use of the product according to the Installation and Maintenance Instructions.
Where a formal 'permit to work' system is in force it must be complied with. Where there is no such system, it is recommended that a responsible person should know what work is going on and, where necessary, arrange to have an assistant whose primary responsibility is safety.
Post 'warning notices' if necessary.

SHOPVALVES
GLOBAL VALVE SOLUTIONS | 阀门易购

SHOPVALVES
GLOBAL VALVE SOLUTIONS | 阀门易购

1.12 Handling

Manual handling of large and/or heavy products may present a risk of injury. Lifting, pushing, pulling, carrying or supporting a load by bodily force can cause injury particularly to the back. You are advised to assess the risks taking into account the task, the individual, the load and the working environment and use the appropriate handling method depending on the circumstances of the work being done.

1.13 Residual hazards

In normal use the external surface of the product may be very hot. If used at the maximum permitted operating conditions the surface temperature of some poducts may reach temperatures in excess of 425 °C (797 °F).
Many products are not self-draining. Take due care when dismantling or removing the product from an installation (refer to 'Maintenance instructions').

1.14 Freezing

Provision must be made to protect products which are not self-draining against frost damage in environments where they may be exposed to temperatures below freezing point.

1.15 Safety information - Product specific

See the relevant Sections in the attached Installation and Maintenance Instructions for specific details relating to these products.

Warning

The body/bonnet collar gaskets contain a thin stainless steel support ring which may cause physical injury if they are not handled and disposed of carefully.

Care must be taken when opening and closing the handwheel to prevent any possible injury to the hands from the locking screw.

1.16 Disposal

Unless otherwise stated in the Installation and Maintenance Instructions, this product is recyclable and no ecological hazard is anticipated with its disposal providing due care is taken, EXCEPT:

R-PTFE:

The soft sealing disc insert (soft sealing disc option only) is made of R-PTFE, therefore, any scrap or waste material containing this part must be disposed of as follows:

- **Can only be disposed of by approved methods, not incineration.**
- **Keep R-PTFE waste in a separate container, do not mix it with other rubbish and consign it to a landfill site.**

Please visit the Spirax Sarco product compliance web pages
https://www.spiraxsarco.com/product-compliance
for up to date information on any substances of concern that may be contained within this product. Where no additional information is provided on the Spirax Sarco product compliance web page, this product may be safely recycled and/or disposed providing due care is taken. Always check your local recycling and disposal regulations.

SHOPVALVES
GLOBAL VALVE SOLUTIONS | 阀门易购

SHOPVALVES
GLOBAL VALVE SOLUTIONS | 阀门易购

1.17 Returning products

Customers and stockists are reminded that under EC Health, Safety and Environment Law, when returning products to Spirax Sarco they must provide information on any hazards and the precautions to be taken due to contamination residues or mechanical damage which may present a health, safety or environmental risk. This information must be provided in writing including Health and Safety data sheets relating to any substances identified as hazardous or potentially hazardous.

1.18 Working safely with cast iron products on steam

Cast iron products are commonly found on steam and condensate systems. If installed correctly using good steam engineering practices, it is perfectly safe. However, because of its mechanical properties, it is less forgiving compared to other materials such as SG iron or carbon steel. The following are the good engineering practices required to prevent waterhammer and ensure safe working conditions on a steam system.

Safe Handling

Cast Iron is a brittle material. If the product is dropped during installation and there is any risk of damage the product should not be used unless it is fully inspected and pressure tested by the manufacturer.

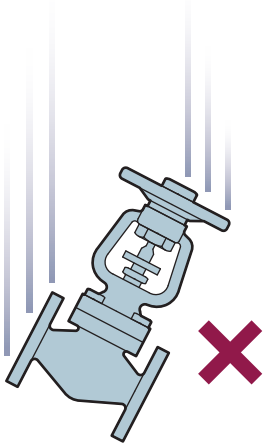

Prevention of water hammer

Steam trapping on steam mains:

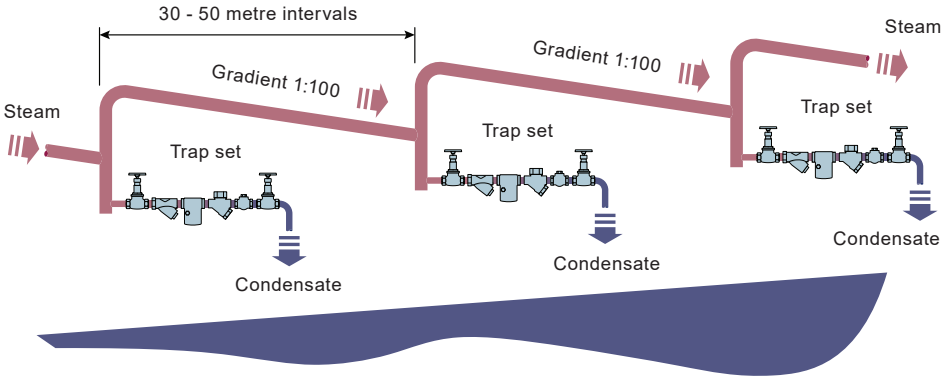

SHOPVALVES
GLOBAL VALVE SOLUTIONS | 阀门易购

SHOPVALVES
GLOBAL VALVE SOLUTIONS | 阀门易购

Steam Mains - Do's and Don'ts:

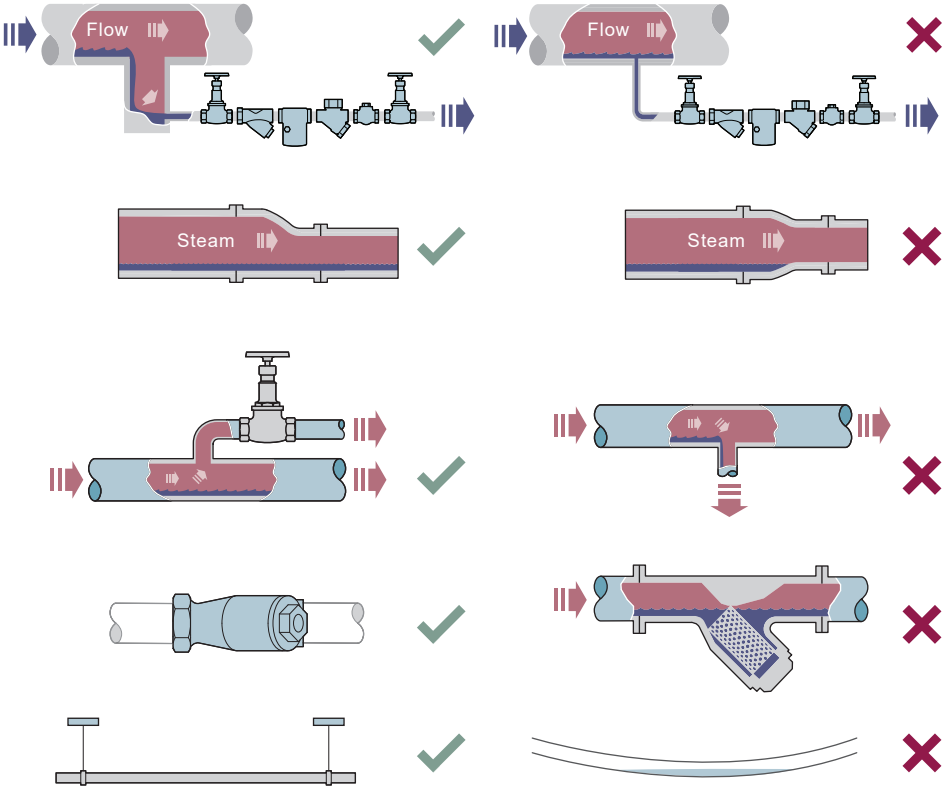

SHOPVALVES
GLOBAL VALVE SOLUTIONS | 阀门易购

SHOPVALVES
GLOBAL VALVE SOLUTIONS | 阀门易购

Prevention of tensile stressing

Pipe misalignment:

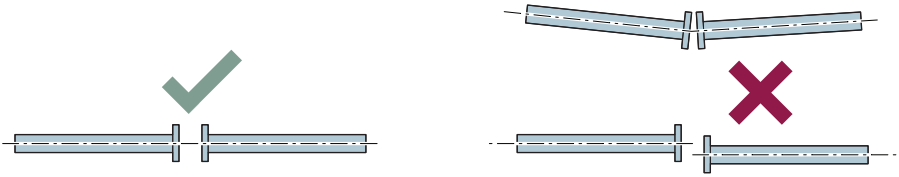

Installing products or re-assembling after maintenance:

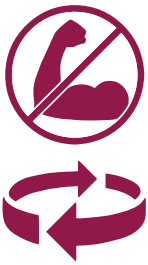

Do not over tighten.
Use correct torque figures.

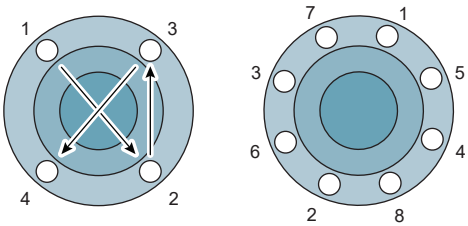

Flange bolts should be gradually tightened across diameters to ensure even load and alignment.

SHOPVALVES
GLOBAL VALVE SOLUTIONS | 阀门易购

SHOPVALVES
GLOBAL VALVE SOLUTIONS | 阀门易购

Thermal expansion:

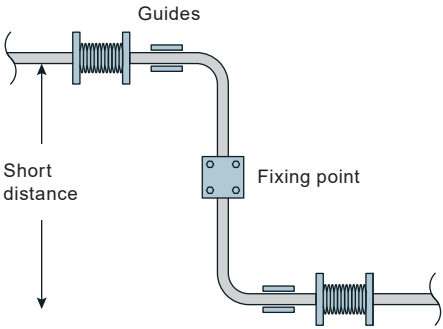

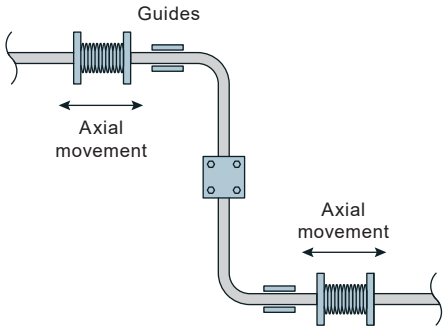

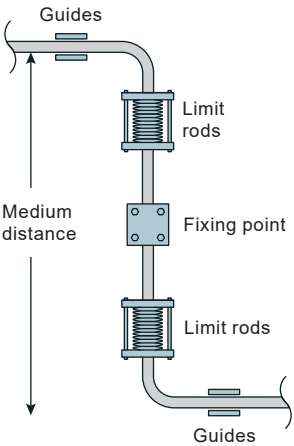

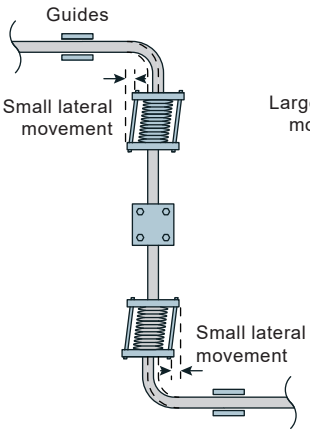

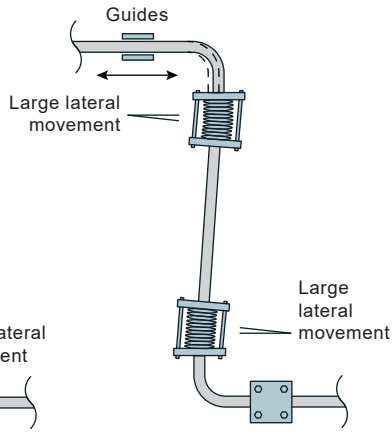

SHOPVALVES
GLOBAL VALVE SOLUTIONS | 阀门易购

SHOPVALVES
GLOBAL VALVE SOLUTIONS | 阀门易购

2. General product information

2.1 General description

A range of bellows sealed, in-line stop valves having flanged PN16, PN25 and PN40 connections for use on steam, gas, liquid, condensate and water systems.

Note: Throttling plugs, soft seats (up to DN100), balancing discs (DN125 and above) are available for certain applications.

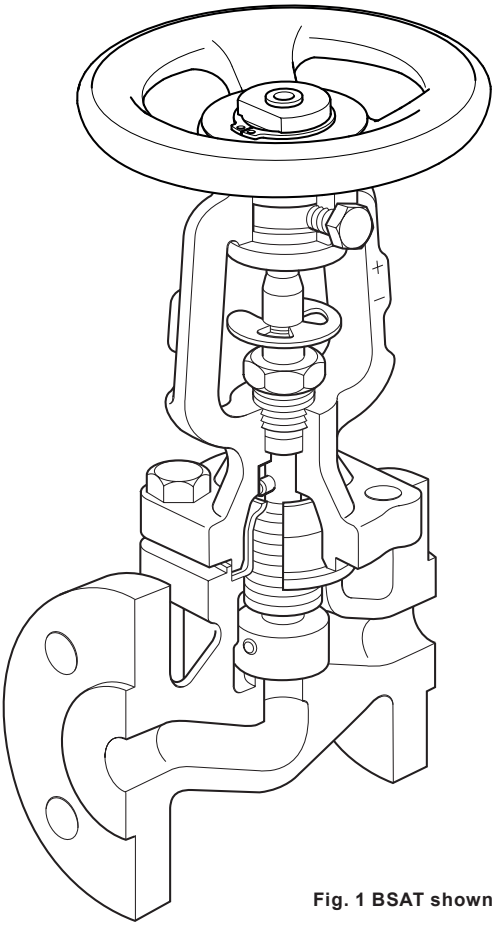

Fig. 1 BSAT shown

Available options:

Material and type		
Cast iron	BSA1	
	BSA1T	
	BSA1 R-PTFE	
	BSA1T R-PTFE	
	BSA1B/D	
SG iron	BSA2	PN16
		PN25
	BSA2T	PN16
		PN25
	BSA2 R-PTFE	PN16
	BSA2T R-PTFE	PN16
		PN25
	BSA2B/D	
Cast steel	BSA3	
	BSA3T	
	BSA3 R-PTFE	
	BSA3T R-PTFE	
	BSA3B/D	

SHOPVALVES
GLOBAL VALVE SOLUTIONS | 阀门易购

SHOPVALVES
GLOBAL VALVE SOLUTIONS | 阀门易购

Standards

The products listed comply with the requirements of the European Pressure Equipment Directive 2014/68/EU (except when fitted with JIS /KIS flanges) and carry the CE mark when so required.

Certification

The **BSA1** and **BSA1T** are available with a manufacturer's Typical Test Report.
The **BSA2**, **BSA2T**, **BSA3** and **BSA3T** are available with certification to EN 10204 3.1.
Note: All certification/inspection requirements must be stated at the time of order placement.

	Valve trim					Bellows	
	Standard flat disc	Throttling plug and locking device	Balancing disc	R-PTFE soft seat standard disc	R-PTFE soft seat throttling plug	Single ply	Twin ply
	●					●	
		●					●
				●		●	
					●		●
			●				●
	●					●	
	●†						●
		●					●
		●					●
				●		●	
					●		●
					●		●
			●				●
	●†						●
		●					●
				●			●
					●		●
			●				●

† DN125 and above only.

SHOPVALVES
GLOBAL VALVE SOLUTIONS | 阀门易购

SHOPVALVES
GLOBAL VALVE SOLUTIONS | 阀门易购

Stroke limiter for throttling versions

The handwheel nut on the **BSA1T, BSA2T** and **BSA3T** has a threaded hole for provision of a stroke limiter. Customer to supply standard nuts and bolts as indicated in the table opposite.

Size	Hexagon bolt
DN15 - DN80	M8 x 50 mm
DN100 - DN150	M12 x 75 mm
DN200 - DN250	M12 x 100 mm

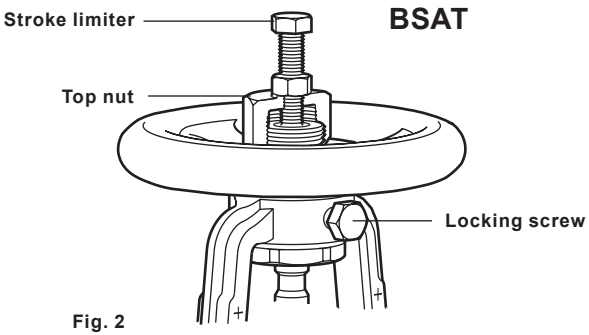

Fig. 2

Optional balancing disc assembly

Fig. 3

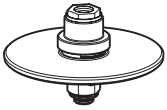

DN150 shown

Used above	25 bar ΔP	DN125	
	17 bar ΔP	DN150	6"
	10 bar ΔP	DN200	8"
	6 bar ΔP	DN250	(BSA2 only)

Optional soft sealing disc

Fig. 4

SHOPVALVES
GLOBAL VALVE SOLUTIONS | 阀门易购

SHOPVALVES
GLOBAL VALVE SOLUTIONS | 阀门易购

2.2 Sizes and pipe connections

2.2.1 BSA1 and BSA1T
DN15, DN20, DN25, DN32, DN40, DN50, DN65, DN80, DN100, DN125, DN150 and DN200
Flanged EN 1092/ISO 7005 PN16 and JIS B 2210/KS B 1511 10K
Face-to-face EN 558

2.2.2 BSA2 and BSA2T
DN15, DN20, DN25, DN32, DN40, DN50, DN65, DN80, DN100, DN125, DN150, DN200 and DN250* (*PN25 only)
Flanged EN 1092/ISO 7005 PN16 and PN25
Face-to-face EN 558

2.2.3 BSA3 and BSA3T (DIN)
DN15, DN20, DN25, DN32, DN40, DN50, DN65, DN80, DN100, DN125, DN150 and DN200
Flanged EN 1092/ISO 7005 PN40 (DN15 - DN150)
Flanged EN 1092/ISO 7005 PN25 (DN200)
Face-to-face EN 558

2.2.4 BSA3 and BSA3T ASME (ANSI)
Size ½", ¾", 1", 1½", 2", 3", 4", 6"* and 8"* (*ASME 300 only)
Flanged ASME B 16.5/BS 1560 Class 150 and 300 and JIS B 2210/KS B 1511 20K
Face-to-face ASME B 16.10

2.3 Product limitations

BSA1 and BSA1T	see Section 2.4
BSA2 and BSA2T	see Section 2.5
BSA3 and BSA3T (DIN)	see Section 2.6
BSA3 and BSA3T (ASME)	see Section 2.7

Note: The maximum permissible differential pressure in throttling function for BSA_T valves:

DN15 - DN80	2.0 bar	(29.00 psi)
DN100 - DN125	1.5 bar	(21.75 psi)
DN150	1.0 bar	(14.50 psi)
DN200 - DN250	0.8 bar	(11.60 psi)

SHOPVALVES
GLOBAL VALVE SOLUTIONS | 阀门易购

SHOPVALVES
GLOBAL VALVE SOLUTIONS | 阀门易购

2.4 Product limitations - BSA1 and BSA1T

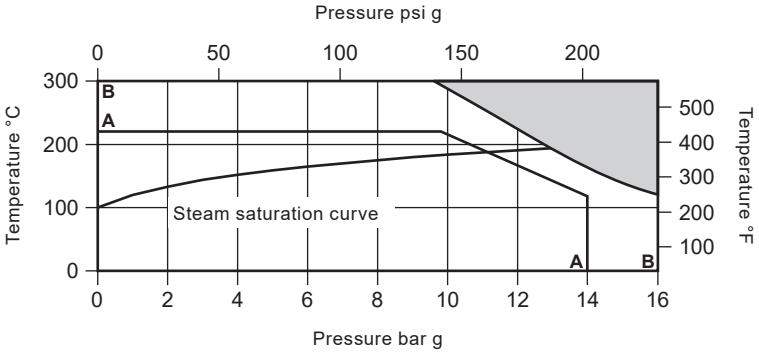

The product **must not** be used in this region.

A - B Flanged JIS/KS 10K

B - B Flanged PN16

Body design conditions			PN16	JIS / KS 10K
PMA	Maximum allowable pressure		16 bar g (232 psi g)	14 bar g (203 psi g)
TMA	Maximum allowable temperature		300 °C (572 °F)	220 °C (428 °F)
PMO	Maximum operating pressure for saturated steam service		12.9 bar g (187.05 psi g)	11 bar g (159.5 psi g)
TMO	Maximum operating temperature	Soft seat	230 °C (446 °F)	220 °C (428 °F)
		Metal seat	300 °C (572 °F)	220 °C (428 °F)
Minimum operating temperature			-10 °C (14 °F)	-10 °C (14 °F)
ΔPMX	Maximum differential pressure	BSA1 Limited to the PMO		
		BSA1T See note in Section 2.3		
Designed for a maximum cold hydraulic test pressure of:			24 bar g (348 psi g)	20 bar g (290 psi g)

SHOPVALVES
GLOBAL VALVE SOLUTIONS | 阀门易购

SHOPVALVES
GLOBAL VALVE SOLUTIONS | 阀门易购

2.5 Product limitations - BSA2 and BSA2T - PN16

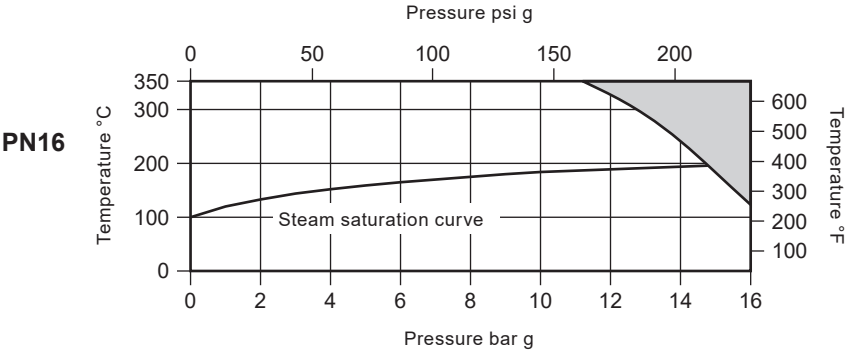

The product **must not** be used in this region.

Body design conditions			**PN16**
PMA	Maximum allowable pressure		16 bar g (232 psi g)
TMA	Maximum allowable temperature		350 °C (662 °F)
PMO	Maximum operating pressure for saturated steam service		14.7 bar g (213.15 psi g)
TMO	Maximum operating temperature	Soft seat	230 °C (446 °F)
		Metal seat	350 °C (662 °F)
Minimum operating temperature			-10 °C (14 °F)
ΔPMX	Maximum differential pressure	BSA2 Limited to the PMO	
		BSA2T See note in Section 2.3	
Designed for a maximum cold hydraulic test pressure of:			24 bar g (348 psi g)

SHOPVALVES
GLOBAL VALVE SOLUTIONS | 阀门易购

SHOPVALVES
GLOBAL VALVE SOLUTIONS | 阀门易购

2.6 Product limitations - BSA2 and BSA2T - PN25

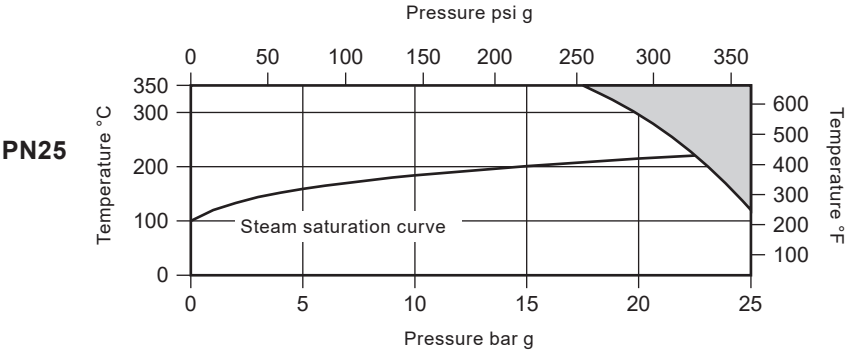

The product **must not** be used in this region.

Body design conditions			**PN25**
PMA	Maximum allowable pressure		25 bar g (362.5 psi g)
TMA	Maximum allowable temperature		350 °C (662 °F)
PMO	Maximum operating pressure for saturated steam service		22.3 bar g (323.35 psi g)
TMO	Maximum operating temperature	Soft seat	230 °C (446 °F)
		Metal seat	350 °C (662 °F)
Minimum operating temperature			-10 °C (14 °F)
ΔPMX	Maximum differential pressure	BSA2 Limited to the PMO	
		BSA2T See note in Section 2.3	
Designed for a maximum cold hydraulic test pressure of:			38 bar g (551 psi g)

SHOPVALVES
GLOBAL VALVE SOLUTIONS | 阀门易购

SHOPVALVES
GLOBAL VALVE SOLUTIONS | 阀门易购

2.7 Product limitations - BSA3 and BSA3T (DIN) - PN25, DN200

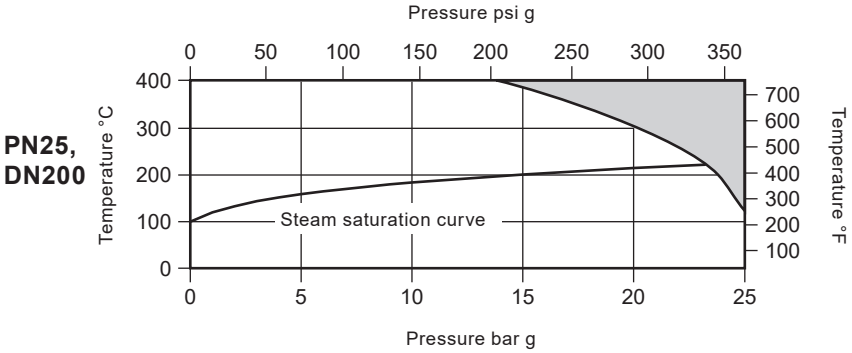

The product **must not** be used in this region.

Body design conditions			PN25 DN200
PMA	Maximum allowable pressure		25 bar g (362.5 psi g)
TMA	Maximum allowable temperature		400 °C (752 °F)
PMO	Maximum operating pressure for saturated steam service	Soft seat	23.2 bar g (336.4 psi g)
		Metal seat	23.2 bar g (336.4 psi g)
TMO	Maximum operating temperature	Soft seat	230 °C (446 °F)
		Metal seat	400 °C (752 °F)
Minimum operating temperature			-10 °C (14 °F)
ΔPMX	Maximum differential pressure	BSA3 Limited to the PMO	
		BSA3T See note in Section 2.3	
Product is safe for use under full vacuum conditions			
Designed for a maximum cold hydraulic test pressure of:			38 bar g (551 psi g)

SHOPVALVES
GLOBAL VALVE SOLUTIONS | 阀门易购

SHOPVALVES
GLOBAL VALVE SOLUTIONS | 阀门易购

2.8 Product limitations - BSA3 and BSA3T (DIN) - PN40

PN40,
DN15 - DN150

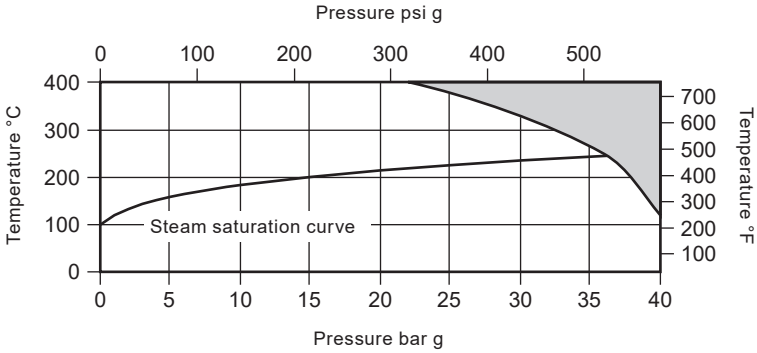

The product **must not** be used in this region.

Body design conditions			**PN40 DN15 - DN150**
PMA	Maximum allowable pressure		40 bar g (580 psi g)
TMA	Maximum allowable temperature		400 °C (752 °F)
PMO	Maximum operating pressure for saturated steam service	Soft seat	27 bar g (391.5 psi g)
		Metal seat	36.1 bar g (523.45 psi g)
TMO	Maximum operating temperature	Soft seat	230 °C (446 °F)
		Metal seat	400 °C (752 °F)
Minimum operating temperature			-10 °C (14 °F)
ΔPMX	Maximum differential pressure	BSA3 Limited to the PMO	
		BSA3T See note in Section 2.3	
Product is safe for use under full vacuum conditions			
Designed for a maximum cold hydraulic test pressure of:			60 bar g (870 psi g)

SHOPVALVES
GLOBAL VALVE SOLUTIONS | 阀门易购

SHOPVALVES
GLOBAL VALVE SOLUTIONS | 阀门易购

2.9 Product limitations - BSA3 and BSA3T (ASME/ANSI)

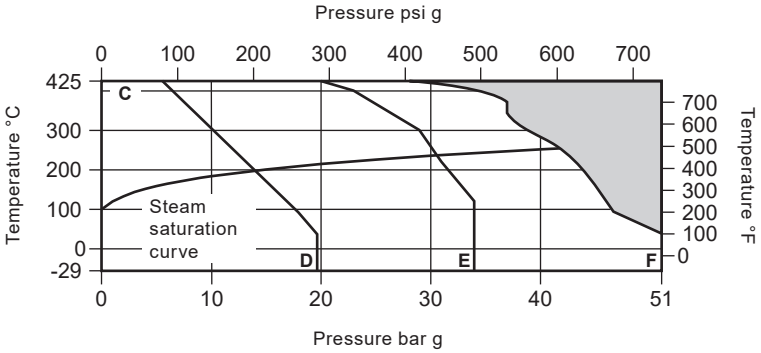

The product **must not** be used in this region.

C - D Flanged ASME (ANSI) 150

C - E Flanged JIS/KS 20K

C - F Flanged ASME (ANSI) 300

Body design conditions			ASME 150	ASME 300	JIS / KS 20K
PMA	Maximum allowable pressure		19.6 bar g (284.2 psi g)	51 bar g (739.5 psi g)	34 bar g (493.1 psi g)
TMA	Maximum allowable temperature		425 °C (797 °F)	425 °C (797 °F)	425 °C (797 °F)
PMO	Maximum operating pressure for saturated steam service	Soft seat	14 bar g (203 psi g)	27 bar g (391.5 psi g)	27 bar g (391.5 psi g)
		Metal seat	14 bar g (203 psi g)	41.6 bar g (603.2 psi g)	30.7 bar g (445.15 psi g)
TMO	Maximum operating temperature	Soft seat	230 °C (446 °F)	230 °C (446 °F)	230 °C (446 °F)
		Metal seat	425 °C (797 °F)	425 °C (797 °F)	425 °C (797 °F)
Minimum operating temperature			-29 °C (-22 °F)	-29 °C (-22 °F)	0 °C (32 °F)
ΔPMX	Maximum differential pressure			BSA3 Limited to the PMO	
				BSA3T See note in Section 2.3	
Product is safe for use under full vacuum conditions					
Designed for a maximum cold hydraulic test pressure of:			31 bar g (449.5 psi g)	77 bar g (1 116 psi g)	50 bar g (725 psi g)

SHOPVALVES
GLOBAL VALVE SOLUTIONS | 阀门易购

SHOPVALVES
GLOBAL VALVE SOLUTIONS | 阀门易购

3. Installation

Note: Before actioning any installation observe the 'Safety information' in Section 1.

Referring to the Installation and Maintenance Instructions, name-plate and Technical Information Sheet, check that the product is suitable for the intended installation:

3.1 Check materials, pressure and temperature and their maximum values. If the maximum operating limit of the product is lower than that of the system in which it is being fitted, ensure that a safety device is included in the system to prevent overpressurisation.

3.2 Remove the protective covers from all connections.

3.3 Install the valve in the direction of flow given by the arrow on the body. The preferred position is with the spindle vertical. The valve can be installed from the vertical to the horizontal plane (see Figure 6).

3.4 **Important note:** When a balancing disc is installed, the valve body should be mounted with the upstream fluid flowing into the upper valve chamber first, so the fluid pressure acts on top of the balancing disc. This is opposite to normal installation. If a balancing disc is upgrading or replacing a standard disc, the original valve body must be turned around in the pipeline and permanently marked with a new flow arrow indicating the changed direction of flow.

Do not mount the valve upside down.

What is a balancing plug, how does it work and why use it?

- A balancing plug is a two stage on/off mechanism.
- (See Figure 6) The pre-lifting plug (**A**) acts as a pilot valve and is opened first, allowing the medium to pass through at a controlled rate. The differential pressure then reduces across the valve - allowing the main valve plug (**B**) to be easily lifted off its seat. To assist closing the valve the flowing medium must enter on the 'Bellows' side, this is the opposite to normal installation.

Fig. 5 DN125 shown

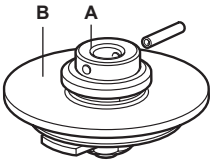

- This device is fitted in the first instance to allow easy closure of the larger valves. In normal flow conditions it is impossible on large valves and high differential pressure to close the valve. By reversing the flow and installing a pilot valve, this problem is overcome.

Should the differential pressure exceed those listed against the respective sizes in the table below then please remember 'Balancing plugs' must be used in all the valves.

Size	Differential pressure (bar)
DN125	25.0
DN150	17.0
DN200	10.0
DN250	6.0

SHOPVALVES
GLOBAL VALVE SOLUTIONS | 阀门易购

SHOPVALVES
GLOBAL VALVE SOLUTIONS | 阀门易购

3.5 When installed on steam systems a suitable steam trap should be fitted immediately upstream of the isolation valve to drain condensate. This will ensure drainage of the pipe when the valve is closed, and will prevent damage of the valve due to waterhammer. The drain trap should be either a ball float (FT) or thermodynamic (TD) type. Correct condensate drainage of all upstream pipework is also vital.

3.6 Always open isolation valves slowly to avoid system shocks.

3.7 **Note:** It is advisable that when work is being carried out downstream of a valve installation, double isolation (block and bleed) should be fitted. In addition when installed as the final valve in a pipeline, as a safety precaution, a blanking plate or blank flange must be fitted to the outlet flange of the valve.

SHOPVALVES
GLOBAL VALVE SOLUTIONS | 阀门易购

SHOPVALVES
GLOBAL VALVE SOLUTIONS | 阀门易购

4. Commissioning

After installation or maintenance ensure that the system is fully functioning. Carry out tests on any alarms or protective devices.

Remember to tighten the gland packing ring after the valve has been fully assembled.

5. Operation

5.1 The bellows sealed isolation valve plays an important role in the conservation of energy by eliminating fugitive stem seal emissions.

5.2 The valve is operated manually by a handwheel. Special care must be taken to ensure that the movement is made in the correct direction.
To open the valve fully, it is recommended to turn the handwheel until the shaft is raised to the maximum position, indicated by the (+) on the bonnet, then turn the handwheel clockwise an 1 to ¼ turn to remove any backlash. This is to prevent the possibility of attempting to force open a valve, which is already fully open, resulting in damage to the stem, bellows unit or other components.
Spirax Sarco BSA valves are fitted with a position indicator which can be found on the stem, and should align with the (+) or (-) on the bonnet support pillars. (+ = fully open/- = fully closed).

5.3 If valve 'keys' are used care must be taken not to use excessive force when opening or closing the valve.

5.4 BSAT valves are fitted with a throttling valve plug to allow close control when opening the valve. The number of turns open will affect the flowrate through the valve.
Once correct flowrate is obtained ensure the locking screw and stroke limiter (see Fig. 7) are tightened. This will minimise any vibration.
The effect of valve opening for each valve size can be seen in the chart, page 24.

SHOPVALVES
GLOBAL VALVE SOLUTIONS | 阀门易购

SHOPVALVES
GLOBAL VALVE SOLUTIONS | 阀门易购

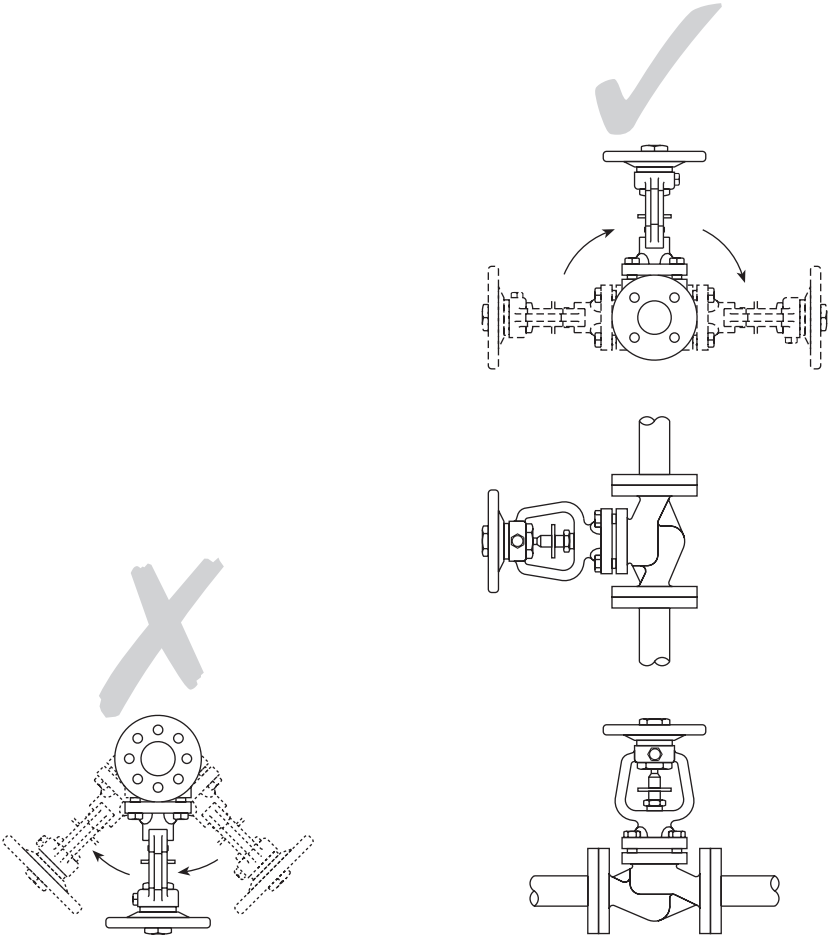

Incorrect installation **Correct installation**

Fig. 6

SHOPVALVES
GLOBAL VALVE SOLUTIONS | 阀门易购

SHOPVALVES
GLOBAL VALVE SOLUTIONS | 阀门易购

BSAT flow data - The effect of valve opening for each valve size

Size DN	15	20	25	32	40	50	65	80	100	125	150	200	250
Handwheel rotations	Kv values for given handwheel rotations tested to EN 60534-2-3 Water at 20 °C												
0	0	0	0	0	0	0	0	0	0	0	0	0	0
0.5	1.2	1.2	1.4	2.2	4.4	4.1	5.6	10.4	12.0	21	28	66	110
1	1.7	1.7	2.0	3.7	5.0	5.0	7.0	11.5	14.3	23	30	81	140
1.5	2.7	2.9	2.9	5.0	5.5	6.0	9.2	13.6	24.5	26	33	97	150
2	3.6	4.0	4.6	7.9	7.6	7.2	11.6	16.3	34.1	42	46	111	165
2.5	4.4	5.3	6.4	10.6	11.0	9.7	12.4	18.5	59.6	67	65	149	190
3	5.4	6.6	8.5	13.8	14.7	14.1	13.0	21.1	86.2	94	90	199	225
4			10.6	17.0	22.6	24.4	25.2	24.5	123.0	140	152	302	330
4.5			11.2	18.3	24.4	29.4	32.5	29.0	139.0	181	177	355	451
5			11.9	19.6	27.2	37.0	43.6	39.1	164.1	185	216	403	460
6					28.9	46.2	60.2	61.0	179.0	220	264	455	600
6.5					29.1	47.0	63.0	69.0	186.0	230	288	480	641
6.7					29.3	47.2	64.3	73.0		235	293	487	656
7							65.9	78.0		241	305	495	678
8							71.2	90.0		259	337	507	738
8.5							74.6	92.0			348	522	760
9.5								99.0			369		793
10								101.6					805
10.7													827

SHOPVALVES
GLOBAL VALVE SOLUTIONS | 阀门易购

SHOPVALVES
GLOBAL VALVE SOLUTIONS | 阀门易购

Stroke limiter for throttling versions

The handwheel nut on the **BSA1T, BSA2T** and **BSA3T** has a threaded hole for the provision of a stroke limiter. Customer to supply standard nuts and bolts as indicated in the table below:

Size	Hexagon bolt
DN15 - DN80	M8 x 50 mm
DN100 - DN150	M12 x 75 mm
DN200 - DN250	M12 x 100 mm
Note: The maximum permissible differential pressure in throttling function:	
DN15 - DN80	2.0 bar
DN100 - DN125	1.5 bar
DN150	1.0 bar
DN200 - DN250	0.8 bar

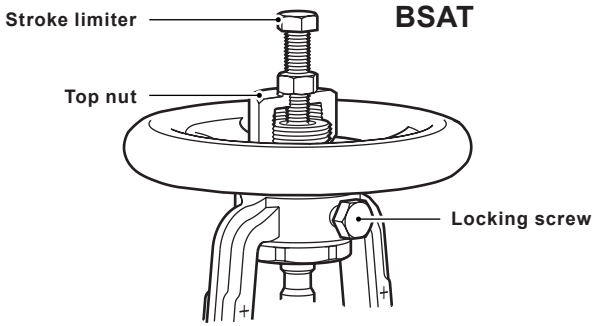

Fig. 7

SHOPVALVES
GLOBAL VALVE SOLUTIONS | 阀门易购

SHOPVALVES
GLOBAL VALVE SOLUTIONS | 阀门易购

6. Maintenance

All the internals of the bellows sealed valve can be replaced (See Section 7, Spare parts).

Note: Before actioning any maintenance programme observe the data in Section 1 - 'Safety information'.

Warning

The body/bonnet collar gaskets (10a and 10b) contain a thin stainless steel support ring which may cause physical injury if they are not handled and disposed of carefully.

6.1 Before undertaking any maintenance on the valve, ensure that any pressure is isolated and safely vented to atmospheric pressure. The valve should then be allowed to cool. When reassembling, ensure that all joint faces are clean.

6.2 How to fit the body/bonnet gaskets

This can be carried out whilst the valve is connected in the pipeline. Remove the valve bonnet (**2**) from the body (**1**) by unscrewing bonnet studs/nuts (**9**). The body gasket (**10b**) is now visible and can quickly be replaced. Ensure the gasket face in the body (**1**) is clean before fitting a replacement. To replace the second gasket (**10a**) which is situated between the bonnet (**2**) and the stainless steel bellows support collar, firstly remove the clip-on position indicator, remove the locking screw (BSAT versions only). Rotate the handwheel (**7**) in a clockwise direction. This pushes the main stem (**6**) downwards and creates a gap between the bellows support collar and the bonnet (**2**). If the support collar remains attached to the bonnet (**2**), gently prise the collar away from the bonnet being careful not to damage the collar.

Do not allow the bellows to stretch as this can reduce the bellows life.

By continually rotating the handwheel (**7**) in a clockwise direction, the stem (**6**) can be unscrewed from the bonnet bush. When the stem (**6**) is disconnected from the bonnet bush, unscrew the gland nut (unbolt the gland flange if fitted) and remove both this and the gland washer (or gland follower if fitted). Keep these parts safe as they are not supplied as spares. The stem/bellows assembly (**6, 5**) can now be withdrawn out of the bonnet (**2**). The second bellows collar gasket (**10a**) can now be replaced - ensuring both the bellows support collar surface and bonnet surface are clean and the gasket is accurately located. Before the stem/bellows assembly (**6, 5**) is reassembled into the bonnet (**2**), the stem packing ring (**8**) should be replaced (see Section 6.3).

6.3 How to fit the stem packing

By following through Section 6.2 it is now possible to replace the stem packing ring (**8**). Two of these rings are provided in the spares kit but only one is required. Ensure all of the old stem packing material is removed from the bonnet cavity and all locating surfaces are clean. Valve assembly is the opposite to removal - remembering to fit a bellows collar gasket between the collar and the valve bonnet. Ensure the solid stem pin (which is pressed into the stem) is aligned with the slot inside the bonnet. Before screwing the end of the stem into the bonnet bush remember to fit a new stem packing ring (**8**), the original gland washer (or gland follower) and gland nut (or gland flange) over the stem. **Do not allow the stem thread to damage the inner surface of the gland packing ring.** Carefully slide the new packing ring down the stem into the cavity and slide the original gland washer (or gland follower if fitted) on top of the packing ring. Remember to tighten the gland packing ring after the valve has been fully assembled.

SHOPVALVES
GLOBAL VALVE SOLUTIONS | 阀门易购

SHOPVALVES
GLOBAL VALVE SOLUTIONS | 阀门易购

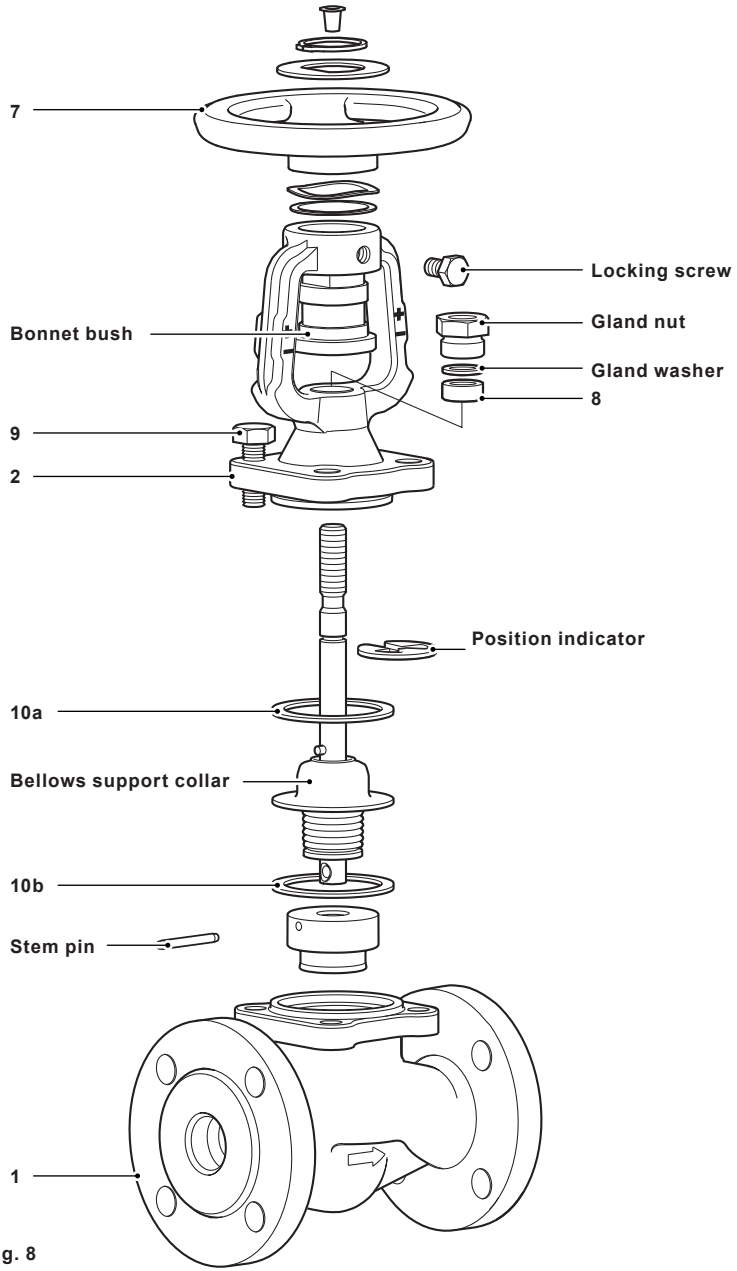

Fig. 8

SHOPVALVES
GLOBAL VALVE SOLUTIONS | 阀门易购

SHOPVALVES
GLOBAL VALVE SOLUTIONS | 阀门易购

6.4 How to fit the stem and bellows assembly

By following through Section 6.2 it is now possible to fit a new stem/bellows assembly (**6, 5**). Fitting this is opposite to removal - remembering to fit a bellows collar gasket (**10a**) between the bellows support collar and valve bonnet (**2**). Ensure the bellows collar gasket (**10a**) is accurately located. Before fitting the new stem/bellows assembly (**6, 5**) into the bonnet (**2**), apply a small amount of lubricating compound such as Gulf Sovereign LC grease to the end of the stem pin (which is pressed into the stem). Ensure the stem pin is aligned with the slot inside the bonnet. Carefully slide the stem up through the bonnet. Before screwing the end of the stem into the bonnet bush remember to fit a new stem packing ring (**8**) (see Section 6.3), the original gland washer (or gland follower) and gland nut (or gland flange) over the stem (**6**). **Do not allow the stem thread to damage the inner surface of the gland packing ring.** Carefully slide the new packing ring down the stem into the cavity and slide the original gland washer (or gland follower if fitted) on top of the packing ring (**8**). Remember to tighten the gland packing ring after the valve has been fully assembled.

6.5 How to fit the disc

By following through Section 6.2 it is now possible to replace the valve's disc. To replace the disc (**4**) (or balancing disc assembly*) simply remove the old stem pin and replace the disc (**4**). Attach the new disc with the new stem pin (supplied). Where the disc (**4**) is attached using a retaining nut and collet arrangement, simply prise the crimped skirt away from the retaining nut and unscrew. Remove the collets remembering to save these and the retaining nut as they are not supplied as spares. Fitting is the opposite to removal but ensure the collets and threads are lightly greased with lubricating compound such as Molybdenum Sulphide.
If a new disc is being fitted then crimp the collet retaining nut securely across two corners by deforming the disc's thin metal skirt. If the original disc is being fitted then re-crimp using a fresh part of the skirt.

*Important note

When a balancing disc is installed, the valve body should be mounted with the upstream fluid flowing into the upper valve chamber first, so the fluid pressure acts on top of the balancing disc. This is opposite to normal installation. If a balancing disc is upgrading or replacing a standard disc, the original valve body must be turned around in the pipeline and permanently marked with a new flow arrow indicating the changed direction of flow. See Section 3.4 for additional information.

6.6 Final assembly

Ensure the bellows support collar and gaskets (**10a, 10b**) are accurately aligned with the bonnet (**2**) before final assembly into the body (**1**).
Tighten the bonnet bolts/nuts (**9**) evenly to the recommended tightening torque (See Table 1).

Table 1 Recommended bonnet tightening torques N m (lbf ft)

Size	mm	BSA1/BSA1T	BSA2/BSA2T	BSA3/BSA3T	
		PN16 JIS/KS 10K	PN16/PN25	PN40	ASME 150/300 JIS/KS 20K
DN15 - DN32	17 A/F	20 - 25 (15 - 18)	35 - 40 (26 - 29)	35 - 40 (26 - 29)	50 - 55 (36 - 40)
DN40 - DN65	19 A/F	40 - 45 (29 - 33)	55 - 60 (40 - 44)	55 - 60 (40 - 44)	85 - 90 (63 - 66)
DN80 - DN150	24 A/F	70 - 80 (51 - 59)	130 - 140 (95 - 103)	130 - 140 (95 - 103)	190 - 200 (140 - 147)
DN200	30 A/F	180 - 200 (132 - 147)	260 - 280 (191 - 206)	260 - 280 (191 - 206)	300 - 320 (220 - 235)
DN250	36 A/F		480 - 520 (352 - 382)		

SHOPVALVES
GLOBAL VALVE SOLUTIONS | 阀门易购

SHOPVALVES
GLOBAL VALVE SOLUTIONS | 阀门易购

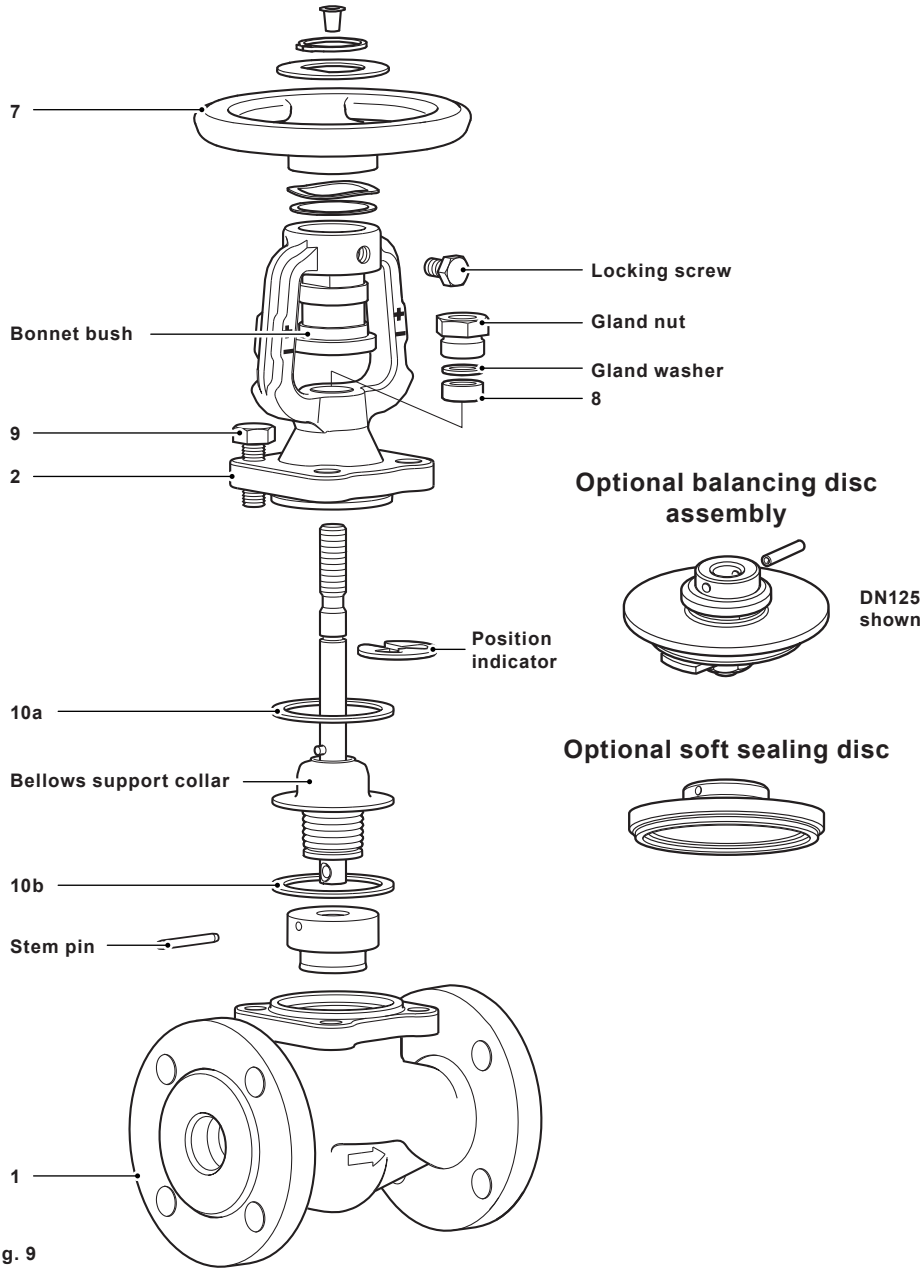

Fig. 9

SHOPVALVES
GLOBAL VALVE SOLUTIONS | 阀门易购

SHOPVALVES
GLOBAL VALVE SOLUTIONS | 阀门易购

6.7 How to replace the handwheel

Across the size range there are three hand wheel retention methods

Sizes	**DN15 - DN32**	have a 'D' drive hand wheel retained by a 'D' washer and circlip.
	DN40 - DN80	have a 'D' drive hand wheel retained by a top nut.
	DN100 - DN250	have a screwed hand wheel retained by a top nut.

Sizes DN15-DN32.

- To remove the handwheel, remove circlip using circlip pliers.
- Lift off the 'D' washer.
- The handwheel can then be lifted off.
- To refit the handwheel in the reverse of the procedure above.

Sizes DN40 to DN80.

- To remove the handwheel unscrew the main handwheel nut in a clockwise direction.
  Note: The thread in the handwheel nut is left handed, so it must be unscrewed in a clockwise direction.
  The handwheel can then be lifted off.
- To refit the handwheel in the reverse of the procedure above.
- Remember to tighten the handwheel nut to 40 N m (29 lbf ft) in an anticlockwise direction.

Sizes DN100 to DN250.

- To remove the handwheel unscrew the main handwheel nut in a clockwise direction.
  Note: The thread in the handwheel nut is left handed, so it must be unscrewed in a clockwise direction.
- Place a suitable spanner (a detailed drawing is available from Spirax Sarco) across the flats of the bonnet bush (2) and unscrew the handwheel in the normal way.
  Note: the handwheel maybe firmly secured on the bonnet bush.
- Refitting the handwheel is the opposite to removal.
- Apply Loctite 638 to the threads of the handwheel boss and tighten to 50 N m (36 lbf ft).
- Remember to tighten the handwheel nut to 40 N m (29 lbf ft) in an anticlockwise direction.

SHOPVALVES
GLOBAL VALVE SOLUTIONS | 阀门易购

SHOPVALVES
GLOBAL VALVE SOLUTIONS | 阀门易购

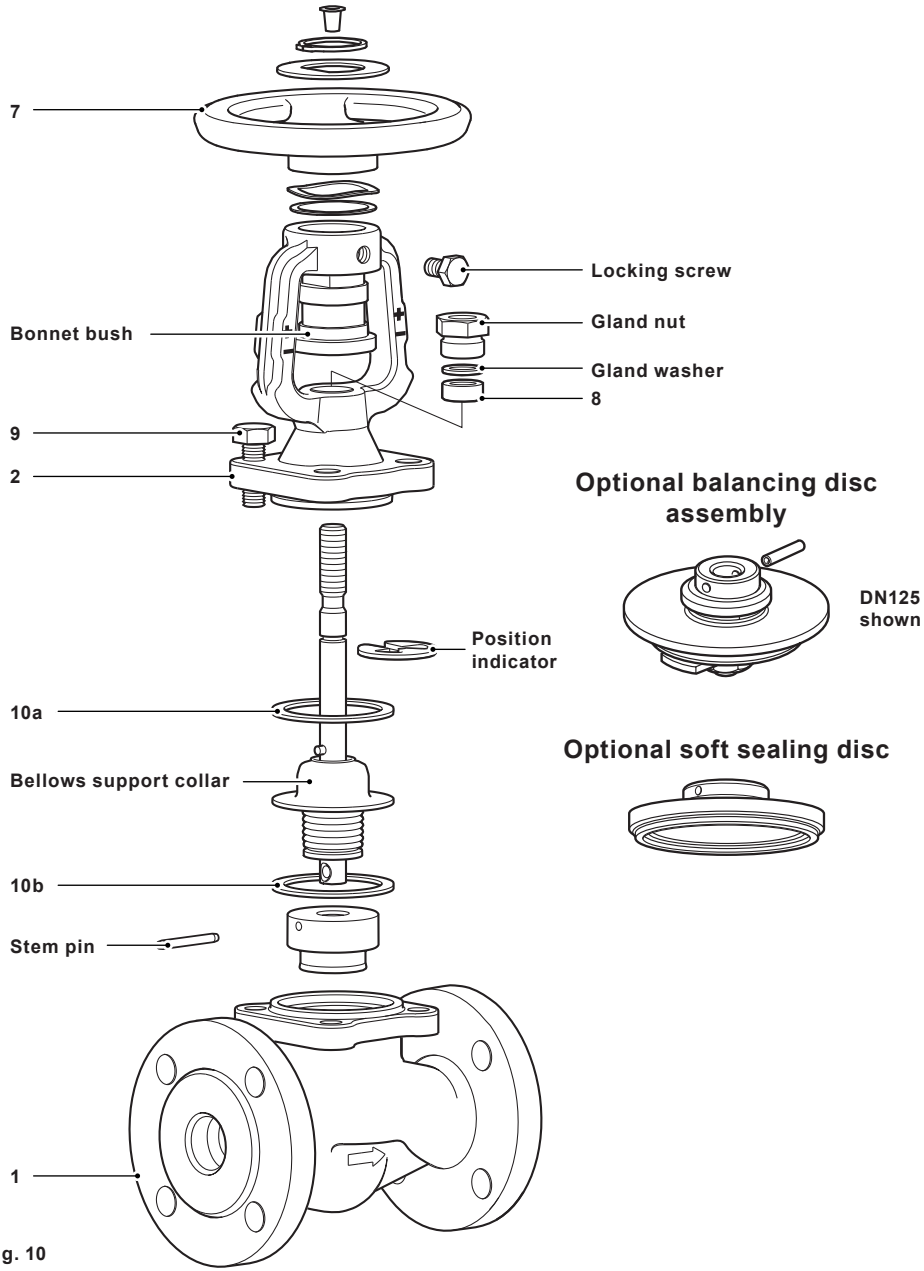

Fig. 10

SHOPVALVES
GLOBAL VALVE SOLUTIONS | 阀门易购

SHOPVALVES
GLOBAL VALVE SOLUTIONS | 阀门易购

7. Spare parts

The spare parts available are shown in heavy outline. Parts drawn in a grey line are not supplied as spares.

Available spares

Body/bonnet gasket and stem packing	**8, 10 (2 off)**
Stem and bellows assembly (state if BSAT or BSA)	**5, 6, 8, 10**
Disc (and optional disc where fitted) - state full description of the valve	**4, 8, 10**
Handwheel	**7**

How to order spares

Please note: for customer convenience spares are supplied in kits to ensure all the appropriate replacement parts are supplied to carry out a specific maintenance task. e.g. when a stem/bellows assembly is ordered, parts (**10a** and **10b**), (**8**) and (**6, 5**) will be included in the kit.
Always order spares by using the description given in 'Available spares' and state the size and type of stop valve.
Example: 1 - Body/bonnet gasket and stem packing for a DN15 Spirax Sarco BSA2 PN16 bellows sealed stop valve.

Note: The gaskets contain sharp metal reinforcement, please handle with care.

SHOPVALVES
GLOBAL VALVE SOLUTIONS | 阀门易购

SHOPVALVES
GLOBAL VALVE SOLUTIONS | 阀门易购

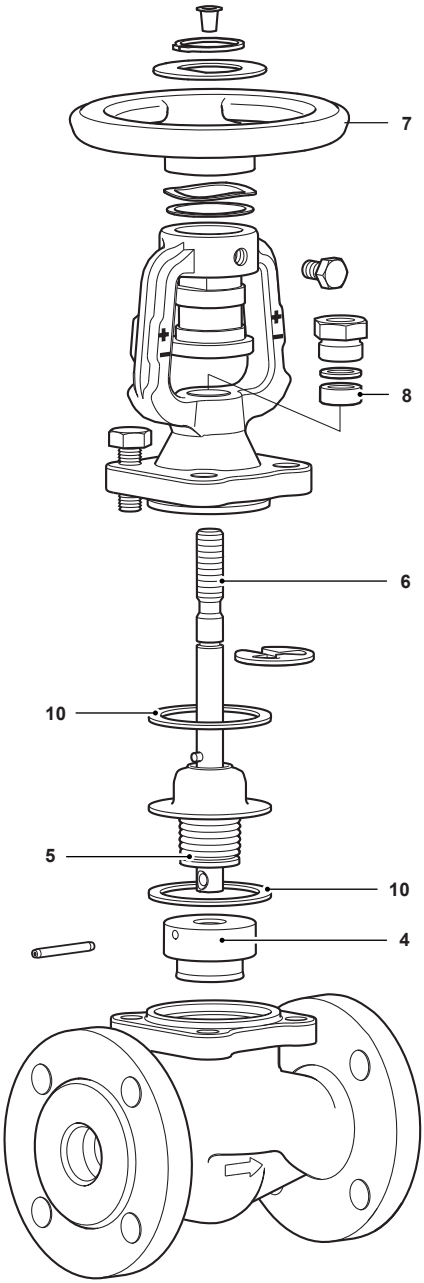

Optional balancing disc assembly

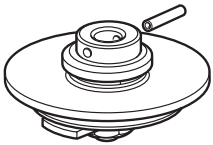

DN125 shown

Optional soft sealing disc

Fig. 11
BSAT shown

SHOPVALVES
GLOBAL VALVE SOLUTIONS | 阀门易购

SHOPVALVES
GLOBAL VALVE SOLUTIONS | 阀门易购

SHOPVALVES
GLOBAL VALVE SOLUTIONS | 阀门易购

SHOPVALVES
GLOBAL VALVE SOLUTIONS | 阀门易购

SHOPVALVES
GLOBAL VALVE SOLUTIONS | 阀门易购

SHOPVALVES
GLOBAL VALVE SOLUTIONS | 阀门易购

SHOPVALVES
GLOBAL VALVE SOLUTIONS | 阀门易购