SHOPVALVES
GLOBAL VALVE SOLUTIONS | 阀门易购

0222050/12

IM-S32-04
CMGT Issue 12

spirax sarco

Single and Double Window Sight Glasses and Sight Check

Installation and Maintenance Instructions

Single window sight glass

Double window sight glass

SG253 sight glass

Sight check

1. Safety information

2. General product information

3. Installation

4. Commissioning

5. Operation

6. Maintenance and spare parts
   Single window and double window sight glasses

7. Maintenance and spare parts
   SG253 sight glass

8. Maintenance and spare parts
   Sight check

© Copyright 2025

Printed in GB

SHOPVALVES
GLOBAL VALVE SOLUTIONS | 阀门易购

SHOPVALVES
GLOBAL VALVE SOLUTIONS | 阀门易购

1. Safety information

Safe operation of these products can only be guaranteed if they are properly installed, commissioned, used and maintained by qualified personnel (see Section 1.11) in compliance with the operating instructions. General installation and safety instructions for pipeline and plant construction, as well as the proper use of tools and safety equipment must also be complied with.

Warning

The gaskets used in these units contain thin stainless steel support rings which may cause physical injury if not handled and disposed of carefully.

Under certain conditions corrosive elements in condensate can affect the inside face of the sight tube/window, particularly where caustic alkali and hydrofluoric acid are present. It is recommended that the sight glass/sight check is periodically checked for thinning of the sight tube/window. If there is evidence of thinning or erosion damage then the sight tube/window should be replaced immediately. Always wear eye protection when viewing the contents of the sight glass/sight check.

Reasonable steps should be taken to protect personnel from injury in the unlikely event that the sight tube/window breaks.

1.1 Intended use

Referring to the Installation and Maintenance Instructions, nameplate and Technical Information Sheet, check that the products are suitable for the intended use / application.

The products listed below comply with the requirements of the European Pressure Equipment Directive 2014/68/EU and carry the CE mark with the Notify Body number when so required.

The products fall within the following Pressure Equipment Directive/(Safety) Regulations categories:

Product		Group 2 Gases	Group 2 Liquids
Single window sight glass	DN10 - DN25	SEP	SEP
Double window sight glass	DN15 - DN50	SEP	SEP
SG253 sight glass	DN15 - DN40	SEP	SEP
	DN50	1	SEP

SHOPVALVES
GLOBAL VALVE SOLUTIONS | 阀门易购

SHOPVALVES
GLOBAL VALVE SOLUTIONS | 阀门易购

i) These products have been specifically designed for use on steam, compressed air, water and other industrial fluids that are in Group 2 of the above-mentioned EU Pressure Equipment Directive.

ii) Check material suitability, pressure and temperature and their maximum and minimum values. If the maximum operating limits of the product are lower than those of the system in which it is being fitted, or if malfunction of the product could result in a dangerous overpressure or overtemperature occurrence, ensure a safety device is included in the system to prevent such over-limit situations.

iii) Determine the correct installation situation and direction of fluid flow.

iv) Spirax Sarco products are not intended to withstand external stresses that may be induced by any system to which they are fitted. It is the responsibility of the installer to consider these stresses and take adequate precautions to minimise them.

v) Remove protection covers from all connections and protective film from all name-plates, where appropriate, before installation on steam or other high temperature applications.

vi) Prior to use, the user shall ensure the fluid compatibility with the equipment material.

1.2 Access

Ensure safe access and if necessary a safe working platform (suitably guarded) before attempting to work on the product. Arrange suitable lifting gear if required.

1.3 Lighting

Ensure adequate lighting, particularly where detailed or intricate work is required.

1.4 Hazardous liquids or gases in the pipeline

Consider what is in the pipeline or what may have been in the pipeline at some previous time. Consider: flammable materials, substances hazardous to health, extremes of temperature.

1.5 Hazardous environment around the product

Consider: explosion risk areas, lack of oxygen (e.g. tanks, pits), dangerous gases, extremes of temperature, hot surfaces, fire hazard (e.g. during welding), excessive noise, moving machinery.

1.6 Isolation

Consider the effect on the complete system of the work proposed. Will any proposed action (e.g. closing isolation valves, electrical isolation) put any other part of the system or any personnel at risk?

Dangers might include isolation of vents or protective devices or the rendering ineffective of controls or alarms. Ensure isolation valves are turned on and off in a gradual way to avoid system shocks.

SHOPVALVES
GLOBAL VALVE SOLUTIONS | 阀门易购

SHOPVALVES
GLOBAL VALVE SOLUTIONS | 阀门易购

1.7 Pressure

Before attempting any maintenance consider what is or may have been in the pipeline. Ensure that any pressure is isolated and safely vented to atmospheric pressure before attempting to maintain the product, this is easily achieved by fitting Spirax Sarco depressurisation valves type DV (see separate literature for details) and consider double isolation (double block and bleed) and the locking or labelling of closed valves. Do not assume that the system is depressurised even when a pressure gauge indicates zero.

1.8 Temperature

Allow time for temperature to normalise after isolation to avoid the danger of burns and consider whether protective clothing (including safety glasses) is required.

1.9 Tools and consumables

Before starting work ensure that you have suitable tools and/or consumables available. Use only genuine Spirax Sarco replacement parts.

1.10 Protective clothing

Consider whether you and/or others in the vicinity require any protective clothing to protect against the hazards of, for example, chemicals, high/low temperature, radiation, noise, falling objects, and dangers to eyes and face.

1.11 Permits to work

All work must be carried out or be supervised by a suitably competent person.
Installation and operating personnel should be trained in the correct use of the product according to the Installation and Maintenance Instructions.
Where a formal 'permit to work' system is in force it must be complied with. Where there is no such system, it is recommended that a responsible person should know what work is going on and, where necessary, arrange to have an assistant whose primary responsibility is safety.
Post 'warning notices' if necessary.

1.12 Handling

Manual handling of large and/or heavy products may present a risk of injury. Lifting, pushing, pulling, carrying or supporting a load by bodily force can cause injury particularly to the back. You are advised to assess the risks taking into account the task, the individual, the load and the working environment and use the appropriate handling method depending on the circumstances of the work being done.

1.13 Residual hazards

In normal use the external surface of the product may be very hot. If used at the maximum permitted operating conditions the surface temperature of some products may reach temperatures of 100 °C (212 °F).
Many products are not self-draining. Take due care when dismantling or removing the product from an installation (refer to 'Maintenance instructions').

SHOPVALVES
GLOBAL VALVE SOLUTIONS | 阀门易购

SHOPVALVES
GLOBAL VALVE SOLUTIONS | 阀门易购

1.14 Freezing

Provision must be made to protect products which are not self-draining against frost damage in environments where they may be exposed to temperatures below freezing point.

1.15 Disposal

Unless otherwise stated in the Installation and Maintenance Instructions, these products are recyclable and no ecological hazard is anticipated with their disposal providing due care is taken, except:

Please visit the Spirax Sarco product compliance web pages:
https://www.spiraxsarco.com/product-compliance
for up to date information on any substances of concern that may be contained within this product. Where no additional information is provided on the Spirax Sarco product compliance web page, this product may be safely recycled and/or disposed providing due care is taken. Always check your local recycling and disposal regulations.

1.16 Returning products

Customers and stockists are reminded that under EC Health, Safety and Environment Law, when returning products to Spirax Sarco they must provide information on any hazards and the precautions to be taken due to contamination residues or mechanical damage which may present a health, safety or environmental risk. This information must be provided in writing including Health and Safety data sheets relating to any substances identified as hazardous or potentially hazardous.

SHOPVALVES
GLOBAL VALVE SOLUTIONS | 阀门易购

SHOPVALVES
GLOBAL VALVE SOLUTIONS | 阀门易购

2. General product information

2.1 Single window and double window sight glasses

General description

A range of single and double window sight glasses having screwed connections available in either brass or bronze depending on size.

Note: For additional information see the following Technical Information Sheet TI-P022-05.

Fig. 1
Single window sight glass

Fig. 2
Double window sight glass

Sizes and pipe connections

Single window	½", ¾" and 1" screwed BSP T Rp (ISO 7-1) or NPT
Double window	½", ¾", 1" 1½" and 2" screwed BSP T Rp (ISO 7-1) or NPT

SHOPVALVES
GLOBAL VALVE SOLUTIONS | 阀门易购

SHOPVALVES
GLOBAL VALVE SOLUTIONS | 阀门易购

Pressure/temperature limits

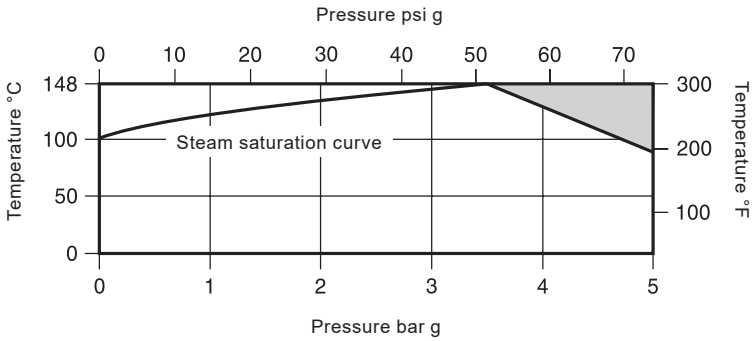

The product **must not** be used in this region.

Body design conditions			PN5
PMA	Maximum allowable pressure	5 bar g @ 90 °C	(72.5 psi g @ 194 °F)
TMA	Maximum allowable temperature	148 °C @ 3.5 bar g	(298.4 °F @ 50.75 psi g)
Minimum allowable temperature		-29 °C	(-20.2 °F)
PMO	Maximum operating pressure for saturated steam service	3.5 bar g	(50.75 psi g)
TMO	Maximum operating temperature	148 °C @ 3.5 bar g	(298.4 °F @ 50.75 psi g)
Minimum operating temperature **Note**: For lower temperatures consult Spirax Sarco.		0 °C	(32 °F)
Designed for a maximum cold hydraulic test pressure of:		7 bar g	(101.5 psi g)
PTMX	Maximum test pressure (steam service)	3.5 bar g	(50.75 psi g)

SHOPVALVES
GLOBAL VALVE SOLUTIONS | 阀门易购

SHOPVALVES
GLOBAL VALVE SOLUTIONS | 阀门易购

2.2 SG253 sight glass

General description

The SG253 is an SG iron double window sight glass with flanged connections.

Note: For additional information see the following Technical Information Sheet TI-P130-01.

Fig. 3
SG253 sight glass

Sizes and pipe connections

DN15, DN20, DN25, DN32, DN40 and DN50.
Flanged EN 1092 PN25 and BS 1560 ASME (ANSI) B 1.20.1.

SHOPVALVES
GLOBAL VALVE SOLUTIONS | 阀门易购

SHOPVALVES
GLOBAL VALVE SOLUTIONS | 阀门易购

Pressure/temperature limits

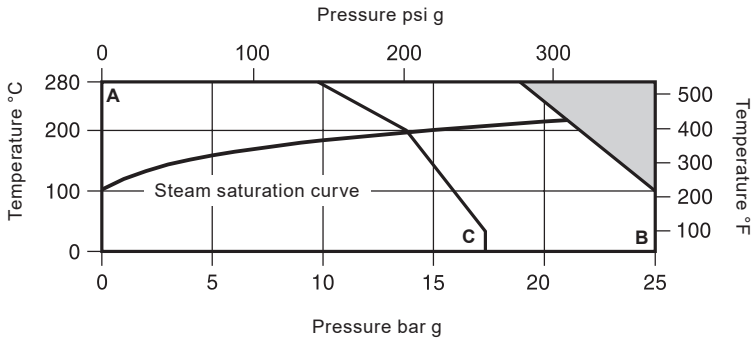

The product **must not** be used in this region.

A - B Screwed, socket weld, butt weld and flanged ANSI 300.

A - C Flanged BS 1560 ASME (ANSI) Class 150.

Body design conditions			PN25 and ASME (ANSI) 150	
PMA	Maximum allowable pressure	PN25	25 bar g @ 100 °C	(362.5 psi g @ 212 °F)
		ASME 150	17.2 bar g @ 35 °C	(249.5 psi g @ 95 °F)
TMA	Maximum allowable temperature	PN25	280 °C @ 18 bar g	(536 °F @ 261 psi g)
		ASME 150	280 °C @ 10 bar g	(536 °F @ 145 psi g)
Minimum allowable temperature			-10 °C	(14 °F)
PMO	Maximum operating pressure for saturated steam service	PN25	21 bar g	(304.5 psi g)
		ASME 150	13.8 bar g	(200.1 psi g)
TMO	Maximum operating temperature		280 °C @ 18 bar g	(536 °F @ 261 psi g)
Minimum operating temperature **Note**: For lower temperatures consult Spirax Sarco.			0 °C	(32 °F)
Designed for a maximum cold hydraulic test pressure of:		PN25	38 bar g	(551 psi g)
		ASME 150	30 bar g	(435 psi g)
PTMX	Maximum test pressure (steam service)	PN25	21 bar g	(304.5 psi g)
		ASME 150	13.8 bar g	(200.1 psi g)

SHOPVALVES
GLOBAL VALVE SOLUTIONS | 阀门易购

SHOPVALVES
GLOBAL VALVE SOLUTIONS | 阀门易购

2.3 Sight check

General description

A sight check is a combined sight glass and check valve. It is used to observe discharges from steam traps. The position of the ball check indicates whether or not condensate is flowing. Where condensate rises after the trap it eliminates the need for a separate check valve thus simplifying installation.
It is particularly useful for commissioning steam traps fitted with a steam lock release (SLR) unit.
It can also be used on other liquid lines where the materials of construction are compatible.

Note: For additional information see the following Technical Information Sheet TI-P022-01.

Fig. 4
Sight check

Sizes and pipe connections

½", ¾" and 1" screwed BSP T Rp (ISO 7-1) or NPT.

SHOPVALVES
GLOBAL VALVE SOLUTIONS | 阀门易购

SHOPVALVES
GLOBAL VALVE SOLUTIONS | 阀门易购

Pressure/temperature limits

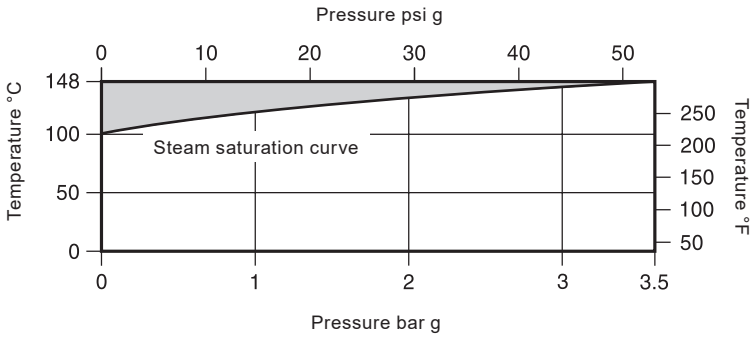

The product **must not** be used in this region.

Body design conditions			PN3.6
PMA	Maximum allowable pressure	3.5 bar g @ 148 °C	(50.75 psi g @ 295.6 °F)
TMA	Maximum allowable temperature	148 °C @ 3.5 bar g	(294.8 °F 50.25 psi g)
Minimum allowable temperature		-10 °C	(14 °F)
PMO	Maximum operating pressure for saturated steam service	3.5 bar g	(50.75 psi g)
TMO	Maximum operating temperature	148 °C 3.5 bar g	(295.6 °F @ 50.75 psi g)
Minimum operating temperature Note: For lower temperatures consult Spirax Sarco.		0 °C	(32 °F)
Designed for a maximum cold hydraulic test pressure of:		7 bar g	(101.5 psi g)
PTMX	Maxiumum test pressure (steam service)	3.5 bar g	(50.75 psi g)

SHOPVALVES
GLOBAL VALVE SOLUTIONS | 阀门易购

SHOPVALVES
GLOBAL VALVE SOLUTIONS | 阀门易购

3. Installation

Note: Before actioning any installation observe the 'Safety information' in Section 1.

Warning

Under certain conditions corrosive elements in condensate can affect the inside face of the sight tube/window, particularly where caustic alkali and hydrofluoric acid are present. It is recommended that the sight glass/sight check is periodically checked for thinning of the sight tube/window. If there is evidence of thinning or erosion damage then the sight tube/window should be replaced immediately. Always wear eye protection when viewing the contents of the sight glass/sight check.

Reasonable steps should be taken to protect personnel from injury in the unlikely event that the sight tube/window breaks.

Sight glasses and sight checks can be fitted in either a horizontal or vertical line (flow upwards only for sight check) on the outlet side of a steam trap. Where the trap is a blast discharge type e.g. thermodynamic, the sight glass and sight check must be fitted at least 1 m (3 ft) from the trap. This is to ensure that the glass is not subjected to thermal shock or pressure. Reasonable steps should be taken to protect personnel from injury in the unlikely event that the glass breaks.

Ensure access is available for maintenance purposes.

4. Commissioning

After installation or maintenance ensure that the system is fully functional. Carry out tests on any alarms or protective devices.

SHOPVALVES
GLOBAL VALVE SOLUTIONS | 阀门易购

SHOPVALVES
GLOBAL VALVE SOLUTIONS | 阀门易购

5. Operation

5.1 Sight glasses

The sight glass has a smooth concentric reduction in the inlet connection which promotes turbulence in the sight glass when the fluid is passing through it. The turbulent flow inside the sight glass permits any fluid to be detected.

Sight glasses can be used to detect blocked valves, strainers, steam traps and other pipeline equipment. Sight glasses can also be used for inspection purposes, i.e. to compare the colour of the fluid at different stages of the process, enabling adjustments to be made quickly and effectively.

5.2 Sight checks

The sight check is a sight glass and check valve combination in one unit. A ball in the top of the flow tube is lifted off its seat by the fluid as it flows through the cylindrical window to the outlet connection. The ball movement makes the flow easy to see yet provides shut-off on reverse flow.

SHOPVALVES
GLOBAL VALVE SOLUTIONS | 阀门易购

SHOPVALVES
GLOBAL VALVE SOLUTIONS | 阀门易购

6. Maintenance and spare parts

Single window and double window sight glasses

Note: Before actioning any maintenance programme observe the 'Safety information' in Section 1.

Maintenance : How to renew the window(s) and gaskets:

- Isolate the sight glass and allow the pressure and temperature to reduce to ambient conditions.
- After isolation unscrew the bezel(s) (2) and remove old gaskets (4 and 5) and window(s) (3).
- Carefully clean the recess.
- Refit new gaskets and window(s), ensuring that a gasket (4) is fitted to either side of each window (3).
- Replace the bezel(s) and tighten to the recommended torque (see Table 1).
- After maintenance has been completed, isolation valves should opened slowly to allow pressure and temperature to build up in a controlled manner.
- Check for leaks.

Spare parts (for the single window and double window sight glasses)

The spare parts available are shown in solid outline. Parts drawn in a grey line are not supplied as spares.

Available spares		
	Set of windows and gaskets	**3, 4, 5**
	Set of gaskets	**4, 5**

How to order spares

Always order spares by using the description given in the column headed 'Available spares' and state the size and type of sight glass.

Example: 1 off Set of windows and gaskets for a Spirax Sarco 1" double window sight glass.

Table 1 Recommended tightening torques

Item	Part	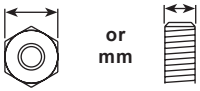	N m	(lbf ft)
2	Bezel		60 - 65	(43 - 43 - 47)

SHOPVALVES
GLOBAL VALVE SOLUTIONS | 阀门易购

SHOPVALVES
GLOBAL VALVE SOLUTIONS | 阀门易购

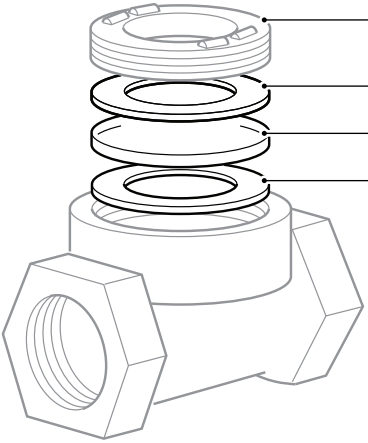

Fig. 5
Single window sight glass

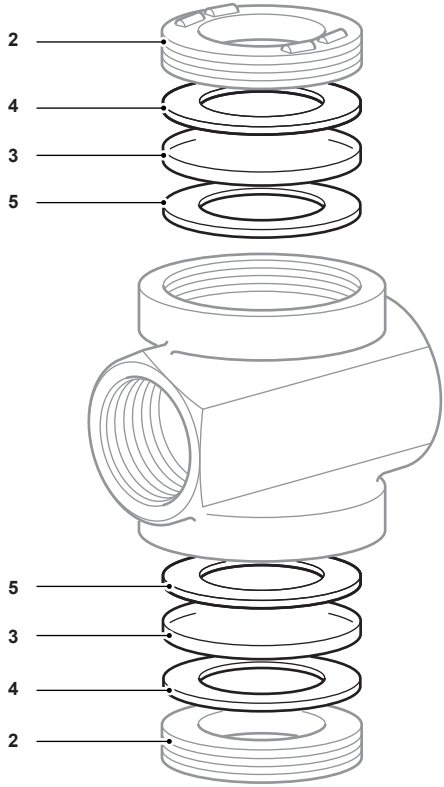

Fig. 6
Double window sight glass

SHOPVALVES
GLOBAL VALVE SOLUTIONS | 阀门易购

SHOPVALVES
GLOBAL VALVE SOLUTIONS | 阀门易购

7. Maintenance and spare parts

SG253 sight glass

Note: Before actioning any maintenance programme observe the 'Safety information' in Section 1.

Maintenance : How to renew the windows and gaskets:

- Isolate the sight glass and allow the pressure and temperature to reduce to ambient conditions.
- After isolation unscrew the cover bolts (5) and remove the old gaskets (4) and windows (3).
- Carefully clean the recess.
- Refit new gaskets and windows, ensuring that a gasket (4) is fitted to either side of each window (3).
- Replace the covers (2) and cover bolts (5) and tighten to the recommended torque (see Table 2).
- After maintenance has been completed, isolation valves should opened slowly to allow pressure and temperature to build up in a controlled manner.
- Check for leaks.

Spare parts (for the SG253 sight glass)

The spare parts available are shown in solid outline. Parts drawn in a grey line are not supplied as spares.

Available spares

Set of windows and gaskets	**3, 4**
Please note: For the DN25 and DN32 sizes a set of bolts (16 A/F M10 x 40) is also included due to the increased thickness of the glass.	
Set of gaskets	**4**

How to order spares

Always order spares by using the description given in the column headed 'Available spares' and state the size and type of the sight glass.

Example: 1 off Set of windows and gaskets for a Spirax Sarco DN15 SG253 sight glass.

Table 1 Recommended tightening torques

Item	Part			or mm	N m	(lbf ft)
5	DN15 - DN20		17 A/F	M10 x 30	12	(8.6)
	DN25 - DN32	Pre 08-2010:	17 A/F	M10 x 35	28	(20.6)
		Post 08-2010:	16 A/F	M10 x 40		
	DN40 - DN50		19 A/F	M12 x 40	38	(28.0)

SHOPVALVES
GLOBAL VALVE SOLUTIONS | 阀门易购

SHOPVALVES
GLOBAL VALVE SOLUTIONS | 阀门易购

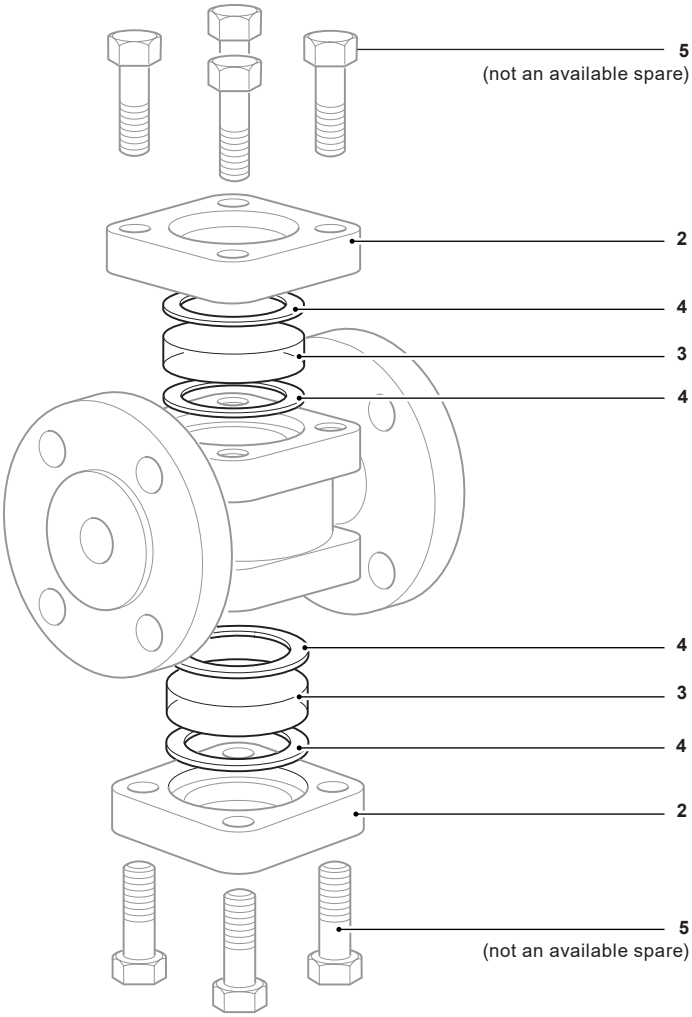

Fig. 7
SG253 sight glass

SHOPVALVES
GLOBAL VALVE SOLUTIONS | 阀门易购

SHOPVALVES
GLOBAL VALVE SOLUTIONS | 阀门易购

8. Maintenance and spare parts

Sight check

Note: Before actioning any maintenance programme observe the 'Safety information' in Section 1.

Maintenance : How to renew the sight tube:

- Isolate the sight check and allow the pressure and temperature to reduce to ambient conditions.
- After isolation remove the bolt and washers (7 and 8).
- Remove the cover (6).
- Take out the old gaskets (2) and the sight tube (3) and carefully clean out the recesses.
- Fit the new gaskets (2) supplied with sight tube (3) and reassemble. Tighten the bolts evenly to the recommended torque, ensuring the ends of the sight tube are centralised on the gaskets (see Table 4).
- It is advisable to do up the bolts little more than finger tight, retightening as necessary after a period of use to the recommended tightening torque (see Table 4).
- After maintenance has been completed, isolation valves should opened slowly to allow pressure and temperature to build up in a controlled manner.
- Check for leaks.

Maintenance : How to renew the discharge tube:

- Remove the cover (6) and the sight tube (3) the same way as 'To renew sight tube' above, and lift out the ball check (5).
- Using the notches, carefully unscrew the old discharge tube (4) and fit a new one.
- Renew the gaskets (2), fit a new ball check (5) and reassemble. Tighten the bolts evenly to the recommended torque, ensuring the ends of the sight tube are centralised on the gaskets (see Table 4).
- After maintenance has been completed, isolation valves should opened slowly to allow pressure and temperature to build up in a controlled manner.
- Check for leaks.

Table 1 Recommended tightening torques

Item	Part	or mm		N m	(lbf ft)
7	½", ¾" and 1"	10 A/F	M6 x 65	1.8 - 2.2	(1.3 - 1.6)
4	½" and ¼"		9/16" x 26 BSW	5 - 6	(3.6 - 4.3)
	1"		⅞" x 20 UNF	5 - 6	(3.6 - 4.3)

SHOPVALVES
GLOBAL VALVE SOLUTIONS | 阀门易购

SHOPVALVES
GLOBAL VALVE SOLUTIONS | 阀门易购

Spare parts (for the sight check)

The spare parts available are shown in solid outline. Parts drawn in a grey line are not supplied as spares.

Available spares

Sight tube assembly		2 (2 off), 3 (1 off)
Discharge tube assembly	(set of 2)	4, 5
Set of bolts and washers	(set of 4*)	7, 8
Gasket set	(packet of 6†)	2

Available spares are common to ½" and ¾" sizes, but not 1".

Note:

* Earlier models used studs, nuts and washers and these are contained in the set of bolts pack.

† Earlier models used ethylene propylene gaskets which were considerably thicker than graphite laminate.

How to order spares

Always order spares by using the description given in the column headed 'Available spares' and state the size of the sight check.

Example: 1 off Sight tube assembly
for a Spirax Sarco ½" sight check.

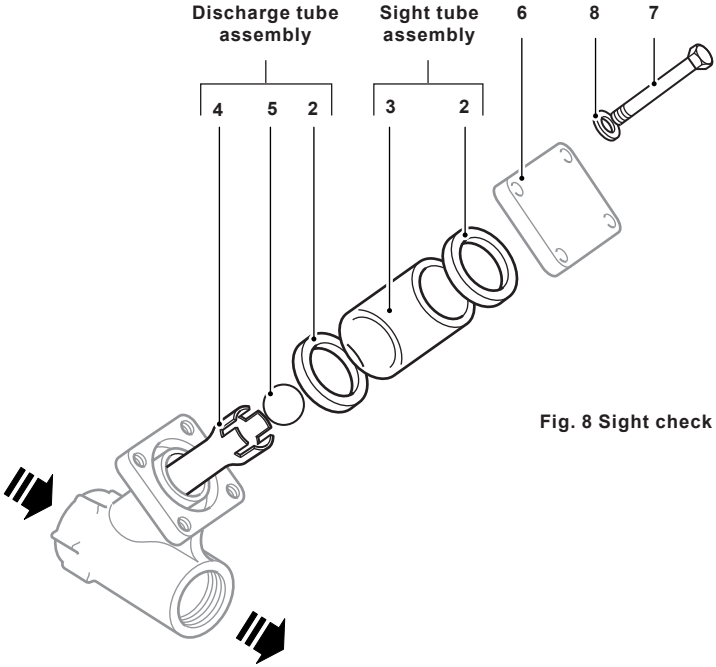

Fig. 8 Sight check

SHOPVALVES
GLOBAL VALVE SOLUTIONS | 阀门易购

SHOPVALVES
GLOBAL VALVE SOLUTIONS | 阀门易购

SHOPVALVES
GLOBAL VALVE SOLUTIONS | 阀门易购