SHOPVALVES
GLOBAL VALVE SOLUTIONS | 阀门易购

0060026/14

IM-P006-07
CTLS Issue 14

spirax sarco

DP143, DP143G, DP143H and DP163, DP163G, DP163Y Pilot Operated Pressure Reducing Valves

Installation and Maintenance Instructions

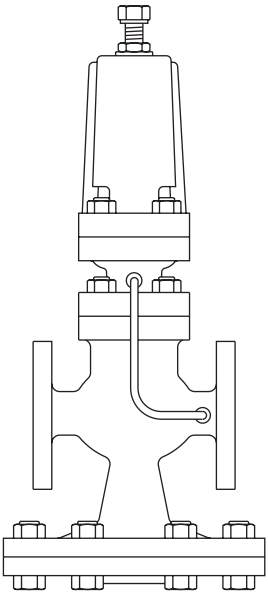

1. Safety information
2. General product information
3. Installation
4. Commissioning
5. Maintenance
6. Spare parts
7. Fault finding

© Copyright 2021

Printed in GB

SHOPVALVES
GLOBAL VALVE SOLUTIONS | 阀门易购

SHOPVALVES
GLOBAL VALVE SOLUTIONS | 阀门易购

SHOPVALVES
GLOBAL VALVE SOLUTIONS | 阀门易购

SHOPVALVES
GLOBAL VALVE SOLUTIONS | 阀门易购

1. Safety information

Safe operation of these products can only be guaranteed if they are properly installed, commissioned, used and maintained by qualified personnel (see Section 1.11) in compliance with the operating instructions. General installation and safety instructions for pipeline and plant construction, as well as the proper use of tools and safety equipment must also be complied with.

1.1 Intended use

Referring to these Installation and Maintenance Instructions, name-plate and Technical Information Sheet, check that the product is suitable for the intended use/application.
The products listed below comply with the requirements of the EU Pressure Equipment Directive/UK Pressure Equipment (Safety) Regulations and carry the CE mark when so required.

The products fall within the following Pressure Equipment Directive categories:

Product		Group 2 Gases
DP143 and all derivatives	DN15 - DN32	SEP
	DN40 - DN80	1
DP163 and all derivatives	DN15 - DN32	SEP
	DN40 - DN80	1

i) **The products have been specifically designed for use on steam, air and inert industrial gases which are in Group 2 of the above mentioned Pressure Equipment Directive. The products' use on other fluids may be possible but, if this is contemplated, Spirax Sarco should be contacted to confirm the suitability of the product for the application being considered.**

ii) **Check material suitability, pressure and temperature and their maximum and minimum values. If the maximum operating limits of the product are lower than those of the system in which it is being fitted, or if malfunction of the product could result in a dangerous overpressure or overtemperature occurrence, ensure a safety device is included in the system to prevent such over-limit situations.**

iii) **Determine the correct installation situation and direction of fluid flow.**

iv) **Spirax Sarco products are not intended to withstand external stresses that may be induced by any system to which they are fitted. It is the responsibility of the installer to consider these stresses and take adequate precautions to minimise them.**

v) **Remove protection covers from all connections and protective film from allname-plates, where appropriate, before installation on steam or other high temperature applications.**

1.2 Access

Ensure safe access and if necessary a safe working platform (suitably guarded) before attempting to work on the product. Arrange suitable lifting gear if required.

1.3 Lighting

Ensure adequate lighting, particularly where detailed or intricate work is required.

SHOPVALVES
GLOBAL VALVE SOLUTIONS | 阀门易购

SHOPVALVES
GLOBAL VALVE SOLUTIONS | 阀门易购

1.4 Hazardous liquids or gases in the pipeline

Consider what is in the pipeline or what may have been in the pipeline at some previous time. Consider: flammable materials, substances hazardous to health, extremes of temperature.

1.5 Hazardous environment around the product

Consider: explosion risk areas, lack of oxygen (e.g. tanks, pits), dangerous gases, extremes of temperature, hot surfaces, fire hazard (e.g. during welding), excessive noise, moving machinery.

1.6 The system

Consider the effect on the complete system of the work proposed. Will any proposed action (e.g. closing isolation valves, electrical isolation) put any other part of the system or any personnel at risk?
Dangers might include isolation of vents or protective devices or the rendering ineffective of controls or alarms. Ensure isolation valves are turned on and off in a gradual way to avoid system shocks.

1.7 Pressure systems

Ensure that any pressure is isolated and safely vented to atmospheric pressure. Consider double isolation (double block and bleed) and the locking or labelling of closed valves. Do not assume that the system has depressurised even when the pressure gauge indicates zero.

1.8 Temperature

Allow time for temperature to normalise after isolation to avoid danger of burns.

1.9 Tools and consumables

Before starting work ensure that you have suitable tools and/or consumables available. Use only genuine Spirax Sarco replacement parts.

1.10 Protective clothing

Consider whether you and/or others in the vicinity require any protective clothing to protect against the hazards of, for example, chemicals, high/low temperature, radiation, noise, falling objects, and dangers to eyes and face.

1.11 Permits to work

All work must be carried out or be supervised by a suitably competent person.
Installation and operating personnel should be trained in the correct use of the product according to the Installation and Maintenance Instructions.
Where a formal 'permit to work' system is in force it must be complied with. Where there is no such system, it is recommended that a responsible person should know what work is going on and, where necessary, arrange to have an assistant whose primary responsibility is safety.
Post 'warning notices' if necessary.

SHOPVALVES
GLOBAL VALVE SOLUTIONS | 阀门易购

SHOPVALVES
GLOBAL VALVE SOLUTIONS | 阀门易购

1.12 Handling

Manual handling of large and/or heavy products may present a risk of injury. Lifting, pushing, pulling, carrying or supporting a load by bodily force can cause injury particularly to the back. You are advised to assess the risks taking into account the task, the individual, the load and the working environment and use the appropriate handling method depending on the circumstances of the work being done.

1.13 Residual hazards

In normal use the external surface of the product may be very hot. If used at the maximum permitted operating conditions the surface temperature of some products may reach temperatures of 300 °C. Many products are not self-draining. Take due care when dismantling or removing the product from an installation (refer to 'Maintenance instructions').

1.14 Freezing

Provision must be made to protect products which are not self-draining against frost damage in environments where they may be exposed to temperatures below freezing point.

1.15 Disposal

Unless otherwise stated in the Installation and Maintenance Instructions, this product is recyclable and no ecological hazard is anticipated with its disposal providing due care is taken.

1.16 Returning products

Customers and stockists are reminded that under EC Health, Safety and Environment Law, when returning products to Spirax Sarco they must provide information on any hazards and the precautions to be taken due to contamination residues or mechanical damage which may present a health, safety or environmental risk. This information must be provided in writing including Health and Safety data sheets relating to any substances identified as hazardous or potentially hazardous.

Warning

If this product is not used in the manner specified by this IMI, then the protection provided may be impaired.

SHOPVALVES
GLOBAL VALVE SOLUTIONS | 阀门易购

SHOPVALVES
GLOBAL VALVE SOLUTIONS | 阀门易购

2. General product information

These instructions relate to the use of the DP143 (Section 2.1) and DP163 (Section 2.2) pilot operated pressure reducing valves on steam applications but can be used as a guide when the valve is used on compressed air applications. The DP143G and DP163G are recommended for compressed air applications, both having a nitrile seal for the main valve and pilot valve assemblies.
Note: For additional information see the relevant Technical Information Sheet.

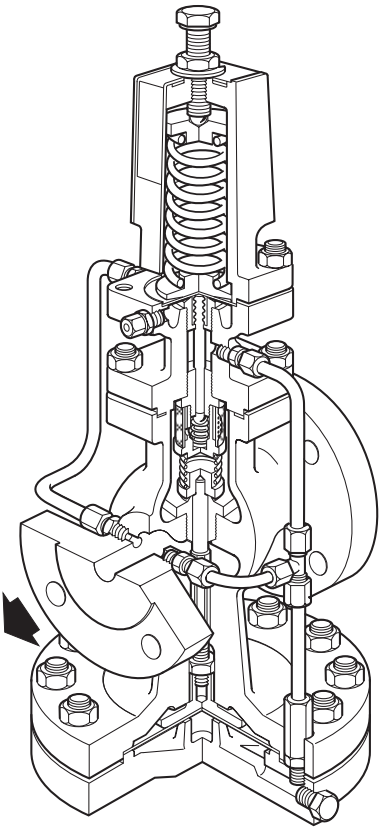

2.1 DP143, DP143G and DP143H

2.1.1 Description

The DP143, DP143G and DP143H pilot operated pressure reducing valves have been manufactured using cast steel.

Available types

DP143	Suitable for steam applications
DP143G	Is a soft seal version available for compressed air and inert industrial gases. **Note: It is not recommended for oxygen service.**
DP143H	Is a high temperature version for use up to 350 °C.

Sizes and pipe connections

DN15LC - Low Capacity version, DN15, DN20, DN25, DN32, DN40, DN50 and DN80.

Standard flanges:	EN 1092 PN25 and PN40, BS 10 Table 'J' and ASME 300.
Available on request:	ASME 150 and JIS 20.

SHOPVALVES
GLOBAL VALVE SOLUTIONS | 阀门易购

SHOPVALVES
GLOBAL VALVE SOLUTIONS | 阀门易购

2.1.2 Pressure/temperature limits

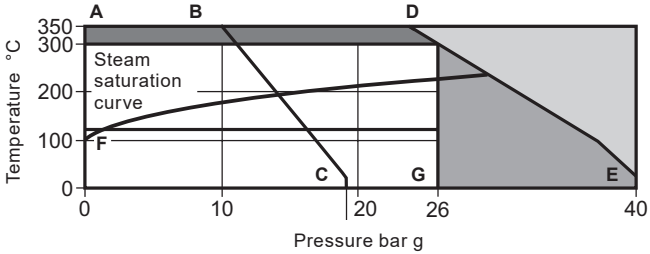

The product **must not** be used in this region.

Due to the material strength of the main diaphragm chamber the product must not be used in this region.

Use the high temperature DP143H version in this region.

A-D-E Flanged EN 1092, PN40, ANSI 300 and BS 10 Table J.

A-B-C Flanged ANSI 150.

F-G DP143G limited to 120 °C @ 26 bar g.

Note: Two colour coded pressure adjustment springs are available for the following downstream pressure ranges:

Red	0.2 bar g to 17 bar g
Grey	16.0 bar g to 24 bar g
Yellow	0.2 to 3.0 bar g (DP143Y only)

Body design conditions		PN40
Maximum design pressure	**A-B-C**	18.9 bar g @ 20 °C
	A-D-E	Limited to 26 bar g
Maximum design temperature		350 °C @ 24 bar g
Minimum design temperature		0 °C
Maximum upstream pressure for saturated steam service	**A-D-E**	26 bar g
	A-B-C	14 bar g
Maximum operating temperature	**DP143**	300 °C @ 26 bar g
	DP143G	120 °C @ 26 bar g
	DP143H	350 °C @ 24 bar g
Minimum operating temperature **Note:** For lower operating temperatures consult Spirax Sarco.		0 °C
Maximum differential pressure	**A-D-E**	26 bar
	A-B-C	14 bar
Designed for a maximum cold hydraulic test pressure of:		60 bar g
Note: With internals fitted, test pressure must not exceed:		40 bar g

SHOPVALVES
GLOBAL VALVE SOLUTIONS | 阀门易购

SHOPVALVES
GLOBAL VALVE SOLUTIONS | 阀门易购

2.2 DP163, DP163G and DP163H

2.2.1 Description

The DP163, DP163G and DP163Y pilot operated pressure reducing valves have been manufactured using stainless steel.

Available types

DP163	Suitable for steam applications
DP163G	Is a soft seal version available for compressed air and inert industrial gases. **Note: It is not recommended for oxygen service.**
DP163Y	Having a lower rate pressure control spring is suitable for steriliser/autoclave applications

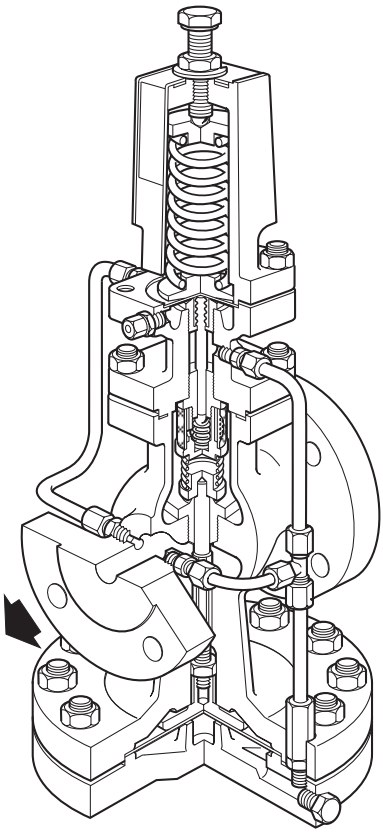

2.2.2 Sizes and pipe connections

DN15LC - Low Capacity version, DN15, DN20, DN25, DN32, DN40, DN50 and DN80.	
Standard flanges:	EN 1092 PN25 and PN40, BS 10 Table 'J' and ASME 300.
Available on request:	ASME 150 and JIS 20.

SHOPVALVES
GLOBAL VALVE SOLUTIONS | 阀门易购

SHOPVALVES
GLOBAL VALVE SOLUTIONS | 阀门易购

2.2.3 Pressure/temperature limits

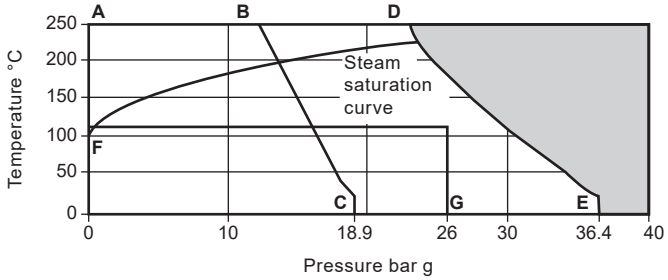

The product **must not** be used in this region.

A-D-E Flanged EN 1092 PN40, BS 10 Table J and ASME 300.

A-B-C Flanged ASME 150.

F-G DP163G limited to 120 °C @ 26 bar g.

Note: Two colour coded pressure adjustment springs are available for the following downstream pressure ranges:

Red 0.2 bar g to 17 bar g
Grey 16.0 bar g to 21 bar g
Yellow 0.2 bar g to 3.0 bar g (DP163Y only)

Body design conditions		PN40
Maximum design pressure	**A-D-E**	36.4 bar g @ 20 °C
	A-B-C	18.9 bar g @ 20 °C
Maximum design temperature		250 °C @ 24 bar g
Minimum design temperature		-10 °C
Maximum upstream pressure for saturated steam service	**A-D-E**	25 bar g
	A-B-C	14 bar g
Maximum operating temperature	**A-D-E**	250 °C @ 24 bar g
	A-B-C	250 °C @ 12.1 bar g
Minimum operating temperature **Note:** For lower operating temperatures consult Spirax Sarco.		0 °C
Maximum differential pressure	**A-D-E**	25 bar
	A-B-C	14 bar
Designed for a maximum cold hydraulic test pressure of:		60 bar g
Note: With internals fitted, test pressure must not exceed:		40 bar g

SHOPVALVES
GLOBAL VALVE SOLUTIONS | 阀门易购

SHOPVALVES
GLOBAL VALVE SOLUTIONS | 阀门易购

3. Installation

Note: Before actioning any installation observe the 'Safety information' in Section 1.

3.1 Supply (Figure 1)

The DP143 and DP163 pilot operated pressure reducing valves are supplied ready for fitting. The pressure adjusted spring will be the one most suitable for the downstream pressure quoted on the order but will not be pre-set.

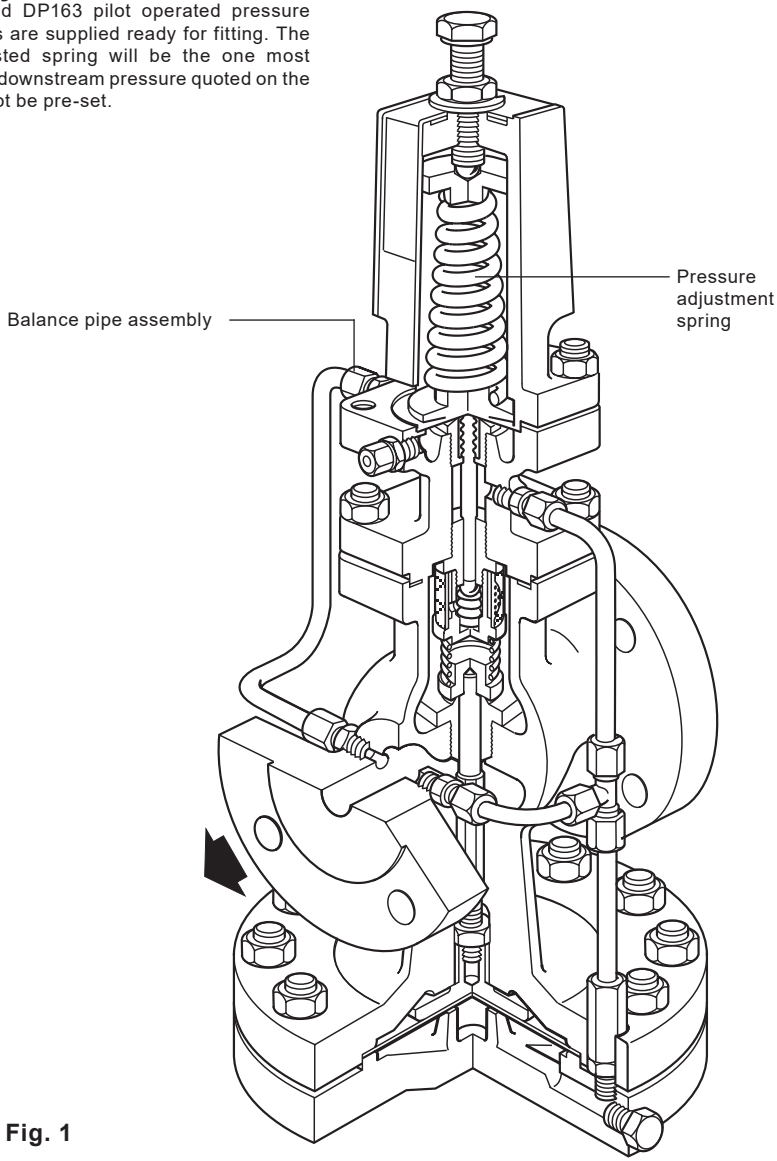

Fig. 1

SHOPVALVES
GLOBAL VALVE SOLUTIONS | 阀门易购

SHOPVALVES
GLOBAL VALVE SOLUTIONS | 阀门易购

3.2 Fitting (Figure 2 and Figure 3)

The valve should always be fitted in horizontal pipework with the main diaphragm chamber below the line. To meet high capacities or widely varying loads, or where stand-by facility is required, two or more valves may be used in parallel.

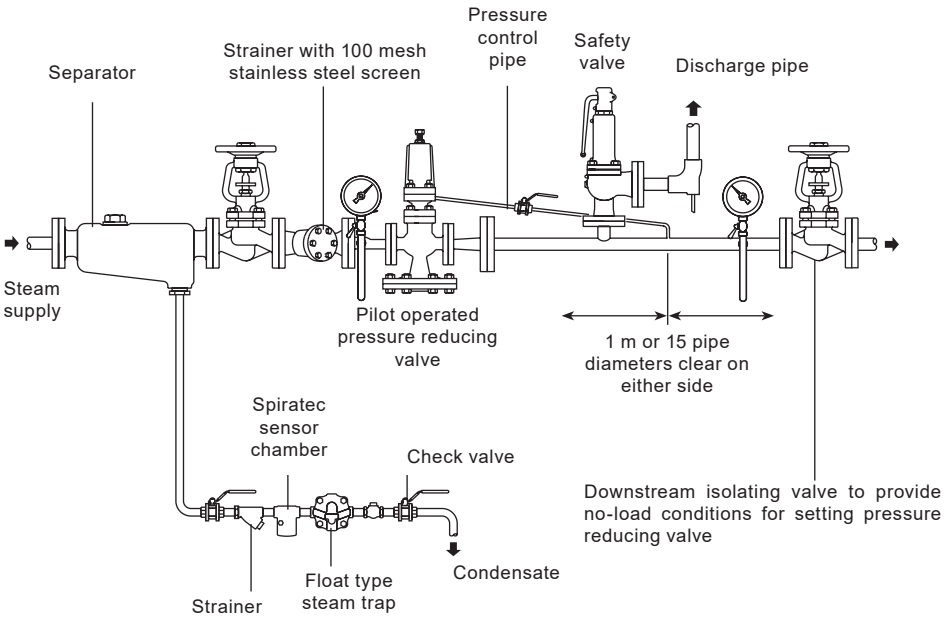

Fig. 2 Recommended installation

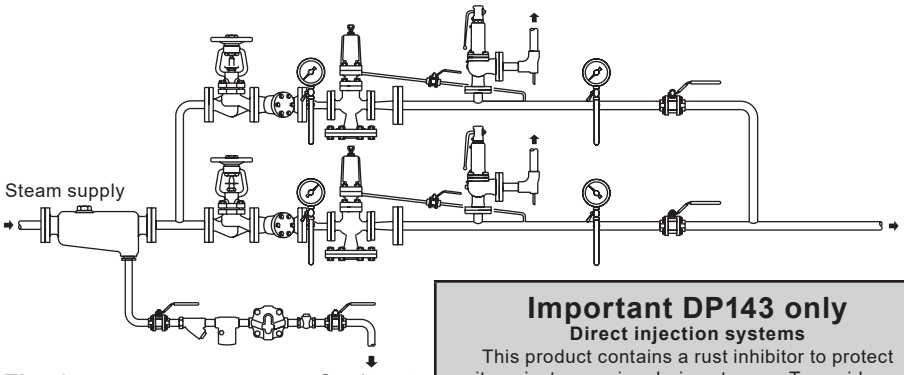

Fig. 3

Important DP143 only

Direct injection systems

This product contains a rust inhibitor to protect it against corrosion during storage. To avoid any possible contamination of your product, after first blowing down the approach pipework, we recommend that the valve is blown through thoroughly in order to remove any trace of the inhibitor.

SHOPVALVES
GLOBAL VALVE SOLUTIONS | 阀门易购

SHOPVALVES
GLOBAL VALVE SOLUTIONS | 阀门易购

3.3 Pipeline sizing

The piping on both sides of the valve must be sized so that velocities do not exceed 30 m/sec. This means that a properly sized valve will often be smaller than the upstream pipework and invariably the downstream pipework will be larger than the upstream pipework.

3.4 Pipeline stresses

Line stresses such as could be caused by expansion or inadequate support should not be imposed on the valve body.

3.5 Isolating valves

These should preferably be of the fullway type.

3.6 Removal of condensate

Ensure that the pipework is adequately drained so that the valve is supplied with dry steam. The ideal arrangement is to fit a separator in the steam supply. If by closing downstream isolating valves, the downstream pipework is likely to become flooded, a trap set should be installed to remove condensate forming as a result of radiant losses.

3.7 Preventing dirt

The valve should be protected by a pipeline strainer the same size as the upstream pipework and fitted with 100 mesh screen. The strainer should be fitted on its side to prevent the accumulation of water.

3.8 Pressure sensing

For applications that require closer control, improved stability or maximum capacity condition the balance pipe should be replaced by an external pressure sensing pipe (supplied by others) as follows:

Remove the balance pipe assembly.
The resulting ⅛" BSP tapping in the side of the body should be blanked using the plug provided in the linen bag attached to the valve (which also contains the fitting instructions). The other ⅛" BSP tapping in the side of the pilot valve chamber, should be blanked off using the plug fitted in the tapping provided on the front of the pilot valve chamber. Into this latter tapping, fit the brass compression fitting with brass compression ring which is also contained in the linen bag. This is suitable for the fitting of 6 mm O/D pipe. If suitable pipe is not available the compression fitting can be removed and ¼" nominal bore steel pipe screwed directly into the pilot valve chamber.
The pressure sensing pipe should be connected into the top of the reduced pressure main at a point where in either direction there is a length of straight pipe uninterrupted by fittings for at least 1 m or 15 pipe diameters whichever is the greater. It should be arranged with a positive fall so that any condensate can drain away from the DP valve. Where the size of the reduced pressure main makes it difficult to maintain a fall when entering the top of the main, the pressure control pipe may be connected in the side of the main.

3.9 Pressure gauges

It is essential to fit a pressure gauge on the downstream side so that the valve can be properly set. A pressure gauge on the upstream side is an essential diagnostic tool.

SHOPVALVES
GLOBAL VALVE SOLUTIONS | 阀门易购

SHOPVALVES
GLOBAL VALVE SOLUTIONS | 阀门易购

3.10 Bypass

If it is essential to maintain a constant supply of steam across the valve. It may be necessary to install a bypass to ensure continuation of supply when the reducing valve is being serviced Figure 4 and Figure 5.
The bypass valve will normally be the same size as the reducing valve. The handwheel should be padlocked to prevent unauthorised use, and when in use should be under constant manual supervision.
The bypass may be arranged above or to the side of the main assembly but never below it.

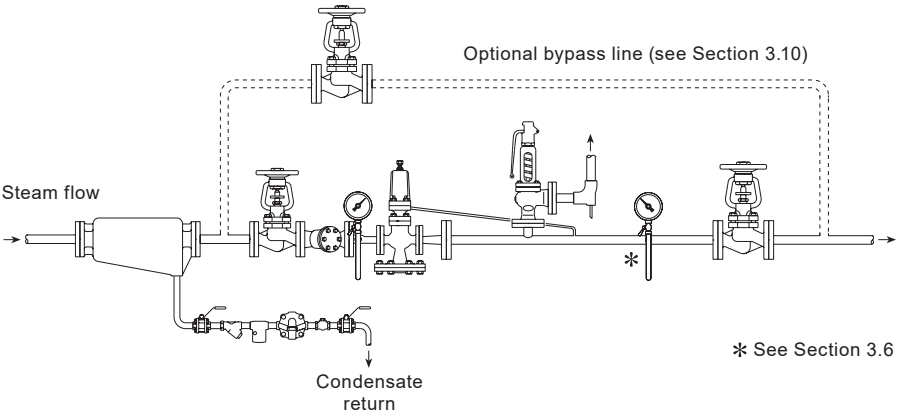

Fig. 4 Setting procedure sequence DP143, DP143G and DP143H

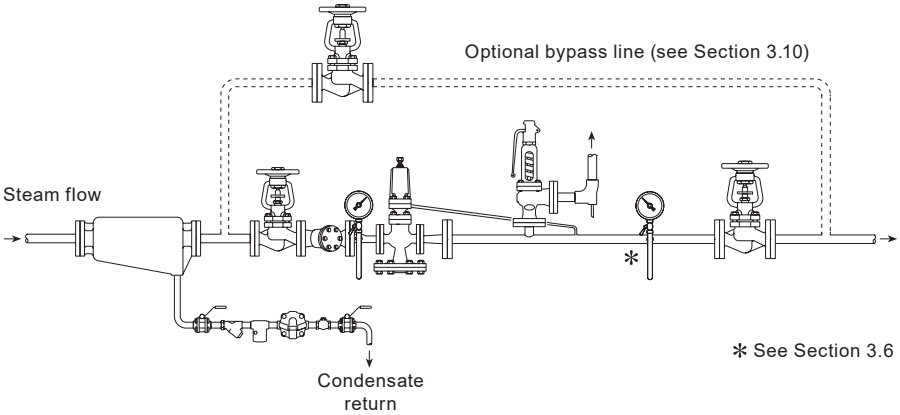

Fig. 5 Setting procedure sequence DP163, DP163G and DP163Y

SHOPVALVES
GLOBAL VALVE SOLUTIONS | 阀门易购

SHOPVALVES
GLOBAL VALVE SOLUTIONS | 阀门易购

3.11 Safety valve

A safety valve should be fitted to protect the downstream equipment from excessive pressure. It should be set to lift below the safe working pressure of the downstream equipment, and will normally be sized to pass the full capacity of the PRV should the PRV fail in the fully open position. The safety valve set pressure should take account of its reseat characteristic and the 'No-load' pressure setting of the PRV. For example, the typical blowdown value (reseat differential) for a DIN type safety valve is 10% of set pressure. The minimum possible safety valve set pressure must therefore equal the no load set pressure of the reducing valve plus the blowdown value of the safety valve plus a small margin of at least 0.1 bar. If the set pressure is any lower, if whatever reason the safety valve lifts it will not shut properly and will simmer, creating a leak which is often wrongly diagnosed as a result of a leaking reducing valve.
Discharge pipework should be taken to a safe place.

3.12 Position in relation to other control valves

Line or system isolation valves (**A**), either remotely actuated or manual, should be installed on the upstream side of the DP reducing valve.

Where there is downstream control equipment (**B**), particularly when it is fast acting (for instance pulsed piston actuated valves) ensure the control equipment is at least 50 pipe diameters away from the DP to prevent pressure pulses being transmitted back causing unstable operation and premature wear or if this is impractical an intermediate vessel can provide a similar benefit.

Where a safety valve (**C**) is required to protect the system downstream of a DP and where a control valve is also being used downstream of the DP, it is recommended that the safety valve is fitted downstream of the control valve rather than in between the DP and the control valve. If any slight leakage occurs this will avoid any pressure build-up causing nuisance operation of the safety valve but provide complete protection for the downstream system.

Where valves are installed downstream of the DP (**B**) the intermediate downstream pipework must be properly trapped (**D**) to ensure no condensate can buil up on the downstream side of the DP.

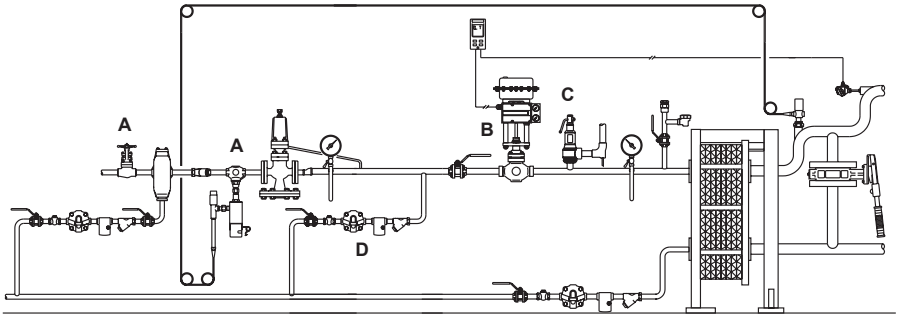

Fig. 6 The position of the pressure reducing valve in relation to other control equipment

SHOPVALVES
GLOBAL VALVE SOLUTIONS | 阀门易购

SHOPVALVES
GLOBAL VALVE SOLUTIONS | 阀门易购

4. Commissioning

4.1 Start-up (Setting the valve)

1. Ensure that all connections are properly made and that all valves are closed.
2. Check that the adjustment is turned fully anticlockwise until the spring is slack.
3. Open small valve in pressure control line.
4. Blow through the approach pipework by removing the cap and screen from the strainer protecting the steam trap draining the upstream pipework. Replace upon completion. Do not remove the screen from the main line strainer during this operation. Although this should remove most of the dirt which is present, it may be necessary to examine and clean the main line strainer at regular intervals.
5. Slowly open the upstream isolating valve until it is fully open.
6. Using a 19 mm A/F spanner slowly turn the adjustment screw in a clockwise direction until the desired downstream pressure reading is obtained.
7. Holding the adjustment screw in position with the spanner tighten down the lock-nut to secure the setting of the adjustment spring, making sure that the 'C' washer stays in position (Figure 1).
8. Slowly open the downstream valve until it is fully open.

4.2 Two or more valves in parallel

When more than one reducing valve is used it is an advantage to use two valves of unequal size, the smaller one being chosen to meet the lower load requirements and the larger valve to come into operation so that both meet the normal and maximum demand.
It is necessary to set each valve independently following the start-up procedure detailed in Section 4.1 but setting the smaller valve at some 0.1 bar higher than the larger one.
Each valve should be set against dead end conditions achieved by closing a downstream isolating valve.

SHOPVALVES
GLOBAL VALVE SOLUTIONS | 阀门易购

SHOPVALVES
GLOBAL VALVE SOLUTIONS | 阀门易购

5. Maintenance

Note:
Before actioning any maintenance programme observe the 'Safety information' in Section 1.

Warning:
The body gasket (15) contains a thin stainless steel support ring which may cause physical injury if not handled and disposed of correctly.

Warning - DP163
The 316 type stainless steel used in the construction of the DP163 product, particularly for screwed or close fitting parts, is very susceptible to galling or cold welding. This is an inherent characteristic of this type of material and great care should therefore be taken when dismantling or reassembling. If the application permits it is recommended that a light smear of a PTFE based grease is applied to any mating parts before reassembly.

5.1 Routine maintenance
It is recommended that the valve is dismantled once every 12 to 18 months for a complete overhaul and ideally this should be carried out with the valve removed from the line.
The parts that may require replacing or refurbishing are listed below:

- Main valve (**17**) and main valve seat (**18**)
- Pilot valve assembly (**13**)
- Pilot diaphragms (**9**)
- Main diaphragms (**23**)

A detailed procedure for servicing the above items is described in Sections 5.3 to 5.9.
In addition to the above items the pushrod (**26**) liner bush, and control pipework and fittings should be cleaned of any scale deposit if necessary.

5.2 Diaphragms and cleaning
If the valve is dismantled and either the main diaphragms or the pilot diaphragm are not renewed care must be taken not to turn the diaphragms over - refit them in exactly the same position as when dismantled. The control orifices in the adaptors of the control pipe assembly (**27**) as well as the balance pipe (**19** or **19A**) must be kept clear of dirt. Blow through with compressed air if necessary - do not use a drill on the control orifices, as enlargement of the orifices might upset the operation of the valve.

Main diaphragms used in the DP143 and DP163 reducing valves

Size of valve	Diaphragm diameter
DN15, DN15 LC, DN20	125 mm
DN25, DN32	166 mm
DN40, DN50	230 mm
DN80	300 mm

SHOPVALVES
GLOBAL VALVE SOLUTIONS | 阀门易购

SHOPVALVES
GLOBAL VALVE SOLUTIONS | 阀门易购

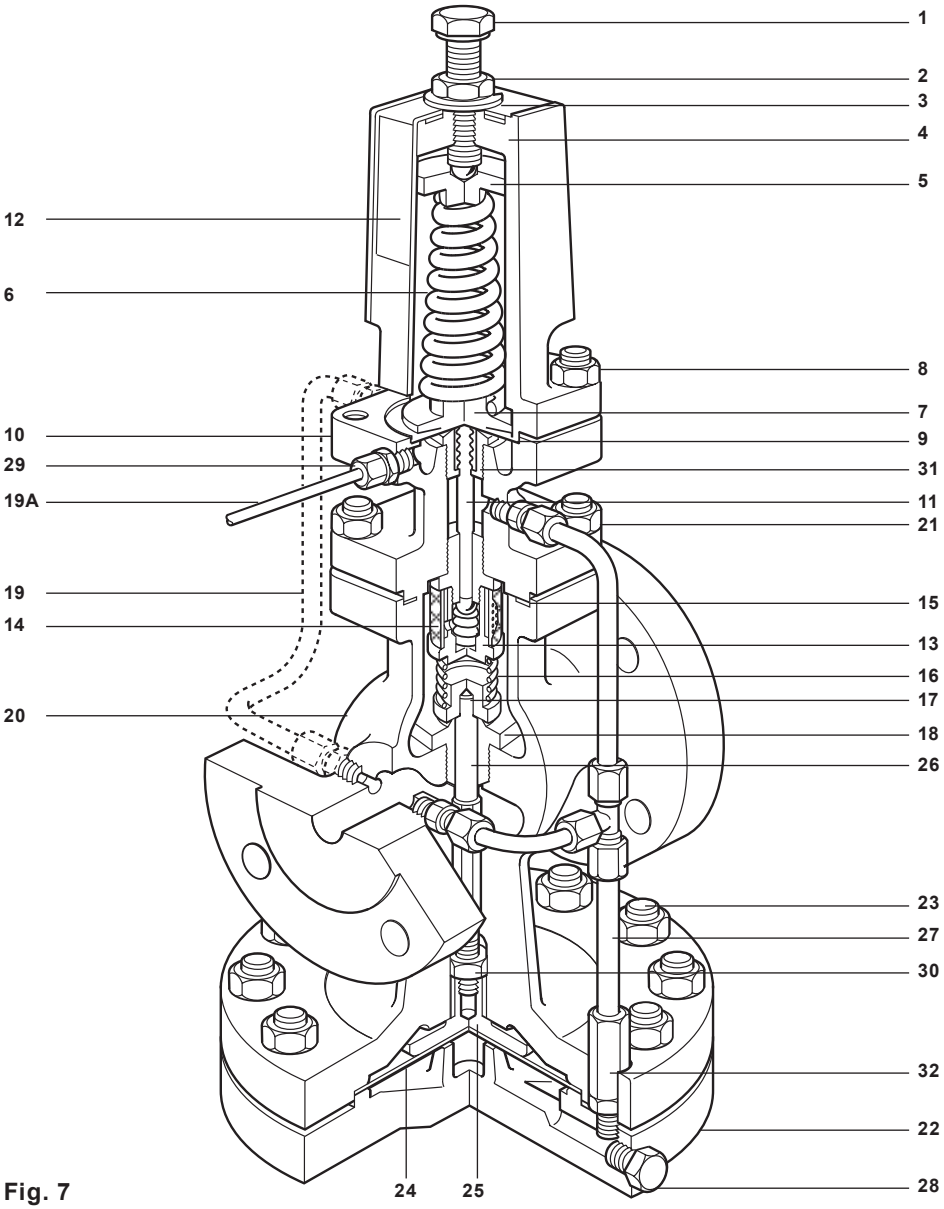

Fig. 7

SHOPVALVES
GLOBAL VALVE SOLUTIONS | 阀门易购

SHOPVALVES
GLOBAL VALVE SOLUTIONS | 阀门易购

5.3 Pressure adjustment springs and ranges

Three colour coded adjustment springs are available for the following reduced pressure ranges:	**Red**		0.2 to 17 bar
	Grey	**DP143**	16.0 to 24 bar
		DP163	16.0 to 21 bar
	Yellow	**DP163Y**	0.2 to 3 bar

5.4 How to renew or change the control spring

It is not necessary to isolate the valve in order to change the spring.

1. Release the lock-nut (**2**) and turn the adjustment screw (**1**) anticlockwise until the spring is slack.
2. Slide out the 'C' washer (**3**) from underneath the lock-nut and remove the cover (**12**).
3. Remove the old spring (**6**) and replace it with a new one remembering to replace the top spring plate (**5**).
4. Replace the cover and 'C' washer, and turn the adjustment screw clockwise until the desired pressure reading is obtained.
5. Holding the adjustment screw in position tighten down the lock-nut making sure the 'C' washer stays in position.

5.5 How to renew the pilot valve assembly and bellows seal

1. Isolate the reducing valve and zero the pressure.
2. Release the lock-nut (**2**) and turn the adjustment screw (**1**) anticlockwise until the spring is slack.
3. Slide out the 'C' washer (**3**) from underneath the lock-nut and remove the cover (**12**).
4. Remove the spring (**6**) and top spring plate (**5**).
5. Undo the 4 x M10 nuts (**8**) and remove the spring housing (**4**), bottom spring plate (**7**) and the diaphragms (**9**).
6. Undo the pipework union nuts and release the 6 mm stainless steel pipework.
7. Undo the nuts (**21**) and remove the pilot valve housing (**10**) making sure that the main valve spring (**16**) is still positioned correctly on top of the main valve head (**17**).
8. Unscrew the pilot valve assembly (**13**) which includes the integral strainer screen (**14**) by using a 27 mm A/F socket and also remove the plunger (**11**).
9. Unscrew the bellows seal assembly (**31**) using a 24 mm A/F socket. If necessary this bellows seal assembly can be replaced.
10. With the bellows seal still removed screw in the new pilot valve assembly (**13**) and tighten down to a torque of 115 N m.
11. Insert the plunger (**11**) in from the top and check that there is a gap of 0.7 mm between the top of the plunger and a straight edge placed across the diaphragm location recess (See Figure 8).
    Note: Because of production tolerances the plunger is supplied slightly longer than is always required and it will generally be necessary to grind or machine material off the top end to give the correct length. After machining make sure the sharp edges are removed from the top of the plunger as these could damage the bellows. The 0.7 mm gap (see previous step 11) ensures that with the bellows seal fitted there is just a slight gap between it and the diaphragm whilst in its neutral position.

SHOPVALVES
GLOBAL VALVE SOLUTIONS | 阀门易购

SHOPVALVES
GLOBAL VALVE SOLUTIONS | 阀门易购

12. After locating the bellows seal assembly carefully over the plunger and tighten down to a torque of 115 N m.

13. Check with straight edge again, that with the top of the bellows pressed lightly onto the top of the plunger, there is a slight clearance - a mere line of light between the straight edge and the top of the bellows (see Figure 8).

14. Before reassembling the valve make sure that the gasket faces on both the pilot valve block and the body are clean and that the main valve spring (**16**) is positioned correctly on top of the main valve head.

15. Fit new gasket (**15**) and secure the pilot valve block assembly onto the body with the nuts (**11**). Tighten these nuts to the torques shown in Table 1, page 20.

16. Refit the 6 mm stainless steel pipework and retighten the union nuts to ensure a steam tight seal.

17. Refit the two diaphragms (**9**) making sure that they are fitted the same way round as they were removed and that all contact surfaces are clean. If necessary two new diaphragms can be fitted.

18. Place the bottom spring plate (**7**) in position and secure the spring housing with the 4 x M10 nuts (**8**) tightening to a torque of 50 N m.

19. Replace the spring (**6**) and the top spring plate (**5**) turning the adjustment screw (**1**) until it just locates on the top spring plate. Replace the cover (**12**) and the 'C' washer (**3**).

20. Bring the valve back into commission by following as many steps as are necessary in Section 4.1, 'Start-up'.

Table 1

Recommended tightening torques for the pilot valve block securing nuts item (21)

Size of valve	Nut size	Tightening torque
DN15LC, DN15 and DN20	M10	40 N m
DN25 to DN50	M12	60 N m
DN80	M12	80 N m

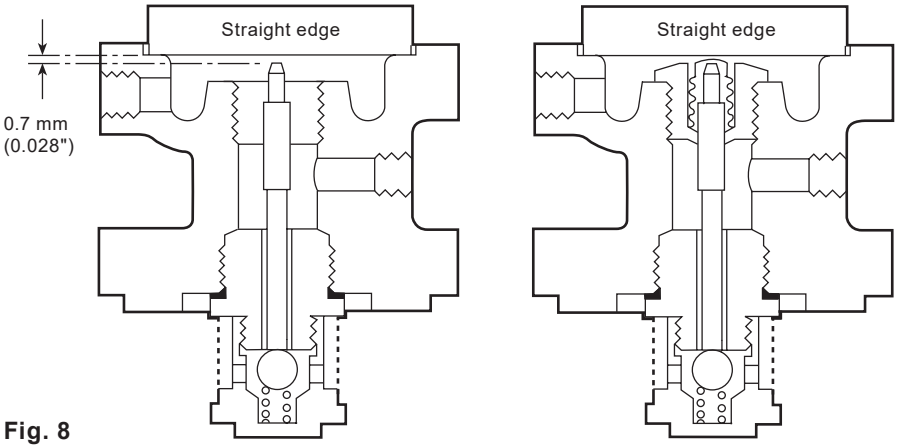

Fig. 8

SHOPVALVES
GLOBAL VALVE SOLUTIONS | 阀门易购

SHOPVALVES
GLOBAL VALVE SOLUTIONS | 阀门易购

5.6 How to clean the pilot valve strainer screen

1. Isolate the reducing valve and zero the pressure.
2. Release the lock-nut (**2**) and turn the adjustment screw (**1**) anticlockwise until the spring is slack.
3. Undo the union nuts and release the 6 mm stainless steel pipework.
4. Undo the nuts (**21**) and remove the pilot valve housing (**10**) complete with the spring housing assembly, making sure that the main valve spring (**16**) is positioned correctly on top of the main valve head (**17**).
5. Holding the pilot valve block upside down, unscrew the screen retaining nut using a 27 mm A/F spanner.
6. Remove the screen (**14**) for cleaning, taking care not to lose the small return spring (**13D**) and ball (**13C**) which can also be cleaned if necessary.
7. Refit the ball, spring and screen and refit the screen retaining nut (**13B**), tightening it to a torque of 15 N m.
8. Make sure that the gasket faces on both the pilot valve block and the body are clean. Make sure that the main valve spring (**16**) is positioned correctly on top of the main valve head (**17**).
9. Fit new gasket (**15**) and secure the pilot valve block assembly onto the body with the nuts (**21**). Tighten these nuts to the torque shown in Table 1.
10. Refit the 6 mm stainless steel pipework and retighten the union nuts to ensure a steam tight seal.
11. Bring the valve back into commission by following as many steps are as necessary in Section 4.1, 'Start-up'.

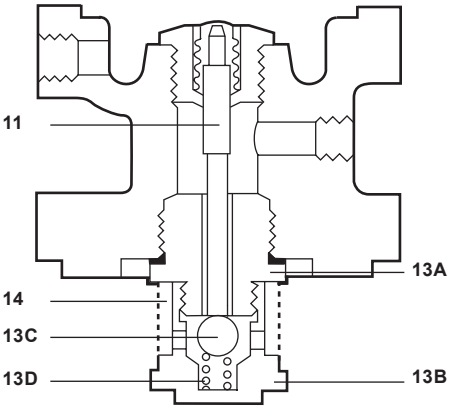

Fig. 9

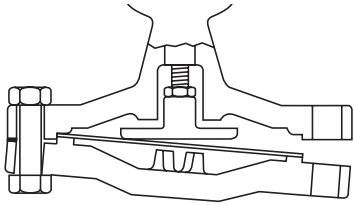

Fig. 10

SHOPVALVES
GLOBAL VALVE SOLUTIONS | 阀门易购

SHOPVALVES
GLOBAL VALVE SOLUTIONS | 阀门易购

5.7 How to renew the pilot valve diaphragms

1. Isolate the reducing valve and zero the pressure.
2. Release the lock-nut (**2**) and turn the adjustment screw (**1**) anticlockwise until the spring is slack.
3. Slide the 'C' washer (**3**) from underneath the lock-nut and remove the cover (**12**).
4. Remove the spring (**6**) and the top spring plate (**5**).
5. Undo the 4 x M10 nuts (**8**) and remove the spring housing (**4**), bottom spring plate (**7**)and the old diaphragms (**9**).
6. Refit 2 new diaphragms (**9**) making sure that all contact faces are clean.
7. Place the bottom spring plate (**7**) in position and secure the spring housing with the 4 x M10 nuts (**8**) tightening to a torque of 50 N m.
8. Replace the spring (**6**) and top spring plate (**5**), turn the adjustment screw (**1**) until it just locates on the top spring plate. Replace cover (**12**) and 'C' washer (**3**).
9. Bring the valve back into commission by following as many steps as are necessary in Section 4.1, 'Start-up'.

5.8 How to renew the main diaphragms

1. Isolate the reducing valve and zero the pressure.
2. Undo the long union nut (**32**) and pull it away.
3. Undo the M12 nuts and bolts (**23**) and drop away the lower diaphragm chamber (**22**), the two stainless steel diaphragms (**24**) and the main diaphragm plate and pushrod assembly (**25, 26, 30**).
4. Thoroughly clean off the lower diaphragm chamber and make sure that the contact surfaces are clean.
5. Replace the main diaphragm plate and pushrod assembly and loosely refit the lower diaphragm chamber on the two bolts either side of the union connection, see Figure 10 so that the spigot is located into the recess. Also ensure that the connecting stainless steel pipework is located into its fitting.
6. Bring the two main diaphragms together and slide into position, first easing the diaphragm plate upwards to clear, see Figure 10.
7. With the main diaphragms in position, push the lower diaphragm chamber home to locate in the recess and refit the M12 nuts and bolts. Tighten to a torque of 75 N m.
8. Retighten the long union nut to ensure a steam tight seal on the stainless steel pipework.
9. Bring the valve back into commission by following as many steps as are necessary in Section 4.1, 'Start-up'.

5.9 How to service or renew the main valve and seat

1. Isolate the pressure reducing valve and zero the pressure.
2. Undo the union nuts and release the 6 mm stainless steel pipework.
3. Undo the nuts (**21**) and remove the pilot valve block (**10**) complete with the spring housing assembly.
4. Remove the main valve spring (**16**) and the main valve head (**17**).
5. Using a socket remove the main seat (**18**), as shown in Table 2 (page 22).
   Note: A special tool is required for the DN80 valve.

SHOPVALVES
GLOBAL VALVE SOLUTIONS | 阀门易购

SHOPVALVES
GLOBAL VALVE SOLUTIONS | 阀门易购

Table 2 Recommended tightening torques for main valve seat item 18

Size of valve	Size of socket across flats	Tightening torques
DN15, DN15LC	30 mm A/F	110 - 120 N m
DN20	36 mm A/F	140 - 150 N m
DN25	41 mm A/F	230 - 250 N m
DN32	46 mm A/F	300 - 330 N m
DN40	—	400 - 490 N m
DN50	—	620 - 680 N m
DN80	—	600 - 700 N m

6. The seating faces of the main valve head and main seat may now be examined. If they are only slightly worn both the main valve head and main seat may be lapped on a flat plate using a fine grinding paste. **'G' version:** If there is wear or damage to the nitrile face then the head assembly must be replaced.

7. If either is badly worn or unfit for further use they will need to be replaced. However, as the seats and valve heads are not supplied as matched pairs, it is not particularly necessary to replace both items.

8. Making sure that the thread and seating surface in the body are clean refit the seat and tighten to the torque shown in Table 2.

9. Where a part has been fitted or where extensive lapping has taken place, it will be necessary to reset the main valve pushrod (**26**) to give the correct valve lift.

10. To do this it is necessary to expose the main diaphragm plate and pushrod assemblyby following steps 2 and 3 in Section 5.8.

11. Refit the pushrod assembly and replace the main valve head (**17**) making sure that it is located onto the main seat.

12. The main valve can now be opened by pushing on the plate (**25**) until it comes up against the stop on the body. See Figure 11. Check the valve lift by using a depth gauge as shown.

13. If the lift is different from that shown in the Table 3 below, slacken the lock-nut (**30**) and adjust the lift by screwing the pushrod (**26**) in or out of the main diaphragm plate (**25**). When the lift is correct, retighten the lock-nut (**30**).

14. Replace the lower end of the valve by following the steps 5 to 8 in Section 5.8.

15. Make sure that the gasket faces on both the pilot valve block and body are clean. Refit the main valve head (**17**) and replace the main valve spring (**16**) correctly on top of the main valve head.

16. Fit new gasket (**15**) and secure the pilot valve block assembly (**10**) onto the body withthe nuts (**21**). Tighten these nuts to the torque shown in Table 1.

17. Refit 6 mm stainless steel pipework and retighten the union nuts to ensure a steam tight seal.

18. Bring the valve back into commission by following as many steps as are necessary in Section 4.1, 'Start-up'.

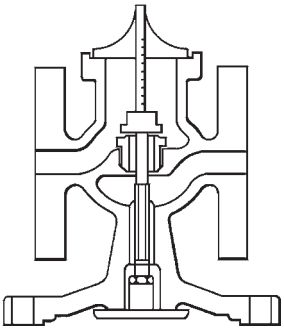

Fig. 11

Table 3

Size of valve	Lift
DN15, DN15LC	2.0 mm
DN20	2.5 mm
DN25	3.0 mm
DN32	3.5 mm
DN40	4.5 mm
DN50	5.0 mm
DN80	8.0 mm

SHOPVALVES
GLOBAL VALVE SOLUTIONS | 阀门易购

SHOPVALVES
GLOBAL VALVE SOLUTIONS | 阀门易购

6. Spare parts

6.1 Interchangeability of spares

For identification of available spares see pages 24 and 25.

The following Table shows how some parts are interchangeable. For example the line headed main diaphragm indicates that the diaphragm used in sizes DN15LC, DN15 and DN20 is common to those sizes by the letter 'a'. The letter 'b' indicates that sizes DN25 and DN32 use on common diaphragm.

† Spare parts for the DP143 and DP163 are different materials and may not be compatible for interchangeability.

		Valve size							
		DN15LC	DN15	DN20	DN25	DN32	DN40	DN50	DN80
Main diaphragm		a	a	a	b	b	c	c	d
Pilot diaphragm		a	a	a	a	a	a	a	a
Pilot valve seal assembly		a	a	a	a	a	a	a	a
Pilot valve and plunger assembly		a	a	a	a	a	a	a	a
Main valve assembly		a	b	c	d	e	f	g	h
Main valve return spring		a	a	a	b	b	c	c	d
Pressure adjustment spring		a	a	a	a	a	a	a	a
Control pipe assembly	†	a	a	b	c	d	e	f	g
Balance pipe assembly	†	a	a	b	c	d	e	f	g
Body gasket	†	a	a	a	b	b	c	c	d
Set of spring housing securing studs and nuts	†	a	a	a	a	a	a	a	a
Set of pilot valve housing securing studs and nuts	†	a	a	a	b	b	c	c	d
Set of diaphragm chamber securing bolts and nuts	†	a	a	a	b	b	c	c	d
Set of main body studs and nuts	†	—	—	—	—	—	—	—	a

SHOPVALVES
GLOBAL VALVE SOLUTIONS | 阀门易购

SHOPVALVES
GLOBAL VALVE SOLUTIONS | 阀门易购

6.2 Spare parts

The spare parts available are shown in heavy outline. Parts shown in a grey line are not supplied as spares.

Available spares

Main diaphragm (2 off) *				**A**
Pilot diaphragm (2 off) *				**B**
Pilot valve seal assembly				**C**
Pilot valve and plunger assembly *				**D, E**
Main valve assembly				**F, H**
Main valve return spring *				**G**
Pressure adjustment spring Choice of spring to suit reduced pressure	Red		0.2 to 17 bar	**J**
	Grey	DP143	16.0 to 24 bar	
		DP163	16.0 to 21 bar	
	Yellow	DP163Y	0.2 to 3 bar	
Control pipe assembly *				**K**
Balance pipe assembly				**M, N**
Body gasket (packet of 3) *				**O**
Set of spring housing securing studs and nuts (set of 4)				**P**
Set of pilot valve housing securing studs and nuts (set of 4)				**Q**
Set of diaphragm chamber securing bolts and nuts	DN15 and DN20		set of 10	**R**
	DN25 and DN32		set of 12	
	DN40 and DN50		set of 16	
	DN80		set of 20	
Set of main body studs. Nuts (DN80) (set of 6)				**T**
Push rod and main diaphragm plate assembly				**V**

Maintenance kit: *
A stand-by set of spares for general maintenance purposes and covers all spares marked (*)

How to order spares

Always order spare parts by using the description given in the column headed 'Available spares' and state the size, model number and pressure rating of the valve.

Example: 1 off Maintenance kit for a DN15 DP143 pilot operating pressure reducing valve having a pressure rating of 2 bar.

SHOPVALVES
GLOBAL VALVE SOLUTIONS | 阀门易购

SHOPVALVES
GLOBAL VALVE SOLUTIONS | 阀门易购

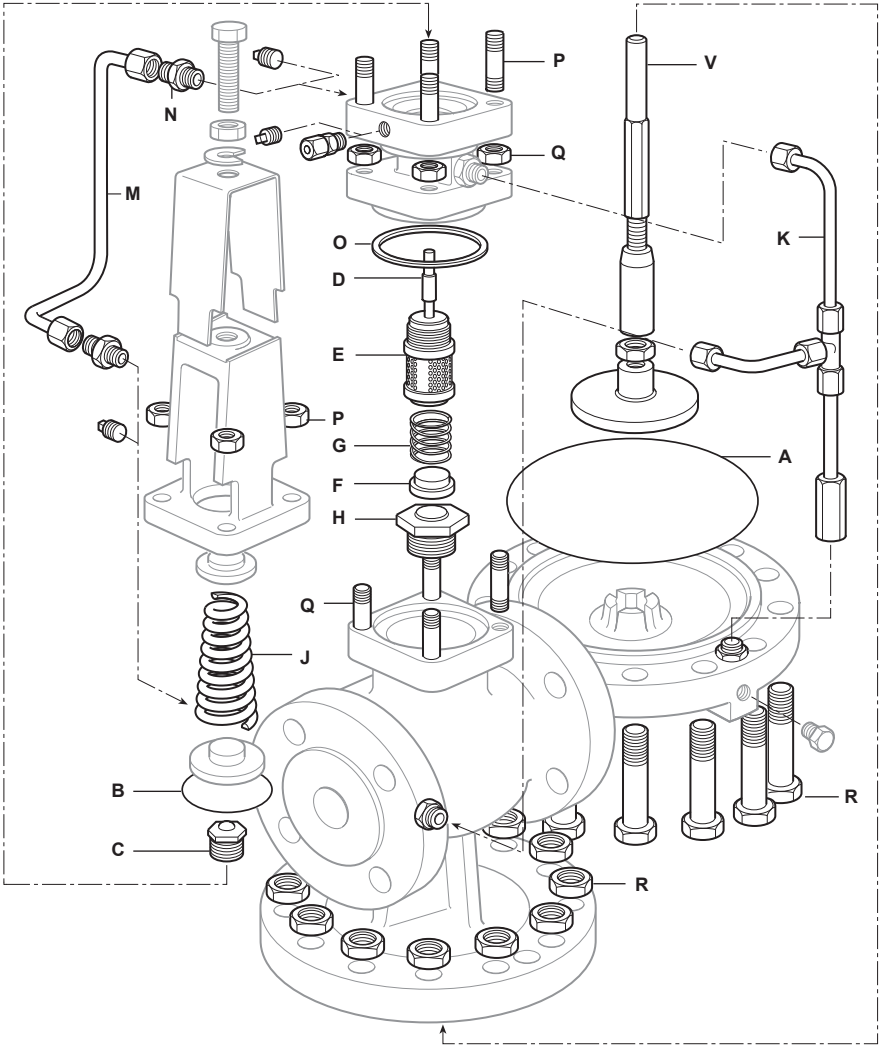

For interchangeability of spares, see page 23

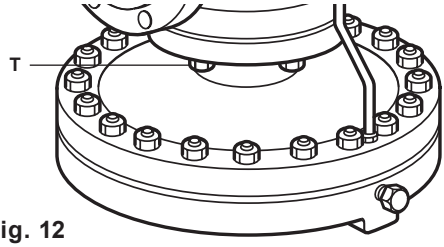

Fig. 12

SHOPVALVES
GLOBAL VALVE SOLUTIONS | 阀门易购

SHOPVALVES
GLOBAL VALVE SOLUTIONS | 阀门易购

7. Fault finding

7.1 Preliminary check

Before undertaking the following trouble tracing procedure, ensure the valve has been isolated and that upstream and downstream pressures are zero. Possible fault checks are given in a logical order below.

7.2 Downstream pressure zero or too low

If downstream pressure drops below set pressure or is zero, check the following:

1. No high pressure steam reaching the reducing valve. Check that the steam is turned on and that the strainer is clear. (To assist with commissioning and fault finding it is recommended to fit an upstream pressure gauge).
2. Pressure adjustment spring broken.
3. Pipe assembly blocked. Remove by uncoupling the union nuts and blow through to clear obstruction.
4. Control orifice blocked. Unscrew from the outlet port and clear out obstruction. For identification this coupling has a groove around the hex.
5. Main diaphragms fractured. Replace diaphragms following Section 5.8.
6. Pilot valve plunger too short. Check as Section 5.5, step 13.
7. Valve capacity insufficient for downstream conditions.

   a) Check that the upstream pressure is correct. If it is low, the capacity of the valve will be reduced.

   b) Ensure that the balance pipe is fitted as recommended in Section 3.8 and if necessary fit an external pressure sensing pipe as described. If the downstream pressure is still too low, then a larger valve with more capacity is required.

7.3 Downstream pressure too high

If the pressure on the downstream side of the reducing valve has risen above the required set pressure check the following:

1. External pressure sensing pipe blocked. Dismantle and blow through.
2. Control orifice blocked. Unscrew the pipework from the side of the body and clean it out. For identification this coupling has a groove around the hex.
3. Pilot valve diaphragms fractured. Check and replace (see Section 5.7).
4. Pilot valve or pilot valve plunger is sticking. Follow steps in Section 5.5.
5. Main valve not seating. Follow Section 5.8.
6. Main valve pushrod sticking. Follow Section 5.9, steps 9 to 13.
7. Pilot valve plunger too long. Check as Section 5.5, step 13.
8. Pilot valve not seating. Follow steps in Section 5.5.

SHOPVALVES
GLOBAL VALVE SOLUTIONS | 阀门易购

SHOPVALVES
GLOBAL VALVE SOLUTIONS | 阀门易购

7.4 Hunting

Hunting may coincide with variations in steam load. If this is the case, the following checks should be made before dismantling the valve:

1. Check that the upstream pressure is stable. If the pressure drops during full-load conditions, it is possible that there is a partial blockage upstream, or that the upstream pipework is undersized. If the upstream pressure is low, the effect will be to reduce the capacity of the valve with the possibility of not maintaining the downstream pressure during full-load conditions.
2. If the upstream pressure is correct, and stable, set the valve on dead-end conditions. Apply full-load to the valve. If the downstream pressure drops excessively during full-load condition, it is likely that the valve is undersized, in which case it should be replaced.
   Once it has been determined that the upstream pressure is correct and stable, and that the valve is correctly sized, the following check should be carried out on the valve:
3. Steam is very wet. Ensure the valve installation is as recommended in Figure 2.
4. The point at which the external pressure sensing pipe is tapped into the main is in a turbulent area. Refer to Section 2.8 for guidance.
5. Loose dirt in the pipe assembly. Remove the pipe assembly and blow it through to clear it.
6. Pilot valve or pilot valve plunger is sticking. Follow steps in Section 5.5.
7. Main valve pushrod sticking. Follow steps in Section 5.9.
8. Pilot diaphragms or main diaphragms overstretched. To replace, see Sections 5.7 and 5.8.

SHOPVALVES
GLOBAL VALVE SOLUTIONS | 阀门易购

SHOPVALVES
GLOBAL VALVE SOLUTIONS | 阀门易购

SHOPVALVES
GLOBAL VALVE SOLUTIONS | 阀门易购