Local regulations may restrict the use of this product to below the conditions quoted.
In the interests of development and improvement of the product, we reserve the right to change the specification without notice. © Copyright 2021

SHOPVALVES GLOBAL VALVE SOLUTIONS | 阀门易购

DP27, DP27E, DP27G, DP27GY, DP27R & DP27Y Pilot Operated Pressure Reducing Valves with SG Iron Bodies

Description

DP27, DP27E, DP27G, DP27GY, DP27R and DP27Y pilot operated pressure reducing valves have bodies manufactured using SG iron. These products are not suitable for oxygen service.

Available types	**DP27**	Suitable for steam or compressed air applications.
	DP27E	Suitable for steam applications. It incorporates an electrical solenoid valve in the pipe assembly allowing remote closure by means of a switching or timer device.
	DP27G	Suitable for compressed air and inert industrial gas applications. Its design incorporates a nitrile soft seal pilot and main valve. **Note: it is not available with a solenoid valve.**
	DP27GY	Suitable for compressed air, inert industrial gas and critical low pressure control applications. Its design incorporates a nitrile soft seal pilot and main valve, and uses a lower rate control spring with a downstream pressure range of 0.2 - 3.0 bar. **Note: it is not available with a solenoid valve.**
	DP27R	This can be remotely adjusted by varying a pressure signal to the pilot diaphragm. This is usually achieved using a Spirax-Monnier pressure regulator and an instrument air supply.
	DP27Y	Suitable for steriliser or critical low pressure control applications. It uses a lower rate control spring with a downstream pressure range of 0.2 - 3.0 bar.

Standards

This product fully complies with the requirements of the EU Pressure Equipment Directive/ UK Pressure Equipment (Safety) Regulations and carries the CE mark when so required.

Certification

This product is available with a manufacturer's Typical Test Report.
Note: All certification/inspection requirements must be stated at the time of order placement.

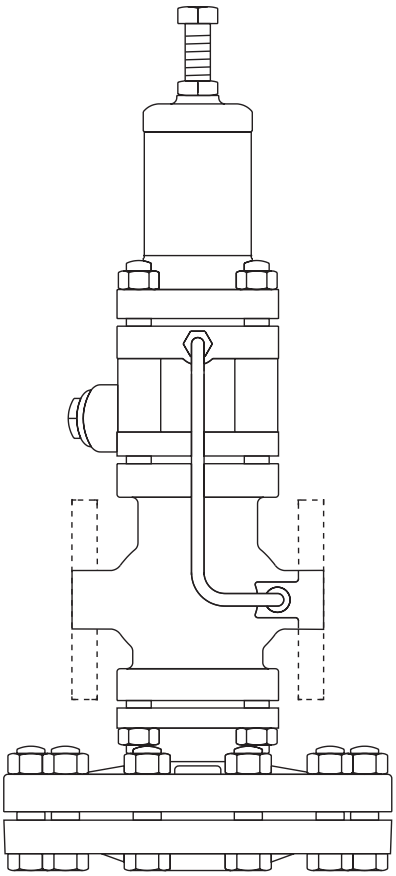

DP27 shown

Sizes and pipe connections

DN15LC - Low Capacity version (not available for DP27G or DP27GY)

DN15, DN20, DN25, DN32, DN40 and DN50

Screwed

BSP (BS 21 parallel) or NPT (DN15 to DN25 only)

Standard flanges:

DN15 - DN50 EN 1092 PN16 and PN25

DN25 - DN50 BS 10 Table H and ASME 300

Flanges available on request:

DN15 - DN15 to DN40 JIS 10/16

- DN50 JIS10 and JIS16

- DN15 to 50 ASME 150

DN15 - DN20 BS 10 Table F

DN15 - ASME 300

SHOPVALVES GLOBAL VALVE SOLUTIONS | 阀门易购

SHOPVALVES
GLOBAL VALVE SOLUTIONS | 阀门易购

Pressure/temperature limits

DP27, DP27E, DP27R and DP27Y

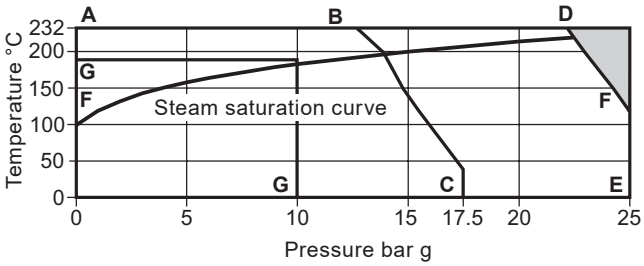

DP27G and DP27GY

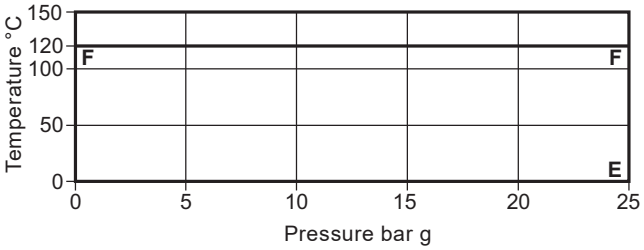

The product **must not** be used in this region.

A-D-E Screwed and flanged EN 1092 PN25, ASME 300 and BS 10 Table H.

A-B-C Flanged ASME 150.

F-F-E The DP27G and DP27GY are limited to 120 °C.

G-G The DP27E is limited to 10 bar g @ 190 °C.

Note: A variable rate conical pressure adjustment spring is fitted providing a downstream pressure range of 0.2 - 17 bar g. For the DP27Y downstream pressure range is 0.2 - 3 bar g.

Body design conditions		PN25
Maximum design pressure	**A-D-E**	25 bar g @ 120 °C
	A-B-C	17.2 bar g @ 40 °C
Maximum design temperature		232 °C @ 21 bar g
Minimum design temperature		-10 °C
Maximum upstream pressure for saturated steam service For ASME 150, see A-B-C above	**DP27, DP27R and DP27Y**	17 bar g
	DP27E	10 bar g
Maximum upstream pressure for compressed air and inert industrial gas service	**DP27G and DP27GY**	25 bar g
Maximum operating temperature For ASME 150, see A-B-C above	**DP27, DP27Y**	232 °C @ 21 bar g
	DP27E	190 °C @ 10 bar g
	DP27G, DP27GY	120 °C @ 25 bar g
Minimum operating temperature **Note:** For lower operating temperatures consult Spirax Sarco		0 °C
Maximum differential pressure	**DP27, DP27R and DP27Y**	17 bar
	DP27G and DP27GY	25 bar g
	DP27E	10 bar
Designed for a maximum cold hydraulic test pressure of:		38 bar g
Note: With internals fitted, test pressure must not exceed:		25 bar g

SHOPVALVES
GLOBAL VALVE SOLUTIONS | 阀门易购

SHOPVALVES
GLOBAL VALVE SOLUTIONS | 阀门易购

Materials - DP27 and DP27Y (Parts 1 to 14)

No.	Part		Material	
1	Adjustment screw		Steel	BS 3692 Gr. 8.8
2	Adjustment lock-nut		Steel	BS 3692 Gr. 8
3	Spring housing		SG iron	DIN1693 GGG 40.3
4	Top spring plate		Stainless steel	ASTM A351/A351M CF8M
5	Pressure adjustment spring		Stainless steel	BS EN 10270-3:2001 302 S 26
6	Bottom spring plate		Hot brass stamping	BS EN 12165 CW617N
7	Spring housing	Securing nuts	Steel	BS 3692 Gr. 8
		Securing studs	Steel	BS 4439 Gr. 8.8
			DN15 to DN32	M10 x 95 mm
			DN40 and DN50	M12 x 95 mm
8	Pilot diaphragms		Phosphor bronze	BS 2870 PB102 1980
9	Pilot valve chamber		SG iron	EN JS 1025

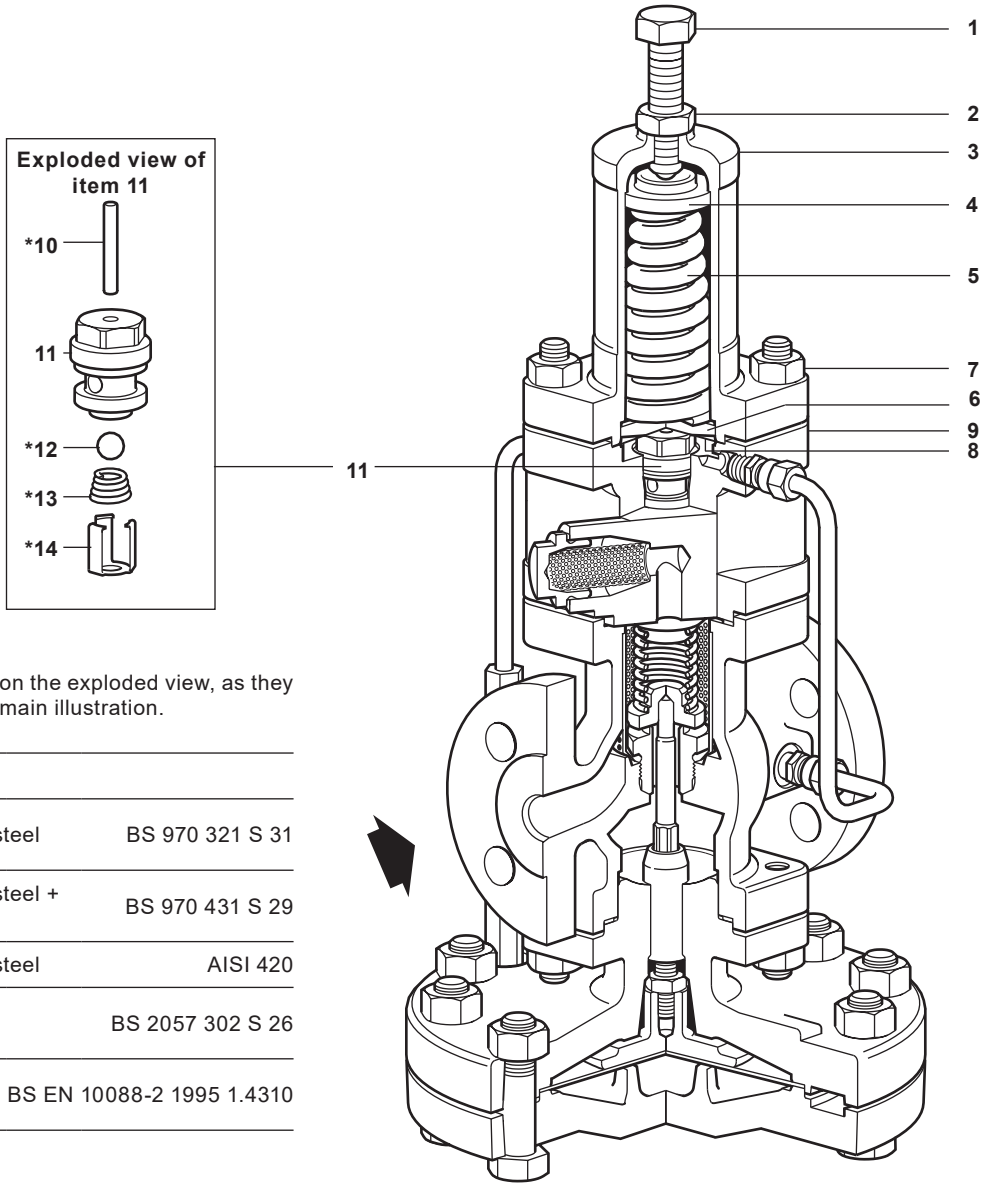

*** Note:**
Items **10, 12, 13** and **14** are shown on the exploded view, as they are hidden by the pilot filter on the main illustration.

No.	Part	Material	
10 *	Pilot valve plunger	Stainless steel	BS 970 321 S 31
11	Pilot valve seat with integral seal	Stainless steel + PTFE	BS 970 431 S 29
12 *	Pilot valve ball	Stainless steel	AISI 420
13 *	Pilot valve spring	Stainless steel	BS 2057 302 S 26
14 *	Pilot valve clip	Stainless steel	BS EN 10088-2 1995 1.4310

SHOPVALVES
GLOBAL VALVE SOLUTIONS | 阀门易购

SHOPVALVES
GLOBAL VALVE SOLUTIONS | 阀门易购

Materials - DP27 and DP27Y (Parts 15 to 25)

No.	Part	Material	
15	Pilot filter cap gasket	Stainless steel	BS 1449 316 S 11
16	Pilot filter cap	Stainless steel	BS 970 431 S 29
17	Pilot filter element	Brass	
18	Internal strainer	Stainless steel	ASTM A240 TP 304
19	Body gasket	Stainless steel reinforced exfoliated graphite	
20	Main valve return spring	Stainless steel	BS 2056 302 S 26
21	Main valve	Stainless steel	BS 970 431 S 29
22	Main valve seat	Stainless steel	BS 970 431 S 29
23	Balance pipe assembly	Copper	BS 2871 C 106 ½H
24	Main valve body	SG iron	DIN 1693 GGG 40.3

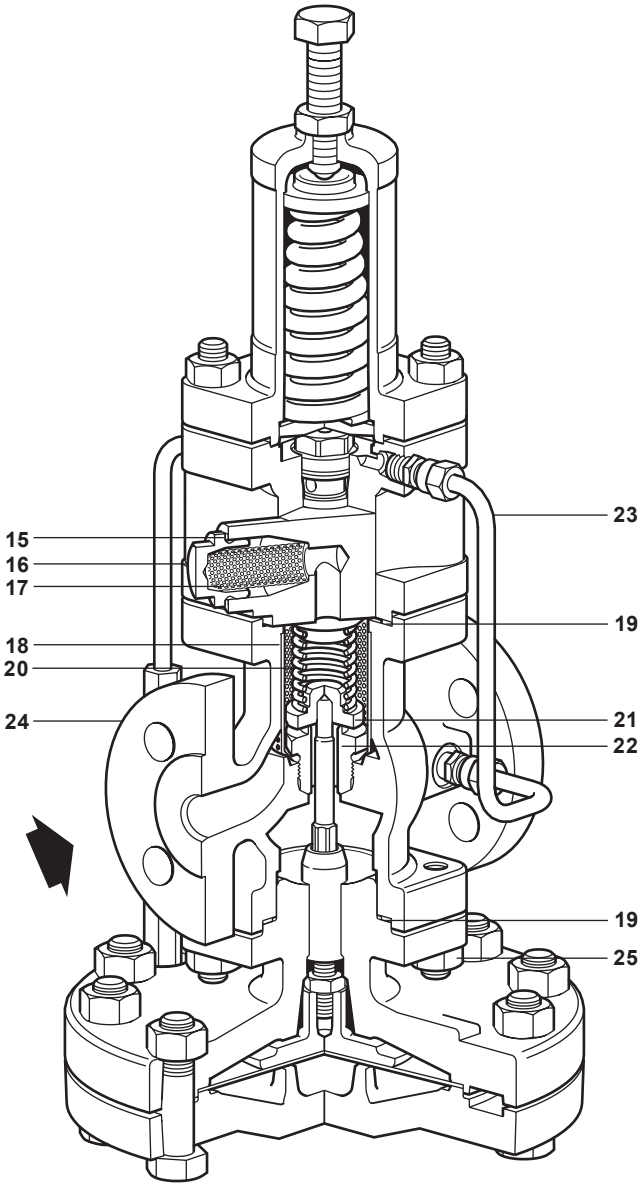

No.	Part		Material	
25	Main body	Securing nuts	Steel	BS 3692 Gr. 8
		Securing studs	Steel	BS 4439 Gr. 8.8
			DN15 to DN32	M10 x 25 mm
			DN40 and DN50	M12 x 30 mm

SHOPVALVES
GLOBAL VALVE SOLUTIONS | 阀门易购

SHOPVALVES
GLOBAL VALVE SOLUTIONS | 阀门易购

Materials - DP27 and DP27Y (Parts 26 to 34)

No.	Part		Material	
26	Main diaphragm chamber - upper		SG iron	DIN 1693 GGG 40.3
27	Main diaphragm chamber - lower		SG iron	DIN 1693 GGG 40.3
28	Main diaphragm	Securing nuts	Steel	BS 3692 Gr. 8
		Securing bolts	Steel	BS 3692 Gr. 8.8
			DN15 to DN32	M12 x 50 mm
			DN40 and DN50	M12 x 55 mm
29	Main diaphragms		Phosphor bronze	BS 2870 PB 102 1980
30	Main diaphragm plate		Hot brass stamping	BS EN 12165 CW617N
31	Pushrod		Stainless steel	BS 970 431 S 29
32	Lock-nut		Steel	BS 3692 Gr. 8
33	Control pipe assembly		Brass and copper	
34	Plug ⅛"	BSP	Steel	**Note:** This item is hidden from view

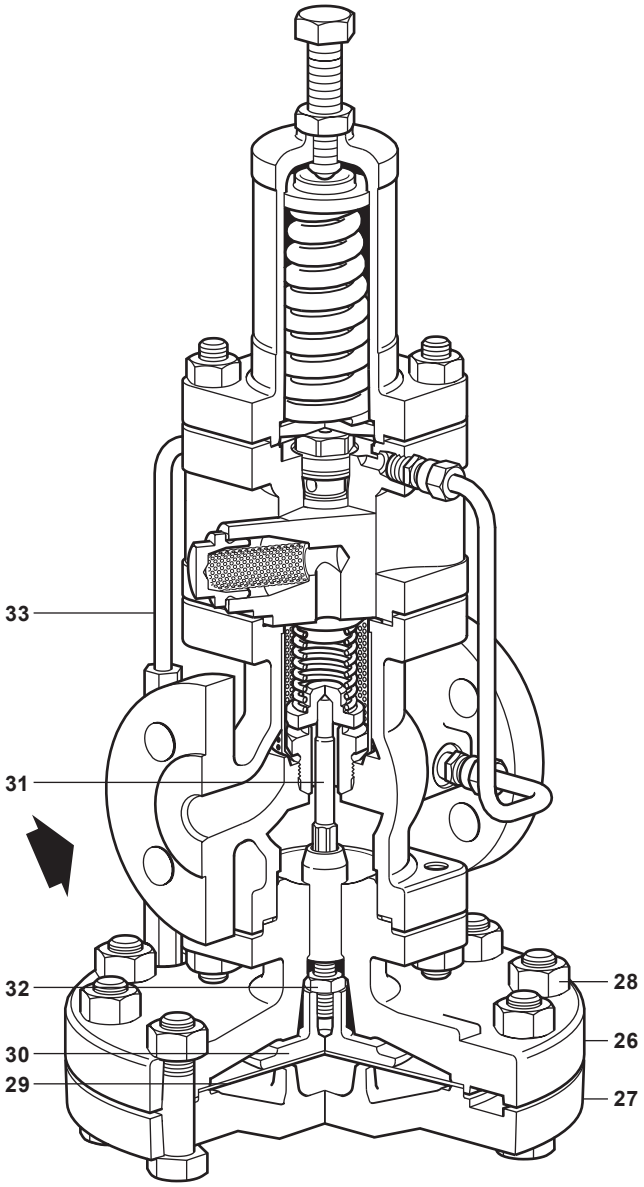

SHOPVALVES
GLOBAL VALVE SOLUTIONS | 阀门易购

SHOPVALVES
GLOBAL VALVE SOLUTIONS | 阀门易购

Materials - DP27E

See DP27 items list on pages 3 to 5 for common components

No.	Part	Material	
43	Pilot valve assembly with integral seal		
44	Pipe assembly	Brass and copper	
45	Circlip	Stainless steel	1.4116
46	Retainer	Stainless steel	BS 970 431 S 29
47	Variseal	Composite elastomer/stainless steel	Turcon T40/AQISI 302
48	Pilot seat	Stainless steel + PTFE	BS 970 431 S 29
49	Solenoid assembly		

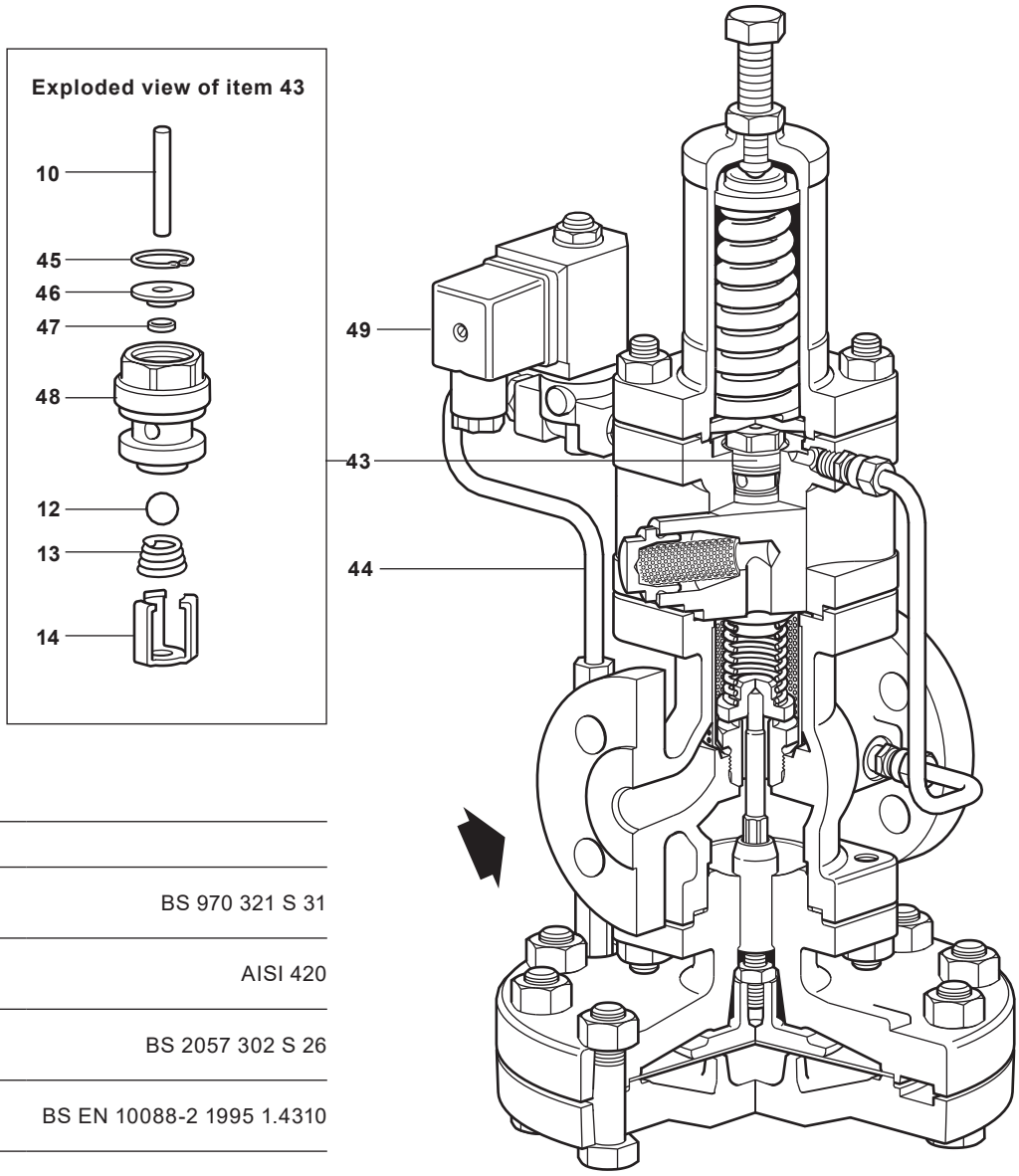

No.	Part	Material	
10 *	Pilot valve plunger	Stainless steel	BS 970 321 S 31
12 *	Pilot valve ball	Stainless steel	AISI 420
13 *	Pilot valve spring	Stainless steel	BS 2057 302 S 26
14 *	Pilot valve clip	Stainless steel	BS EN 10088-2 1995 1.4310

SHOPVALVES
GLOBAL VALVE SOLUTIONS | 阀门易购

SHOPVALVES
GLOBAL VALVE SOLUTIONS | 阀门易购

Materials - DP27G and DP27GY

See DP27 items list on pages 3 to 5 for common components

No.	Part	Material	
35	Pilot valve chamber	SG iron	DIN 1693 GGG 40.3
36	Pilot valve assembly	Brass/PTFE/Nitrile	
37	Main valve assembly	Stainless steel/Nitrile	BS 970 431 S29

DP27G

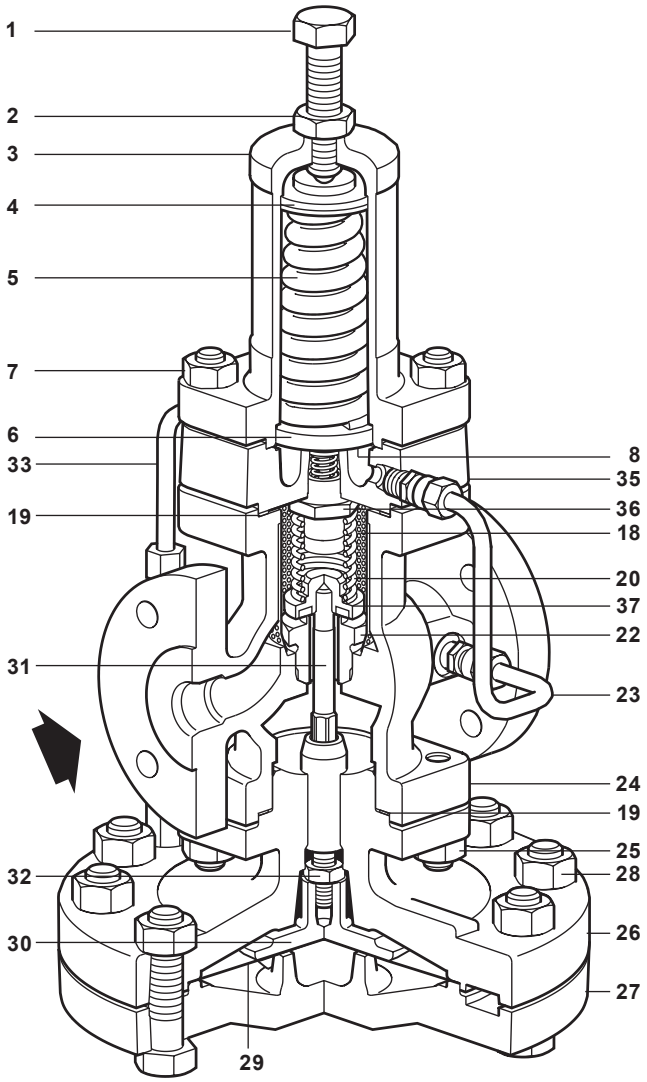

DP27R

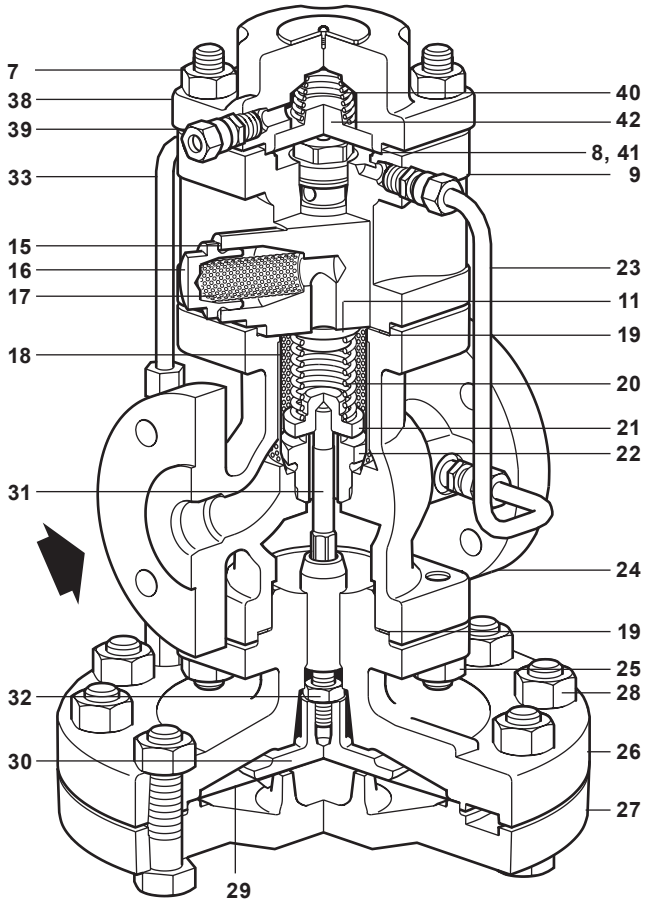

Materials - DP27R

See DP27 items list on pages 3 to 5 for common components

No.	Part	Material	
38	Actuating chamber cover	SG iron	DIN 1693 GGG 40.3
39	Actuating air supply union	Brass	
40	Diaphragm spring	Stainless steel	BS 2056 Gr. 302 S26
41	Actuating chamber gasket	Stainless steel reinforced exfoliated graphite	BS 2815 Gr. A
42	Spring plate	Hot brass stamping	BS EN 12165 CW617N

SHOPVALVES
GLOBAL VALVE SOLUTIONS | 阀门易购

SHOPVALVES
GLOBAL VALVE SOLUTIONS | 阀门易购

Technical data (Solenoid valve)

Voltages available	220/240 ±10% Vac or 110/220 ±10% Vac (others available on request)
Frequency	50/60 Hz
Power consumption	**Inrush** 45 VA
	Holding 23 VA

K_v values

The K_v maximum values shown below are full capacities and should be used for safety valve sizing purposes only.

DN15LC	DN15	DN20	DN25	DN32	DN40	DN50
1.0	2.8	5.5	8.1	12.0	17.0	28.0

For conversion:
C_v (UK) = K_v x 0.963
C_v (US) = K_v x 1.156

Note: Where the internal balance pipe is used the valve capacity will be reduced.

Dimensions/weights (approximate) in mm and kg

DP27, DP27E and DP27Y

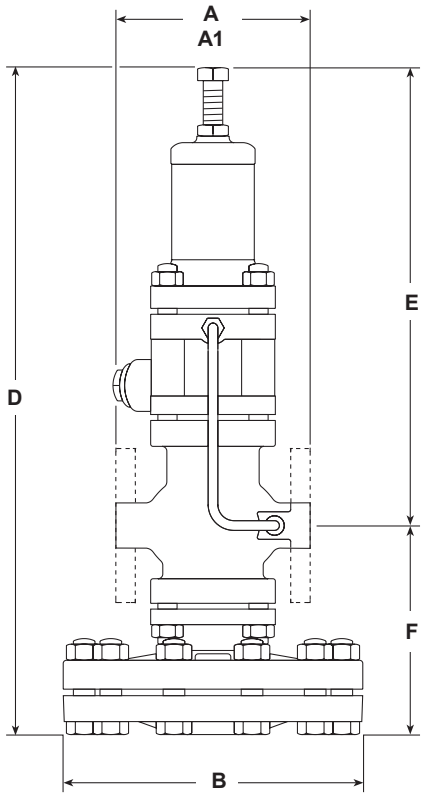

	Screwed	Flanged										Weight	
		BS 10 H	PN16/25	ASME 300	BS 10 F	ASME 150	JIS 10/16						
Size	**A**	**A1**	**A1**	**A1**	**A1**	**A1**	**A1**	**B**	**D**	**E**	**F**	**Screwed**	**Flanged**
DN15LC	160	-	130	126.6	117	120.2	122	185	406	276	130	13.2	14.0
DN15	160	-	130	126.6	117	120.2	122	185	406	276	130	13.2	14.0
DN20	160	-	150	-	133	139.4	142	185	406	276	130	13.2	14.9
DN25	180	160	160	160.0	-	160.0	152	207	430	282	148	14.2	17.2
DN32	-	180	180	180.0	-	176.0	176	207	430	282	148	-	18.2
DN40	-	200	200	200.0	-	199.0	196	255	475	297	178	-	30.2
DN50	-	230	230	230.0	-	228.0	222	255	475	297	178	-	32.2

SHOPVALVES
GLOBAL VALVE SOLUTIONS | 阀门易购

SHOPVALVES
GLOBAL VALVE SOLUTIONS | 阀门易购

Dimensions/weights (approximate) in mm and kg

DP27G and DP27GY

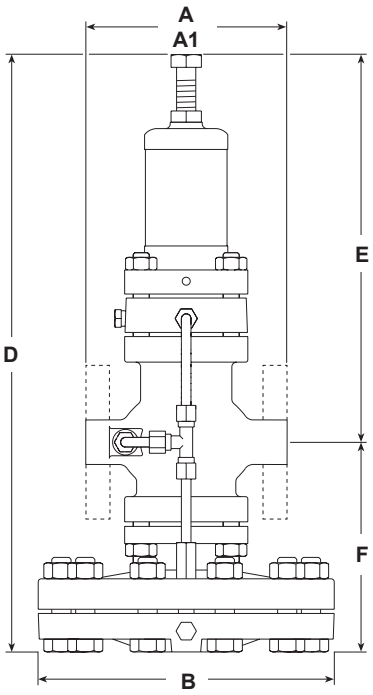

DP27R

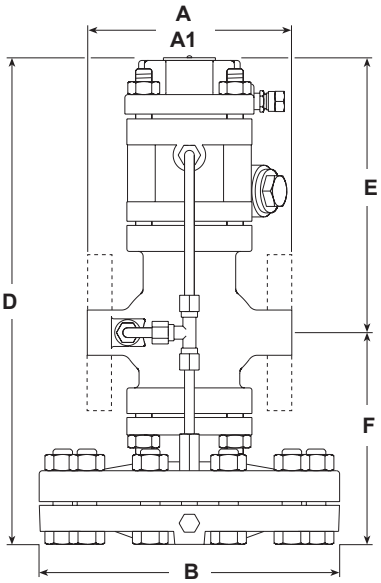

DP27G and DP27GY

	Screwed	Flanged										Weight	
		BS 10 H	PN16/25	ASME 300	BS 10 F	ASME 150	JIS 10/16						
Size	A	A1	A1	A1	A1	A1	A1	B	D	E	F	Screwed	Flanged
DN15	160	-	130	126.6	117	120.2	122	185	364	234	130	12.0	12.8
DN20	160	-	150	-	133	139.4	142	185	364	234	130	12.0	13.7
DN25	180	160	160	160.0	-	160.0	152	207	388	240	148	13.0	16.0
DN32	-	180	180	180.0	-	176.0	176	207	388	240	148	-	17.0
DN40	-	200	200	200.0	-	199.0	196	255	433	255	178	-	29.0
DN50	-	230	230	230.0	-	228.0	222	255	433	255	178	-	31.5

DP27R

	Screwed	Flanged										Weight	
		BS 10 H	PN16/25	ASME 300	BS 10 F	ASME 150	JIS 10/16						
Size	A	A1	A1	A1	A1	A1	A1	B	D	E	F	Screwed	Flanged
DN15LC	160	-	130	126.6	117	120.2	122	185	296	166	130	12.2	13.0
DN15	160	-	130	126.6	117	120.2	122	185	296	166	130	12.2	13.0
DN20	160	-	150	-	133	139.4	142	185	296	166	130	12.2	13.9
DN25	180	160	160	160.0	-	160.0	152	207	320	172	148	13.2	16.2
DN32	-	180	180	180.0	-	176.0	176	207	320	172	148	-	16.2
DN40	-	200	200	200.0	-	199.0	196	255	364	186	178	-	29.2
DN50	-	230	230	230.0	-	228.0	222	255	364	186	178	-	31.7

SHOPVALVES
GLOBAL VALVE SOLUTIONS | 阀门易购

SHOPVALVES
GLOBAL VALVE SOLUTIONS | 阀门易购

Steam capacities chart

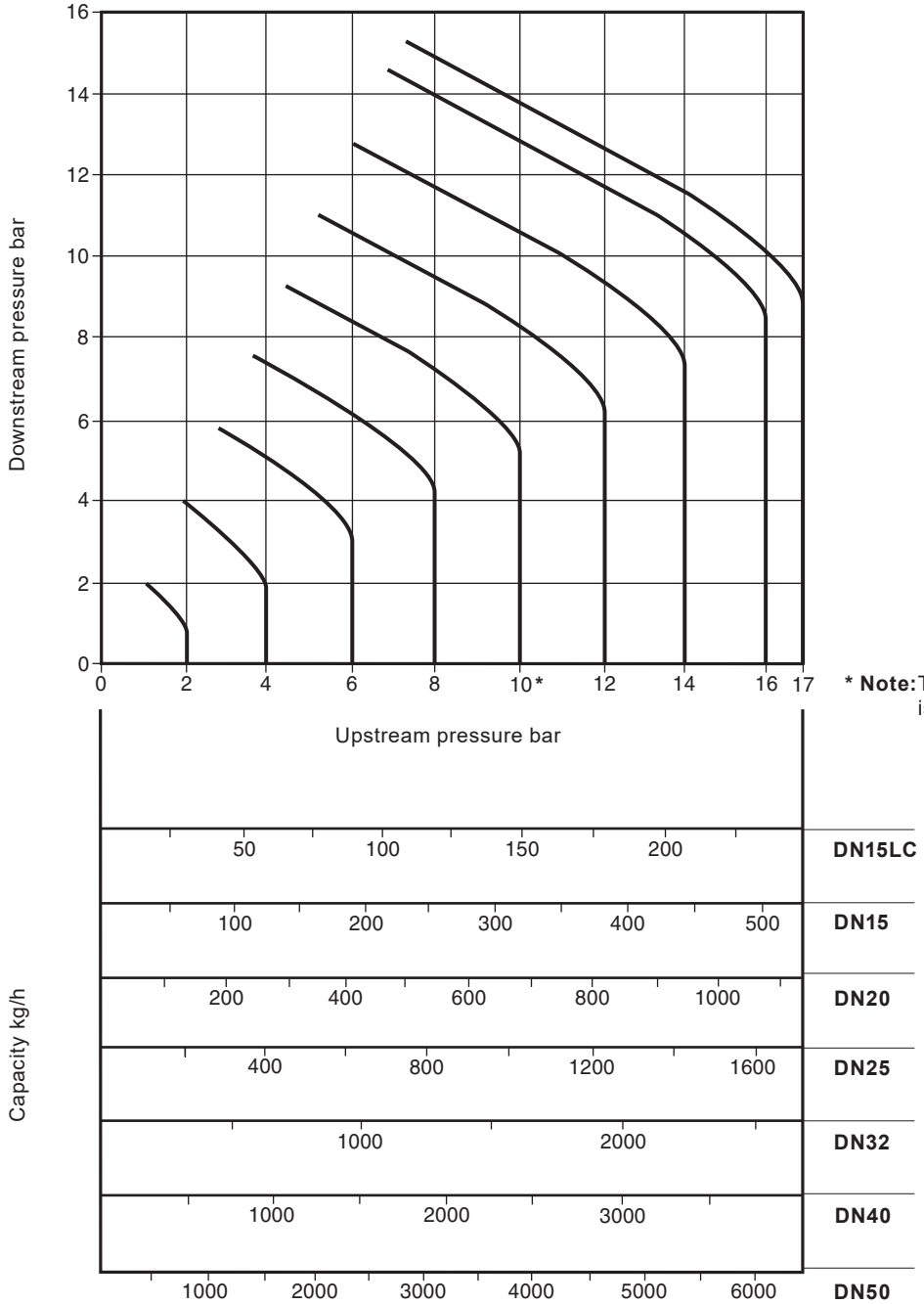

*** Note:** The DP27E is limited to 10 bar.

Note

The capacities quoted above are based on valves fitted with an external pressure sensing pipe. Reliance on the internal pressure sensing pipe will mean that capacities may be reduced. In the case of low downstream pressure this reduction could be up to 30% of the valve capacity.

How to use the chart

Saturated steam

A valve is required to pass 600 kg/h reducing from 6 bar to 4 bar. Find the point at which the curved 6 bar upstream pressure line crosses the horizontal 4 bar downstream pressure line. A perpendicular dropped from this point gives the capacities of all DP sizes under these conditions. A DN32 valve, is the smallest size which will carry the required load.

Superheated steam

Because of the higher specific volume of superheated steam a correction factor must be applied to the figure obtained from the chart above. For 55 °C of superheat the factor is 0.95 and for 100 °C of superheat the factor is 0.9.
Using the example given for saturated steam, the DN32 valve would pass 740 x 0.95 = 703 kg/h if the steam had 55 °C of superheat. It is still big enough to pass the required load of 600 kg/h.

SHOPVALVES
GLOBAL VALVE SOLUTIONS | 阀门易购

SHOPVALVES
GLOBAL VALVE SOLUTIONS | 阀门易购

Compressed air capacities chart

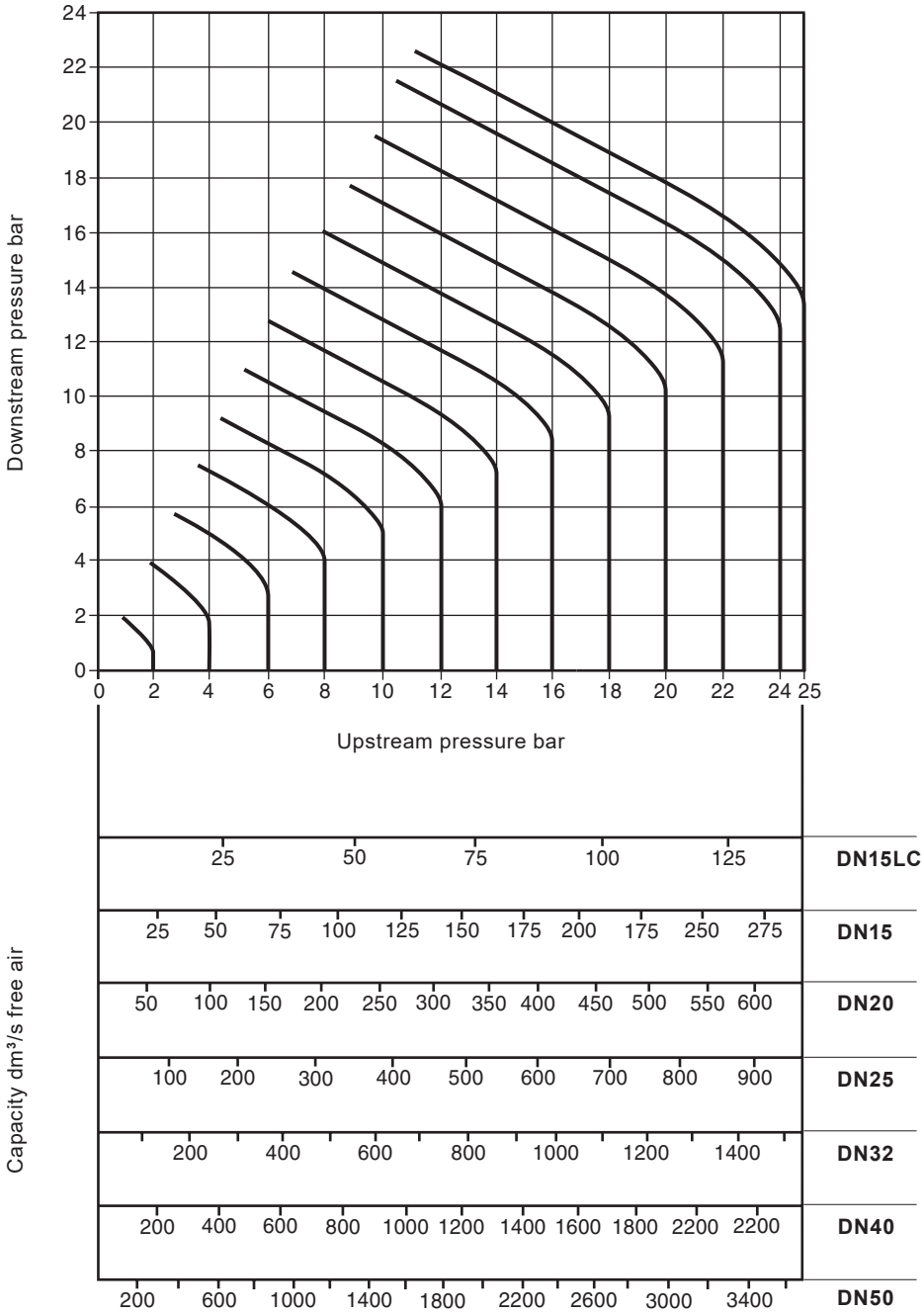

How to use the chart

Capacities are given in cubic decimetres of free air per second (dm^3/s). The use of the capacity chart can be best explained by an example. Required, a valve to pass 100 dm^3/s of free air reducing from 12 bar to 8 bar.
Find the point at which the curved 12 bar upstream pressure line crosses the horizontal 8 bar downstream pressure line. A perpendicular dropped from this point shows that whereas a DN15LC valve will only pass 57 dm^3/s and is therefore not large enough, a DN15 valve will pass approximately 120 dm^3/s under these conditions and is the correct valve size to choose.

Safety information, installation and maintenance

For full details see the Installation and Maintenance Instructions (IM-P100-05 for the DP27G and DP27GY, or IM-P470-03 for the DP27E, DP27R and DP27Y) supplied with the product.

Installation note:
The pilot operated pressure reducing valve should be installed in a horizontal pipeline, protected by a strainer and a separator, with the direction of flow as indicated by the arrow on the valve body.

How to order example:

1 off Spirax Sarco DN32 DP27 pilot operated pressure reducing valve having a 0.2 - 17 bar spring and flanged EN 1092 PN25 connections.

SHOPVALVES
GLOBAL VALVE SOLUTIONS | 阀门易购

SHOPVALVES
GLOBAL VALVE SOLUTIONS | 阀门易购

Spare parts

Available spares				
Maintenance kit A stand-by set of spares for general maintenance purposes and covers all spares marked*				
Main diaphragm *	(2 off)			**A**
Pilot diaphragm *	(2 off)			**B**
Pilot valve assembly inclusive of filter element * (Pilot valve chamber assembly for the DP27G and DP27GY)				**C**
Pilot filter element and cap gasket * (Not required for the DP27G and DP27GY)	(packet of 3 off each)			**E, F**
	DP27G and DP27GY only - PTFE seals (packet of 6)			**E**
Main valve assembly				**K, L**
Internal strainer *				**M**
Main valve return spring				**N**
Pressure adjustment spring (Not required for DP27R)	**DP27, DP27E and DP27G**		0.2 to 17 bar	**O**
	DP27Y and DP27GY		0.2 to 3 bar	
Control pipe assembly *				**P**
Balance pipe assembly *				**Q**
Body gasket (3 off) *				**R**
Pilot valve block gasket (DP27R only)				**R1**
Set of spring housing/actuating chamber cover securing studs and nuts	(set of 4)			**S**
Set of main body studs and nuts	(set of 4)			**T**
Set of diaphragm securing bolts and nuts	Valve sizes	½" - DN32	(set of 10)	**V**
		DN40 and DN50	(set of 12)	
Pushrod and main diaphragm plate assembly				**Y**
Type DP27E only				
Solenoid valve complete				**W**
Replacement coil				**X1**
Valve seat and core assembly				**X2**

How to order spares

Always order spares by using the description given in the column headed 'Available spares' and state the size and type of pressure reducing valve.

Example: 1 - Main valve assembly for a 1" Spirax Sarco Type DP27 pressure reducing valve.

How to fit. See Installation and Maintenance Instructions supplied with the pressure reducing valve. Further copies are available on request.

For 'Interchangeability of spares' go to page 14.

SHOPVALVES
GLOBAL VALVE SOLUTIONS | 阀门易购

SHOPVALVES
GLOBAL VALVE SOLUTIONS | 阀门易购

DP27, DP27G, DP27GY, DP27Y

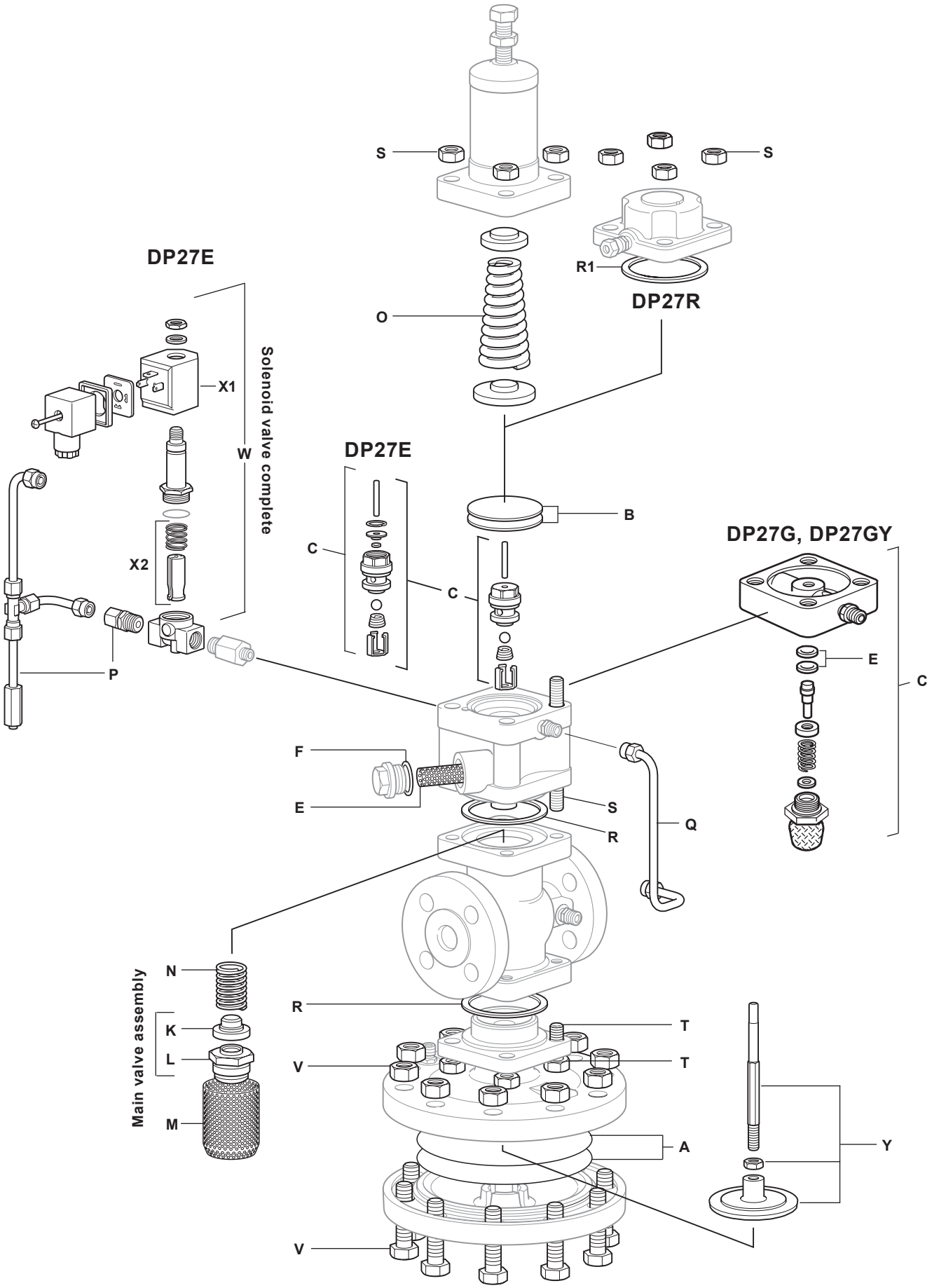

SHOPVALVES
GLOBAL VALVE SOLUTIONS | 阀门易购

SHOPVALVES
GLOBAL VALVE SOLUTIONS | 阀门易购

Interchangeability of spares

The following table shows how in certain sizes some parts are interchangeable. For example in the line headed 'Main diaphragm' the diaphragm used in the screwed valves ½" and ¾" is common to these sizes by the letter 'a', the letter 'c' indicates that one diaphragm is common to the DN40 and DN50 valves. All spares are interchangeable with the DP27T and where marked † are interchangeable with the 37D temperature control.**

** **Note**: This does not apply to the DP27G and DP27GY soft seat pilot valve or main valve assemblies.

	Screwed				Flanged						
Size DN	**½"LC**	**½"**	**¾"**	**1"**	**15LC**	**15**	**20**	**25**	**32**	**40**	**50**
Maintenance kit	a	a	a	b	f	f	a	b	c	d	e
Main diaphragm	a	a	a	b	a	a	a	b	b	c	c
Pilot diaphragms †	a	a	a	a	a	a	a	a	a	a	a
Pilot valve chamber assembly	a	a	a	a	a	a	a	a	a	b	b
Pilot filter element	a	a	a	a	a	a	a	a	a	a	a
Pilot filter cap gaskets	a	a	a	a	a	a	a	a	a	a	a
PTFE seals	a	a	a	a	a	a	a	a	a	a	a
Main valve assembly †	a	b	c	d	a	b	c	d	e	f	g
Internal strainer †	a	a	a	b	f	f	a	b	c	d	e
Main valve return spring †	a	a	a	a	a	a	a	a	a	c	c
Pressure adjustment spring	a	a	a	a	a	a	a	a	a	a	a
Control pipe assembly †	a	a	a	b	f	f	a	b	c	d	e
Balance pipe assembly	a	a	a	b	f	f	a	b	c	d	e
Body gasket †	a	a	a	a	a	a	a	a	a	b	b
Set of spring housing securing studs and nuts	a	a	a	a	a	a	a	a	a	b	b
Set of main body studs and nuts †	a	a	a	a	a	a	a	a	a	b	b
Set of diaphragm securing bolts and nuts †	a	a	a	a	a	a	a	a	a	b	b
Pushrod and main diaphragm plate assembly	a	a	a	b	a	a	a	b	b	c	c

Not available for the DP27G or the DP27GY

SHOPVALVES
GLOBAL VALVE SOLUTIONS | 阀门易购