SHOPVALVES
GLOBAL VALVE SOLUTIONS | 阀门易购

4700036/8

IM-P470-03
CTLS Issue 8

spirax sarco

DP27, DP27E, DP27R and DP27Y
Pilot Operated Pressure Reducing Valves

Installation and Maintenance Instructions

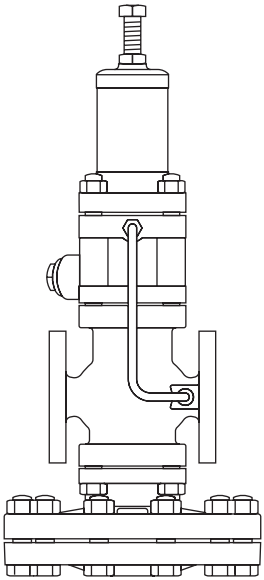

1. Safety information
2. General product information
3. Installation
4. Commissioning
5. Operation
6. Maintenance
7. Spare parts
8. Fault finding

© Copyright 2018
Printed in GB

SHOPVALVES
GLOBAL VALVE SOLUTIONS | 阀门易购

SHOPVALVES
GLOBAL VALVE SOLUTIONS | 阀门易购

SHOPVALVES
GLOBAL VALVE SOLUTIONS | 阀门易购

SHOPVALVES
GLOBAL VALVE SOLUTIONS | 阀门易购

1. Safety information

Safe operation of these products can only be guaranteed if they are properly installed, commissioned, used and maintained by qualified personnel (see Section 1.11) in compliance with the operating instructions. General installation and safety instructions for pipeline and plant construction, as well as the proper use of tools and safety equipment must also be complied with.

1.1 Intended use

Referring to the Installation and Maintenance Instructions, name-plate and Technical Information Sheet, check that the product is suitable for the intended use/application.

The products listed below comply with the requirements of the Pressure Equipment Directive (PED) and carry the CE mark when so required. The products fall within the following Pressure Equipment Directive categories:

Product		Group 2 Gases
DP27 and all derivatives	DN15 - DN40	SEP
	DN50	1

i) The products have been specifically designed for use on steam, air and inert industrial gases which are in Group 2 of the above mentioned Pressure Equipment Directive. The products' use on other fluids may be possible but, if this is contemplated, Spirax Sarco should be contacted to confirm the suitability of the product for the application being considered.

ii) Check material suitability, pressure and temperature and their maximum and minimum values. If the maximum operating limits of the product are lower than those of the system in which it is being fitted, or if malfunction of the product could result in a dangerous overpressure or overtemperature occurrence, ensure a safety device is included in the system to prevent such over-limit situations.

iii) Determine the correct installation situation and direction of fluid flow.

iv) Spirax Sarco products are not intended to withstand external stresses that may be induced by any system to which they are fitted. It is the responsibility of the installer to consider these stresses and take adequate precautions to minimise them.

v) Remove protection covers from all connections and protective film from all name-plates, where appropriate, before installation on steam or other high temperature applications.

1.2 Access

Ensure safe access and if necessary a safe working platform (suitably guarded) before attempting to work on the product. Arrange suitable lifting gear if required.

1.3 Lighting

Ensure adequate lighting, particularly where detailed or intricate work is required.

1.4 Hazardous liquids or gases in the pipeline

Consider what is in the pipeline or what may have been in the pipeline at some previous time. Consider: flammable materials, substances hazardous to health, extremes of temperature.

SHOPVALVES
GLOBAL VALVE SOLUTIONS | 阀门易购

SHOPVALVES
GLOBAL VALVE SOLUTIONS | 阀门易购

1.5 Hazardous environment around the product

Consider: explosion risk areas, lack of oxygen (e.g. tanks, pits), dangerous gases, extremes of temperature, hot surfaces, fire hazard (e.g. during welding), excessive noise, moving machinery.

1.6 The system

Consider the effect on the complete system of the work proposed. Will any proposed action (e.g. closing isolation valves, electrical isolation) put any other part of the system or any personnel at risk?
Dangers might include isolation of vents or protective devices or the rendering ineffective of controls or alarms. Ensure isolation valves are turned on and off in a gradual way to avoid system shocks.

1.7 Pressure systems

Ensure that any pressure is isolated and safely vented to atmospheric pressure. Consider double isolation (double block and bleed) and the locking or labelling of closed valves. Do not assume that the system has depressurised even when the pressure gauge indicates zero.

1.8 Temperature

Allow time for temperature to normalise after isolation to avoid danger of burns.

1.9 Tools and consumables

Before starting work ensure that you have suitable tools and/or consumables available. Use only genuine Spirax Sarco replacement parts.

1.10 Protective clothing

Consider whether you and/or others in the vicinity require any protective clothing to protect against the hazards of, for example, chemicals, high/low temperature, radiation, noise, falling objects, and dangers to eyes and face.

1.11 Permits to work

All work must be carried out or be supervised by a suitably competent person.
Installation and operating personnel should be trained in the correct use of the product according to the Installation and Maintenance Instructions.
Where a formal 'permit to work' system is in force it must be complied with. Where there is no such system, it is recommended that a responsible person should know what work is going on and, where necessary, arrange to have an assistant whose primary responsibility is safety.
Post 'warning notices' if necessary.

1.12 Handling

Manual handling of large and/or heavy products may present a risk of injury. Lifting, pushing, pulling, carrying or supporting a load by bodily force can cause injury particularly to the back. You are advised to assess the risks taking into account the task, the individual, the load and the working environment and use the appropriate handling method depending on the circumstances of the work being done.

SHOPVALVES
GLOBAL VALVE SOLUTIONS | 阀门易购

SHOPVALVES
GLOBAL VALVE SOLUTIONS | 阀门易购

1.13 Residual hazards

In normal use the external surface of the product may be very hot. If used at the maximum permitted operating conditions the surface temperature of some products may reach temperatures of 300 °C. Many products are not self-draining. Take due care when dismantling or removing the product from an installation (refer to 'Maintenance instructions').

1.14 Freezing

Provision must be made to protect products which are not self-draining against frost damage in environments where they may be exposed to temperatures below freezing point.

1.15 Disposal

Unless otherwise stated in the Installation and Maintenance Instructions, this product is recyclable and no ecological hazard is anticipated with its disposal providing due care is taken. However, if the valve has any PTFE components, special care must be taken to avoid potential health hazards associated with decomposition/burning of this material.

PTFE:

- **Can only be disposed of by approved methods, not inceration.**
- **Keep PTFE waste in a separate container, do not mix it with other rubbish, and consign it to a landfill site.**

SHOPVALVES
GLOBAL VALVE SOLUTIONS | 阀门易购

SHOPVALVES
GLOBAL VALVE SOLUTIONS | 阀门易购

2. General product information

2.1 General description

DP27, DP27E, DP27G, DP27GY, DP27R and DP27Y pilot operated pressure reducing valves have bodies manufactured using SG iron.These products are not suitable for oxygen service.

Available types	**DP27**	Suitable for steam or compressed air applications.
	DP27E	Suitable for steam applications. It incorporates an electrical solenoid valve in the pipe assembly allowing remote closure by means of a switching or timer device.
	DP27G	Suitable for compressed air and inert industrial gas applications. Its design incorporates a nitrile soft seal pilot and main valve. **Note: it is not available with a solenoid valve.**
	DP27GY	Suitable for compressed air, inert industrial gas and critical low pressure control applications. Its design incorporates a nitrile soft seal pilot and main valve, and uses a lower rate control spring with a downstream pressure range of 0.2 - 3.0 bar. **Note: it is not available with a solenoid valve.**
	DP27R	This can be remotely adjusted by varying a pressure signal to the pilot diaphragm. This is usually achieved using a Spirax-Monnier pressure regulator and an instrument air supply.
	DP27Y	Suitable for steriliser or critical low pressure control applications. It uses a lower rate control spring with a downstream pressure range of 0.2 - 3.0 bar.

Standards

This product fully complies with the requirements of the Pressure Equipment Directive (PED) and carries the CE mark when so required.

Certification

This product is available with a manufacturer's Typical Test Report.
Note: All certification/inspection requirements must be stated at the time of order placement.

2.2 Sizes and pipe connections

Screwed BSP (BS 21 parallel) or NPT (DN15, DN20 and DN25 only).
Flanged DN15LC - Low Capacity version, DN15, DN20, DN25, DN32, DN40 and DN50.

Standard flanges:	**DN15 - DN50** EN 1092 PN16 and PN25
	DN25 - DN50 BS 10 Table H and ASME 300
Flanges available on request:	**DN15 - DN50** JIS 10/16 and ASME 150
	DN15 - DN20 BS 10 Table F
	DN15 ASME 300

SHOPVALVES
GLOBAL VALVE SOLUTIONS | 阀门易购

SHOPVALVES
GLOBAL VALVE SOLUTIONS | 阀门易购

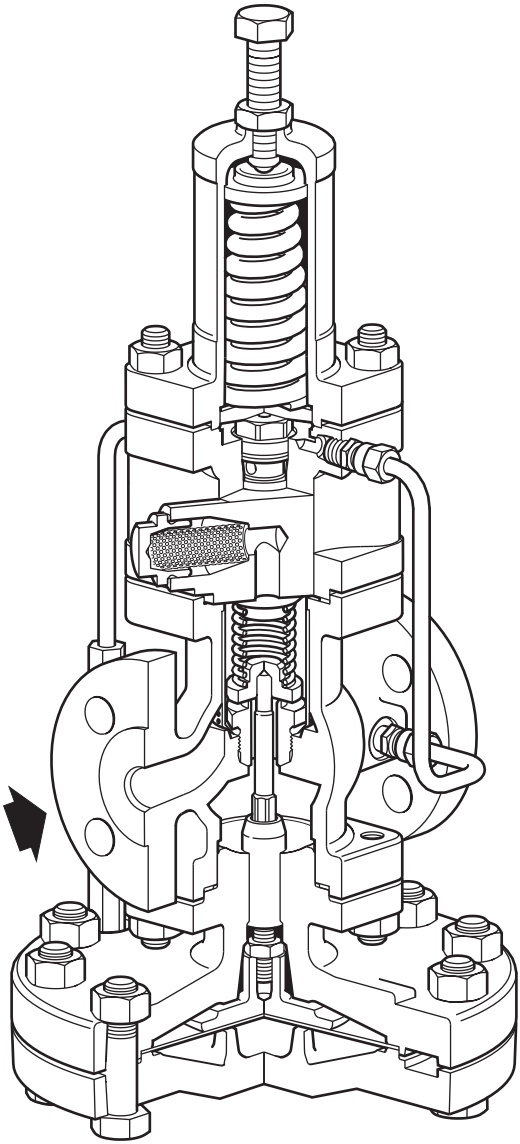

SHOPVALVES
GLOBAL VALVE SOLUTIONS | 阀门易购

SHOPVALVES
GLOBAL VALVE SOLUTIONS | 阀门易购

2.3 Pressure/temperature limits

DP27, DP27E, DP27R and DP27Y

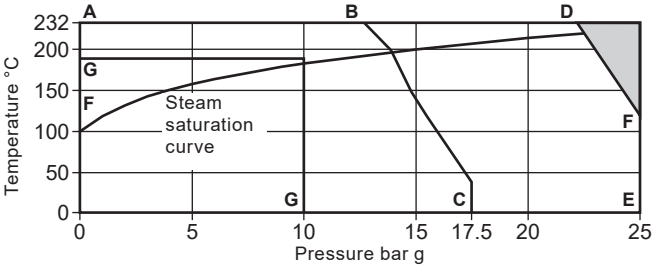

DP27E

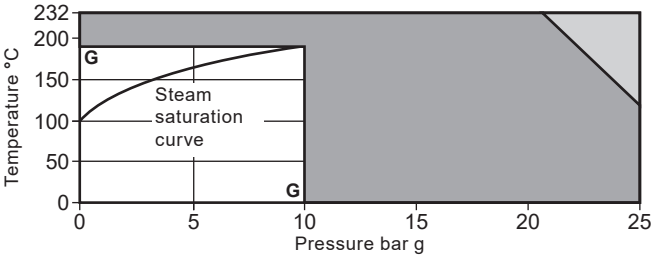

DP27G and DP27GY

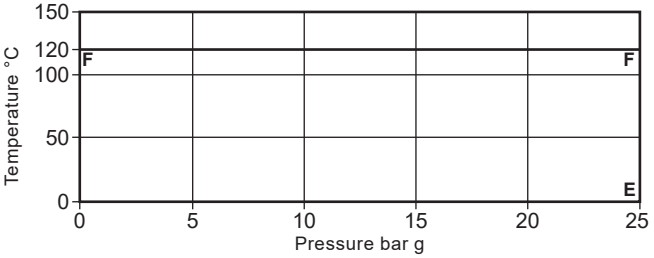

The product **must not** be used in this region.

The product should not be used in this region or beyond its operating range as damage to the internals may occur.

A-D-E Screwed and flanged EN 1092 PN25, ASME 300 and BS 10 Table H.

A-B-C Flanged ASME 150.

F-F-E The DP27G and DP27GY are limited to 120 °C.

G-G The DP27E is limited to 10 bar g @ 190 °C.

Note:
DP27 has a variable rate conical pressure adjustable spring fitted providing a downstream pressure range of 0.2 - 17 bar g.

DP27Y has a pressure spring with a range of 0.2 - 3 bar g.

DP27R Maximum downstream reduced pressure 15 bar g. The control pressure signal to the pilot diaphragm must be approximately 0.7 bar above the required reduced downstream pressure.

SHOPVALVES
GLOBAL VALVE SOLUTIONS | 阀门易购

SHOPVALVES
GLOBAL VALVE SOLUTIONS | 阀门易购

Body design conditions		PN25
Maximum design pressure	**A-D-E**	25 bar g @ 120 °C
	A-B-C	17.2 bar g @ 40 °C
Maximum design temperature		232 °C @ 21 bar g
Minimum design temperature		-10 °C
Maximum upstream pressure for saturated steam service For ASME 150, see A-B-C	**DP27, DP27R and DP27Y**	17 bar g
	DP27G and DP27GY	25 bar g
	DP27E	10 bar g
Maximum operating temperature For ASME 150, see A-B-C	**DP27, DP27Y**	232 °C @ 21 bar g
	DP27E	190 °C @ 10 bar g
	DP27G, DP27GY	120 °C @ 25 bar g
Minimum operating temperature **Note:** For lower operating temperatures consult Spirax Sarco		0 °C
Maximum differential pressure	**DP27, DP27R and DP27Y**	17 bar g
	DP27G and DP27GY	25 bar g
	DP27E	10 bar
Designed for a maximum cold hydraulic test pressure of:		38 bar g
Note: With internals fitted, test pressure must not exceed:		25 bar g

SHOPVALVES
GLOBAL VALVE SOLUTIONS | 阀门易购

SHOPVALVES
GLOBAL VALVE SOLUTIONS | 阀门易购

3. Installation

Note: Before actioning any maintenance programme for the pilot operated pressure reducing valve (PRV) observe the 'Safety information' in Section 1.

Referring to these Installation and Maintenance Instructions, name-plate and Technical Information Sheet, check that the product is suitable for the intended installation.

3.1 Supply

DP27 (Figure 1)

These are supplied ready for fitting and have a variable rate conical pressure spring suitable for a downstream pressure of 0.2 - 17 bar.

DP27Y (Figure 1)

The DP27Y is supplied as the DP27, but has a lower rate pressure adjustment spring for a downstream pressure range of 0.2 - 3 bar.

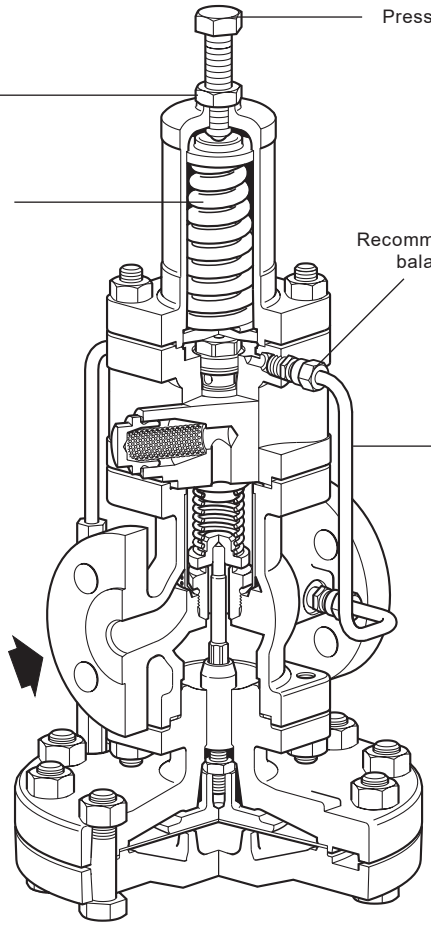

Fig. 1
DP27 and DP27Y

SHOPVALVES
GLOBAL VALVE SOLUTIONS | 阀门易购

SHOPVALVES
GLOBAL VALVE SOLUTIONS | 阀门易购

DP27E

The DP27E (Figure 2) is supplied as for the DP27 with a control spring but the maximum pressure is limited to 10 bar g due to the addition of the solenoid valve. A solenoid operated valve is fitted in the pipe between the pilot valve and the main diaphragm chamber and is thus in series with the normal pilot valve.

The purpose of the solenoid valve is to override the pilot valve thus causing the main valve to shut-off. It can be controlled by any device capable of interrupting the supply of current to the solenoid coil.

The solenoid is arranged to open the valve when the coil is energised so that whatever switching device is used it must be arranged to break the current to close the main valve. In this way the unit will always 'fail-safe' i.e. will close the main valve in the event of a failure in electrical supply.

Note: A special pilot valve assembly is used in the 'E' version to prevent leakage past the pilot valve plunger when the solenoid is used to close the valve.

Electrical supply

It is important that the solenoid is connected to the correct voltage. Therefore always check on the supply details which are stamped on the solenoid valve name-plate before attempting to connect up.

Electrical connection is by cable plug to DIN 43650. All wiring, connectors, etc. in close proximity to the valve should be of heat resisting type and comply with local and national electrical codes.

Earth

The solenoid valve should be adequately earthed.

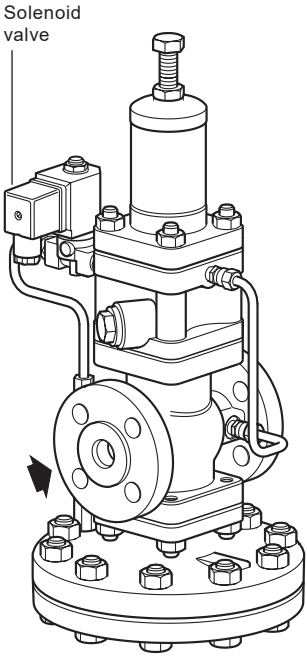

Fig. 2 DP27E

DP27R

The DP27R (Figure 3) is supplied ready for fitting. Downstream pressure can be adjusted remotely by a controlled air supply to the pilot diaphragm chamber. The actuating air supply must be at a pressure approximately 0.7 bar g above the required downstream pressure and controlled through a metal bodied self-relieving regulator. A check valve should be fitted to prevent steam entering the air system, in the unlikely event of a failure of the pilot diaphragm. Any filter should be fitted with a metal bowl and should preferably be on the upstream side of the check valve.

The actuating air supply controlled by the regulator should be connected to the union fitting attached to the air control block as shown in Figure 4. The air inlet connection is suitable for 6 mm O/D copper tube. The maximum reduced pressure available through the DP27R is 15 bar g. Typical installation is shown in Figure 9.

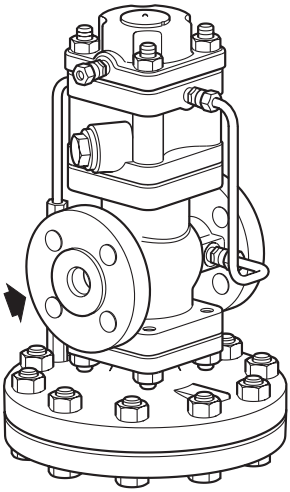

Fig. 3 DP27R

SHOPVALVES
GLOBAL VALVE SOLUTIONS | 阀门易购

SHOPVALVES
GLOBAL VALVE SOLUTIONS | 阀门易购

3.2 Fitting (Figures 4, 5 and 6)

The valve should always be fitted in a horizontal pipeline with the main diaphragm chamber below the line (Figure 4). To meet high capacities or widely varying loads, or where stand-by facility is required, two or more valves may be used in parallel (Figure 5).

For pressure turndown in excess of 10 to 1 consideration should be given to using the two valves in series. To avoid instability pipework volume between the valves should be equivalent to at least 50 pipe diameters in length of the intermediate correctly sized pipework. To ensure adequate drainage of the space between the two reducing valves a trap set should be fitted as shown in Figure 6.

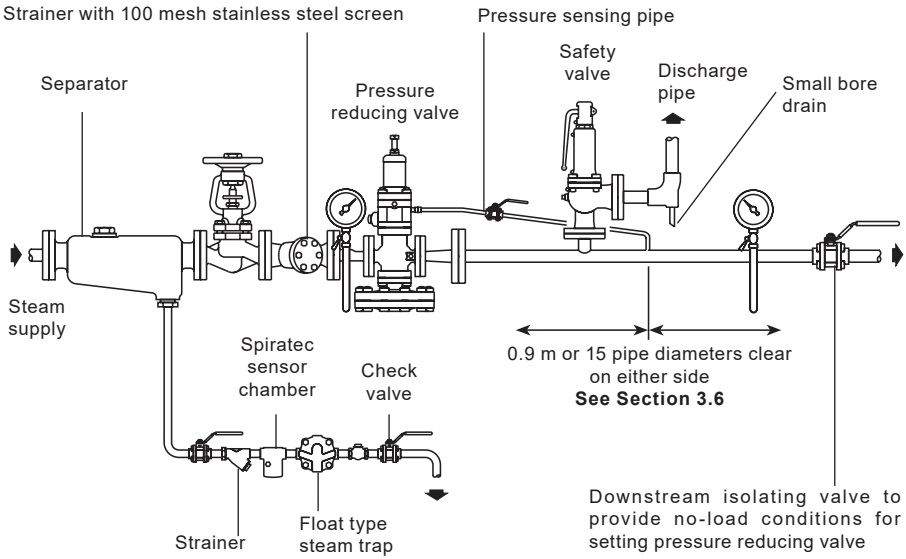

DP27 and DP27E

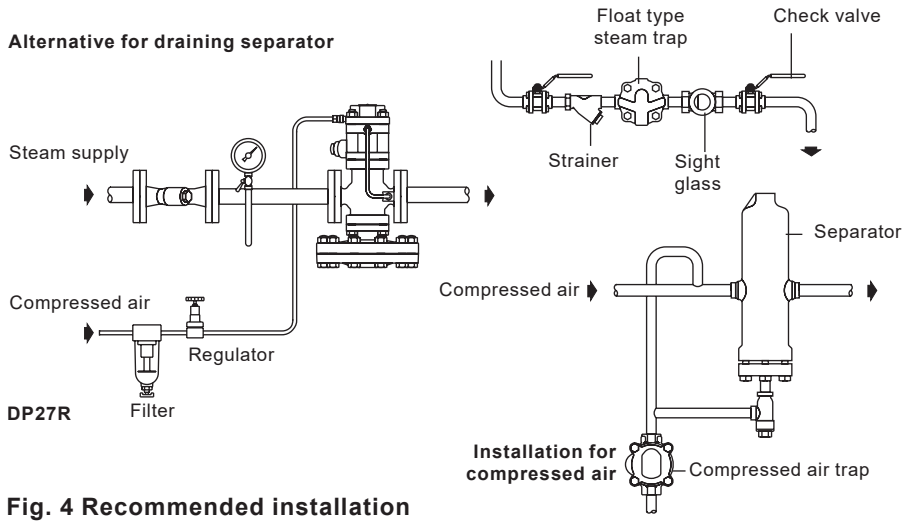

Fig. 4 Recommended installation

SHOPVALVES
GLOBAL VALVE SOLUTIONS | 阀门易购

SHOPVALVES
GLOBAL VALVE SOLUTIONS | 阀门易购

3.3 Pipeline sizing

The piping on both sides of the valve must be sized so that velocities do not exceed 30 m/s. This means that a properly sized valve will often be smaller than the connecting pipework.

3.4 Pipeline stresses

Line stresses caused by expansion or inadequate support should not be imposed on the valve body.

3.5 Isolating valves

These should preferably be of the full bore type.

3.6 Removal of condensate

It is recommended that a separator with trap set is fitted upstream of the valve to ensure dry steam conditions. If there is a rise in the low pressure line from the valve then a further drain point should be provided to keep the valve drained after shutdown.

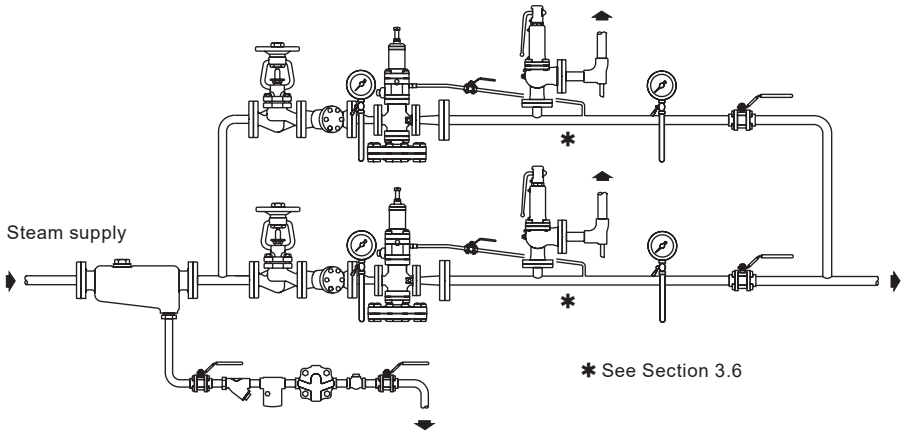

Fig. 5 Two pressure reducing valves in parallel

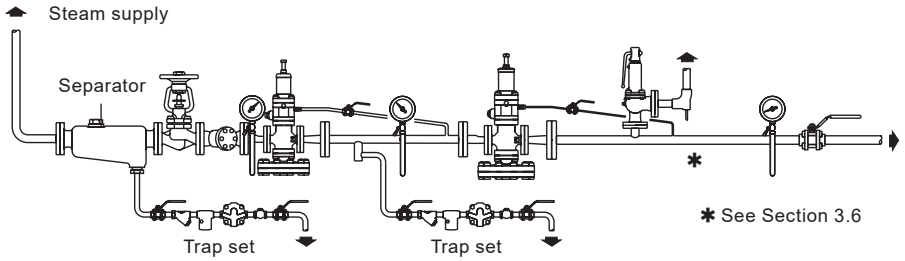

Fig. 6 Two pressure reducing valves installed in series

SHOPVALVES
GLOBAL VALVE SOLUTIONS | 阀门易购

SHOPVALVES
GLOBAL VALVE SOLUTIONS | 阀门易购

3.7 Protection from dirt

The valve should be protected by a pipeline strainer with 100 mesh screen. The strainer should be fitted on its side to prevent the accumulation of water. The strainer screen should be examined and cleaned at regular intervals.

3.8 Pressure sensing

For applications that require closer control, improved stability or maximum capacity condition the internal balance pipe should be replaced by an external pressure sensing pipe (supplied by others) as follows:

Remove the internal balance pipe assembly.
The resulting ⅛" BSP tapping in the side of the body should be blanked using the plug provided in the linen bag attached to the valve (which also contains the fitting instructions). The other ⅛" BSP tapping in the side of the pilot valve chamber, should be used to fit the external pressure sensing pipe. This is suitable for the fitting of 6 mm O/D pipe. If suitable pipe is not available the compression fitting can be removed and ¼" nominal bore steel pipe screwed directly into the pilot valve chamber.
The pressure sensing pipe should be connected into the top of the reduced pressure main at a point where in either direction there is a length of straight pipe uninterrupted by fittings for at least 1 m or 15 pipe diameters whichever is the greater. It should be arranged with a positive fall so that any condensate can drain away from the DP27. Where the size of the reduced pressure main makes it difficult to maintain a fall when entering the top of the main, the pressure sensing pipe may be connected in the side of the main.

3.9 Pressure gauges

It is essential to fit a pressure gauge on the upstream and downstream side so that the valve can be properly set and monitored.

3.10 Continuous duty

For continuous duty applications where a constant steam supply is essential then a parallel stand-by PRV station is recommended to allow for planned maintenance, see Figure 5, page 13. Alternatively a bypass line can be used (see Figures 8 and 9, page 17). It is important that the bypass should have a similar capacity to the pressure reducing valve which is achieved by choosing an appropriately sized valve or by using a reduced orifice in the line.
The handwheel should be padlocked to prevent unauthorised use, and when in use should be under constant manual supervision.
The bypass may be arranged above or to the side of the main assembly but never below it.

SHOPVALVES
GLOBAL VALVE SOLUTIONS | 阀门易购

SHOPVALVES
GLOBAL VALVE SOLUTIONS | 阀门易购

3.11 Safety valve

A safety valve should be fitted to protect the downstream equipment from excessive pressure. It should be set to lift below the safe working pressure of the downstream equipment, and will normally be sized to pass the full capacity of the PRV should the PRV fail in the fully open position. The safety valve set pressure should take account of its reseat characteristic and the 'No-load' pressure setting of the PRV. For example, the typical blowdown value (reseat differential) for a DIN type safety valve is 10% of set pressure. The minimum possible safety valve set pressure must therefore equal the no-load set pressure of the reducing valve plus the blowdown value of the safety valve plus a small margin of at least 0.1 bar. If the safety valve lifts and the working pressure is too close then it will not be able to close properly and will simmer, creating a leak which is often wrongly diagnosed as a result of a leaking reducing valve.
Discharge pipework should be taken to a safe place.

3.12 Position in relation to other control valves

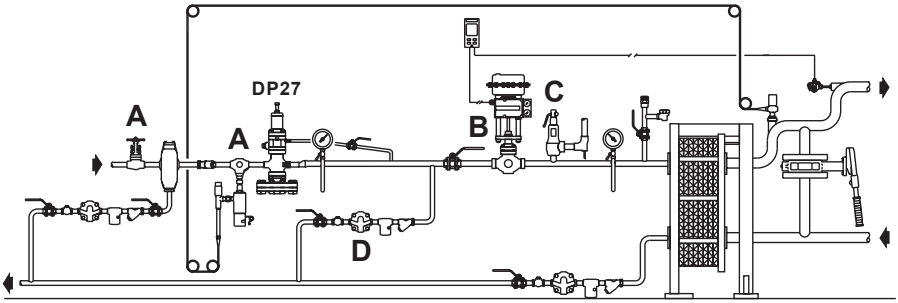

Fig. 7 DP27 position in relation to other control equipment

Line or system isolation valves (**A**), either remotely actuated or manual, should be installed on the upstream side of the DP27 reducing valve.

Where there is downstream control equipment (**B**), particularly when it is fast acting (for instance pulsed piston actuated valves) ensure the control equipment is at least 50 pipe diameters away from the DP27 to prevent pressure pulses being transmitted back causing unstable operation and premature wear or if this is impractical an intermediate vessel can provide a similar benefit.

Where a safety valve (**C**) is required to protect the system downstream of a DP27 and where a control valve is also being used downstream of the DP27, it is recommended that the safety valve is fitted downstream of the control valve rather than in between the DP27 and the control valve. If any slight leakage occurs this will avoid any pressure build-up causing nuisance operation of the safety valve but provide complete protection for the downstream system.

Where valves are installed downstream of the DP27 (**B**) the intermediate downstream pipework must be properly trapped (**D**) to ensure no condensate can build up on the downstream side of the DP27.

SHOPVALVES
GLOBAL VALVE SOLUTIONS | 阀门易购

SHOPVALVES
GLOBAL VALVE SOLUTIONS | 阀门易购

4. Commissioning

4.1 Setting procedure (Figure 8 and Figure 9)

1. Ensure that all connections are properly made and that all valves are closed.

DP27, DP27E and DP27Y (Figure 8)

2. Close all valves at reducing valve station, including valves on bypass line if fitted.

3. Check that adjustment screw is turned fully anticlockwise until spring is slack.

DP27R (Figure 9)

2. Close all valves at reducing valve station, including the valve on the bypass line, if fitted.

3. Check that the actuating air supply is off and the pressure is zero.

4. Check that the pressure gauge isolating cocks are open.

5. For correct operation of the valve it is important that the pilot and main valves are not subjected to dirt or other hard particles. Therefore, prior to bringing the valve into operation, ensure that the upstream pipework has been cleared of all loose dirt and hard particles and that the main strainer screen is examined and cleaned if necessary.

6. Slowly open the upstream isolating valve until it is fully open.

DP27, DP27E and DP27Y

7. Using a 19 mm A/F spanner slowly turn adjustment screw in a clockwise direction until desired downstream pressure reading is obtained.

8. Holding the adjustment screw in position with the spanner tighten down the lock-nut to secure the setting of the adjustment spring.

DP27R

7. Slowly admit actuating air through the pressure regulator until the desired downstream pressure is obtained.

Note
To facilitate resetting of the reducing valve it may be desirable to position the downstream pressure gauge at a viewpoint close to the air regulator.
If this necessitates fitting the pressure gauge below the steam line, the interconnecting pipe should be drained at the low point otherwise the gauge will give a false reading.

9. Slowly open the downstream valve until it is fully open.

Note: After installation or maintenance ensure that thet system is fully functional. Carry out tests on any alarms or protective devices. It is recommended that after commissioning the pilot filter is changed and the spare one supplied with the valve is fitted.

SHOPVALVES
GLOBAL VALVE SOLUTIONS | 阀门易购

SHOPVALVES
GLOBAL VALVE SOLUTIONS | 阀门易购

4.2 Two or more valves in parallel

When more than one reducing valve is used it is an advantage to use two valves of unequal size, the smaller one being chosen to meet the lower load requirements and the larger valve to come into operation so that both meet the normal and maximum demand.
It is necessary to commission each valve independently (one at a time) following the procedure detailed in Section 4.1 but setting the smaller valve at a pressure higher than the larger valve.

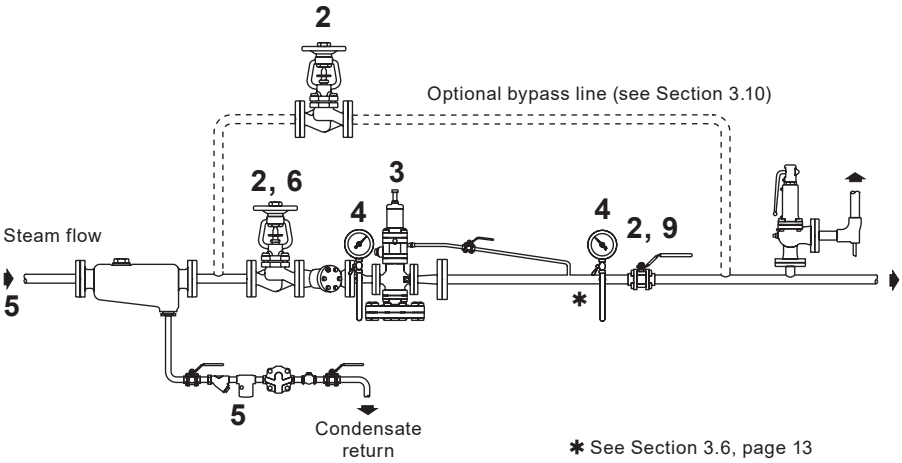

Fig. 8 Setting procedure sequence DP27, DP27E and DP27Y

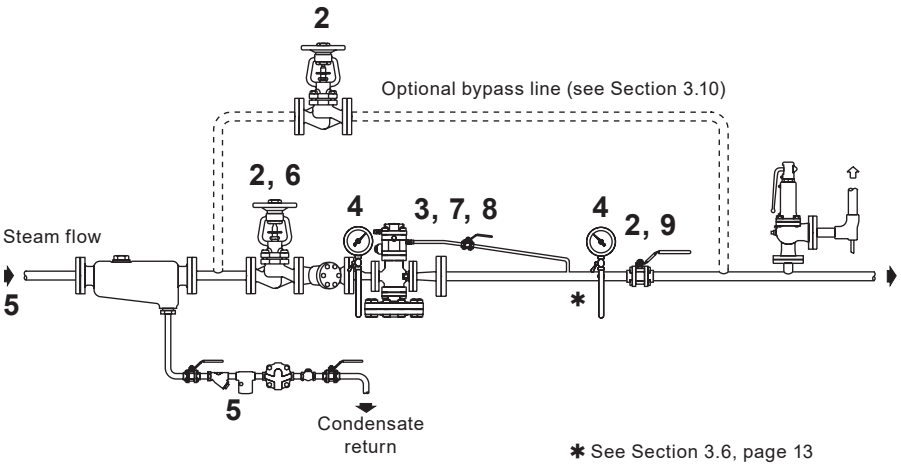

Fig. 9 Setting procedure sequence DP27R

SHOPVALVES
GLOBAL VALVE SOLUTIONS | 阀门易购

SHOPVALVES
GLOBAL VALVE SOLUTIONS | 阀门易购

5. Maintenance

Note: Before actioning any maintenance programme observe the 'Safety information' in Section 1.

Warning:
The body gasket (all DP27 derivatives) and actuating chamber gasket (DP27R) contains a thin stainless steel support ring which may cause physical injury if not handled and disposed of correctly.

5.1 Routine maintenance

It is recommended that the valve is dismantled once every twelve to eighteen months for a complete overhaul and ideally this should be carried out with the valve removed from the line.

The following parts should be inspected and refurbished or replaced as necessary:

- Main valve seat and valve head.
- Pilot valve assembly.
- Pilot filter element.
- Internal strainer screen.
- Main diaphragms.
- Pilot diaphragms.

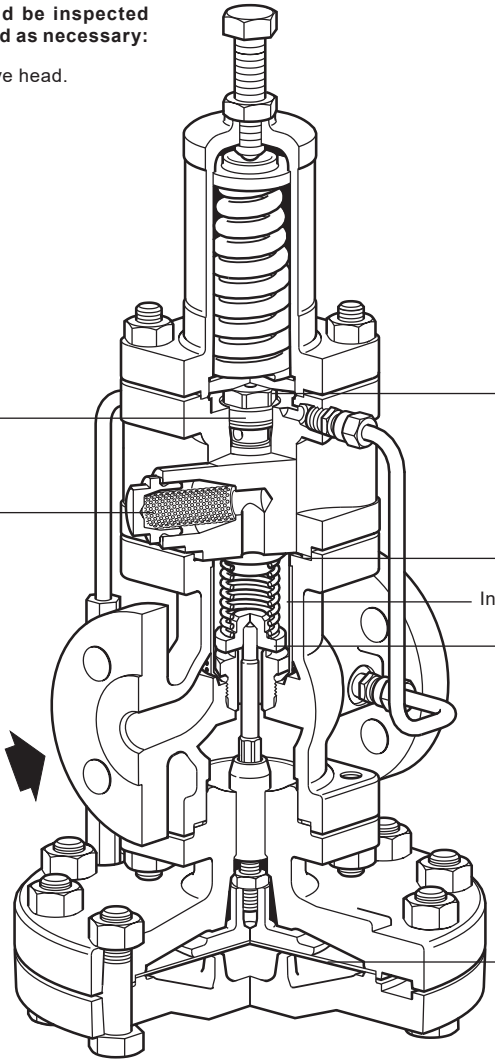

SHOPVALVES
GLOBAL VALVE SOLUTIONS | 阀门易购

SHOPVALVES
GLOBAL VALVE SOLUTIONS | 阀门易购

5.2 How to renew the pilot filter element

1. Isolate the reducing valve and zero the pressure.
2. Unscrew the filter cap and carefully withdraw the filter element.
3. Replace the element and tighten the filter cap to 90 - 100 N m.
   Note: The gasket is re-usable.

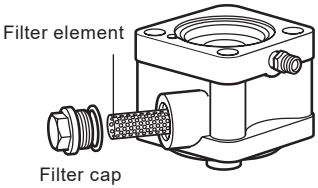

5.3 How to renew or change the pressure adjustment spring

Isolate the reducing valve and zero the pressure in order to change the pressure adjustment spring.

1. Release the adjustment lock-nut.
2. Turn the adjustment screw anticlockwise. Ensure there is no compression on the pressure adjustment spring.
3. Undo the 4 off spring housing securing nuts and remove the spring housing.
4. Remove the pressure adjustment spring and the top spring plate.
5. Reassemble in reverse order.

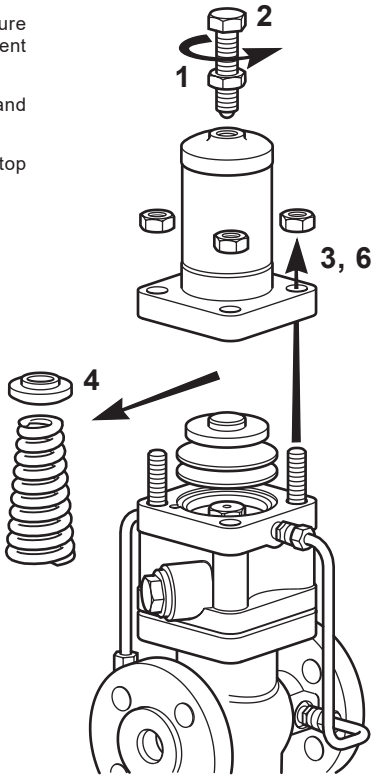

SHOPVALVES
GLOBAL VALVE SOLUTIONS | 阀门易购

SHOPVALVES
GLOBAL VALVE SOLUTIONS | 阀门易购

5.4 How to renew the pilot valve assembly

6. DP27, DP27E and DP27Y

Isolate the reducing valve and zero the pressure and proceed to unscrew the 4 off spring housing securing nuts and remove spring housing, bottom spring plate and diaphragms.

DP27R

Isolate the actuating air supply and zero the pressure and proceed to unscrew the 4 off actuating chamber nuts and remove the air control block and diaphragms.

7. Unscrew and remove the pilot valve assembly (19 mm A/F). The pilot assembly has an integral PTFE seal.
The following handling precautions should be observed.

Handling precautions for PTFE
Within its working temperature range PTFE is a completely inert material, but when heated to its sintering temperature it gives rise to gaseous decomposition products or fumes which can produce unpleasant effects if inhaled. Fumes can be produced during processing: for example, when the material is heated to sinter it, or when brazed connections are being made to cable insulated PTFE. The inhalation of these fumes is easily prevented by applying local exhaust ventilation to atmosphere as near to their source as possible.
Smoking should be prohibited in workshops where PTFE is handled because tobacco contaminated with PTFE will during burning give rise to polymer fumes. It is therefore important to avoid contamination of clothing, especially the pockets, with PTFE and to maintain a reasonable standard or personal cleanliness by washing hands and removing any PTFE particles lodged under the fingernails.

8. Apply superlube grease to the threads before screwing the new pilot valve into the housing.
Torque 45 - 50 N m.

9. Check that there is a very slight clearance between the top of the plunger and a straight edge placed across the diaphragm location recess.

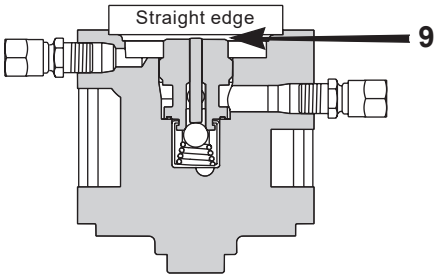

10. Refit the two diaphragms making sure that they are fitted the same way round as they were removed and that all contact faces are clean. Diaphragms showing signs of wear or damage should be replaced.

11. DP27, DP27E and DP27Y
Replace the bottom spring plate.

12. DP27, DP27E and DP27Y
Assemble the spring housing and tighten the nuts to the recommended torques shown in Table 1.

DP27R
Assemble the air control block and tighten the nuts to the recommended torques shown in Table 1.

Bring the valve back into commission, following as many Steps as necessary in Section 4.

SHOPVALVES
GLOBAL VALVE SOLUTIONS | 阀门易购

SHOPVALVES
GLOBAL VALVE SOLUTIONS | 阀门易购

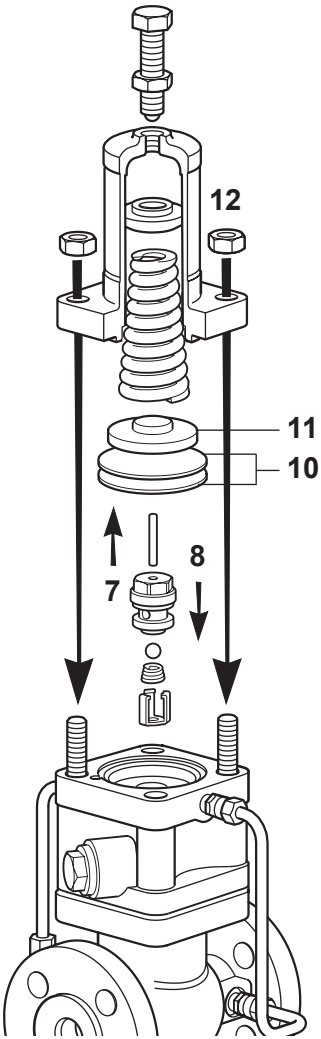

Table 1

Recommended tightening torques for spring housing/actuating chamber cover securing studs and nuts

Size of valve	Nut size	Tightening torques
DN15, DN20, DN25 and DN32	M10	40 - 50 N m
DN40 and DN50	M12	45 - 55 N m

SHOPVALVES
GLOBAL VALVE SOLUTIONS | 阀门易购

SHOPVALVES
GLOBAL VALVE SOLUTIONS | 阀门易购

5.5 How to clean or replace the internal strainer screen

DP27, DP27E and DP27Y
Isolate the reducing valve and zero the pressure.

DP27R
Isolate the actuating air supply and zero the pressure.

13. Unscrew the unions and release the pipework.

14. Unscrew the nuts.

15. DP27, DP27E and DP27Y
Remove the pilot valve housing; complete with spring housing assembly.

DP27R
Remove the pilot valve housing, complete with air control block.

16. Remove the internal strainer screen and clean or replace.

17. Ensure the gasket faces are clean.

18. Check that the main valve return spring is in position.

19. Fit a new gasket.

20. Replace the internal strainer screen.

21. DP27, DP27E and DP27Y
Assemble the pilot valve housing complete with spring housing assembly and tighten the nuts to the recommended torques shown in Table 1.

DP27R
Assemble the pilot valve housing complete with air control block and tighten the nuts to the recommended torques shown in Table 1.

22. Refit the pipework and retighten unions to ensure a tight seal.

Bring the valve back into commission, following as many Steps as necessary in Section 4.

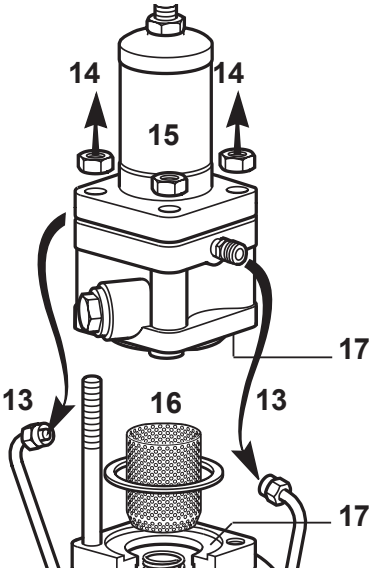

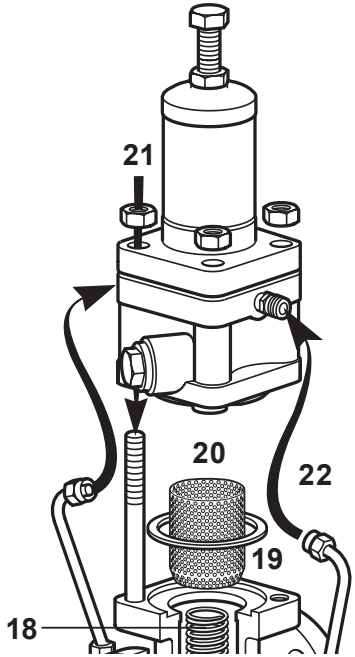

SHOPVALVES
GLOBAL VALVE SOLUTIONS | 阀门易购

SHOPVALVES
GLOBAL VALVE SOLUTIONS | 阀门易购

5.6 How to renew the pilot valve diaphragms

DP27, DP27E and DP27Y
Isolate the reducing valve and zero the pressure.

DP27R
Isolate the actuating air supply and zero the pressure.

23. DP27, DP27E and DP27Y
Unscrew the nuts and remove: spring housing, bottom spring plate and old diaphragms.

DP27R
Unscrew the nuts and remove the air control block and old diaphragms.

24. Ensure that all contact faces are cleaned. New diaphragms should be fitted such that the precoated sealant (which is only applied to one diaphragm) faces down contacting the sealing face of the diaphragm chamber.

25. DP27, DP27E and DP27Y
Replace the bottom spring plate.

26. DP27, DP27E and DP27Y
Assemble the spring housing and tighten the nuts to the recomended torque shown in Table 1.

DP27R
Assemble the air control block and tighten the nuts to the recommended torques shown in Table 1.

Bring the valve back into commission, following as many Steps as necessary in Section 4.

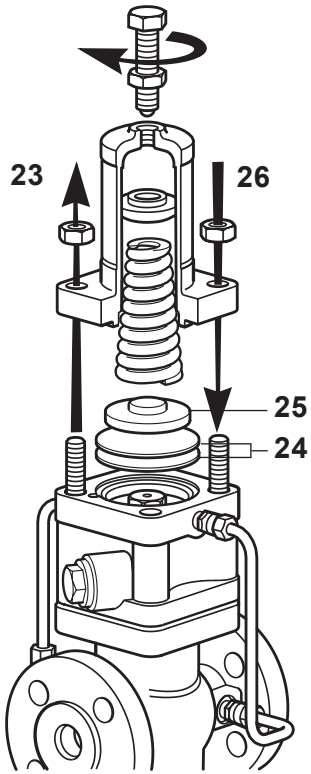

SHOPVALVES
GLOBAL VALVE SOLUTIONS | 阀门易购

SHOPVALVES
GLOBAL VALVE SOLUTIONS | 阀门易购

5.7 How to renew or clean main diaphragms

Isolate the reducing valve and zero the pressure.

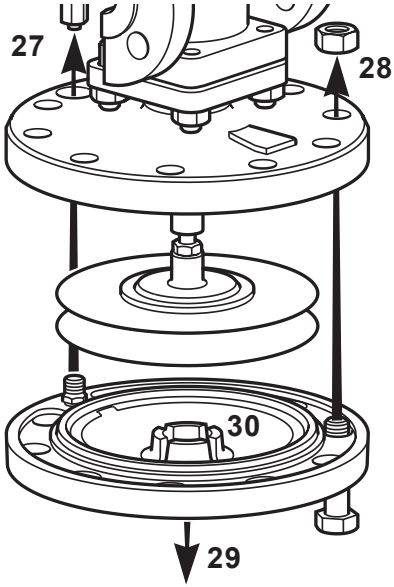

27. Undo the long union nut and pull away.

28. Undo the M12 nuts and bolts.

29. Drop away the lower diaphragm chamber, the two diaphragms, diaphragm plate and the pushrod assembly.

30. Thoroughly clean the lower diaphragm chamber making sure contact faces are clean.

31. Replace the diaphragm plate and pushrod assembly and loosely fit the lower diaphragm chamber on two bolts either side of the union connection to locate the spigot in the recess.

32. Bring the two new diaphragms together (where precoated sealant is applied this should face outwards) and slide into position.
If the diaphragms are not renewed, but cleaned only, care must be taken to replace the diaphragms in their original order.

33. Push the lower diaphragm chamber home to locate in the recess and refit the M12 nuts and bolts. Progressively and evenly tighten to a torque of 80 - 100 N m.

34. Retighten the long union nut to ensure a steam tight seal.

Bring the valve back into commission, following as many Steps as necessary in Section 4.

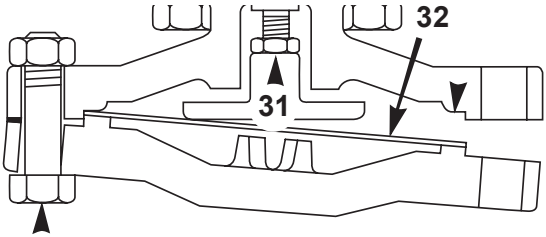

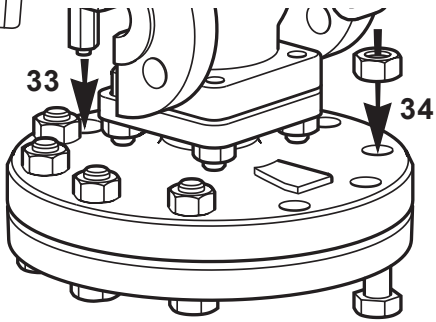

SHOPVALVES
GLOBAL VALVE SOLUTIONS | 阀门易购

SHOPVALVES
GLOBAL VALVE SOLUTIONS | 阀门易购

5.8 How to service or renew the main valve and seat

DP27, DP27E and DP27Y
Isolate the reducing valve and zero the pressure.

DP27R
Isolate the actuating air supply and zero the pressure.

35. Unscrew the unions and release the pipework.

36. Unscrew the nuts.

37. DP27, DP27E and DP27Y
Remove the pilot valve housing, complete with spring housing assembly.

DP27R
Remove the pilot valve housing, complete with air control block.

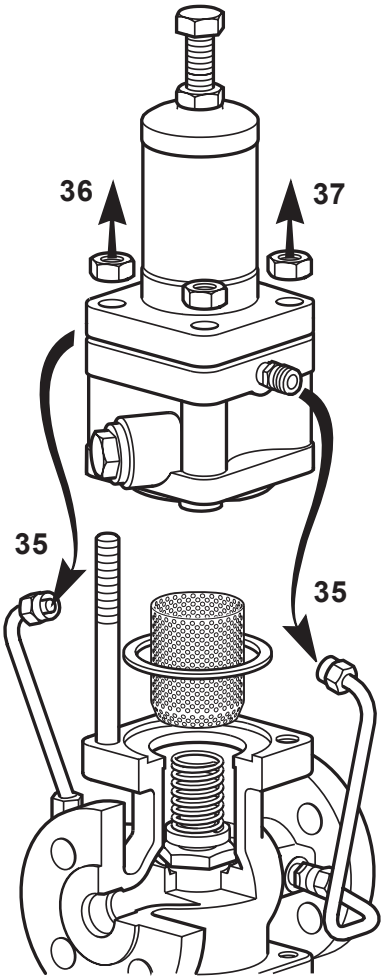

SHOPVALVES
GLOBAL VALVE SOLUTIONS | 阀门易购

SHOPVALVES
GLOBAL VALVE SOLUTIONS | 阀门易购

38. Remove the main valve plus internal strainer screen and clean.

39. Remove the main valve spring and the main valve head. Clean to remove dirt or scale as necessary.

40. Remove the main valve seat. Clean and remove dirt and scale as necessary.
Note: Examine the faces of the main valve head and seat. If they are only slightly worn they may be lapped on a flat plate using a fine grinding paste. If either is badly worn or unfit for further use they must be replaced.

41. Refit the valve seat applying jointing compound to the seating faces and tighten to the recommended torque shown in Table 2, opposite.
Where a new part has been fitted it will be necessary to reset the main valve pushrod to give the correct valve lift.
To do this it is necessary to expose the main diaphragm plate and pushrod assembly.

42. Undo the long nuts and pull away.

43. Undo the M12 nuts and bolts.

44. Drop away the lower diaphragm chamber, the two diaphragms, diaphragm plate and pushrod assembly.

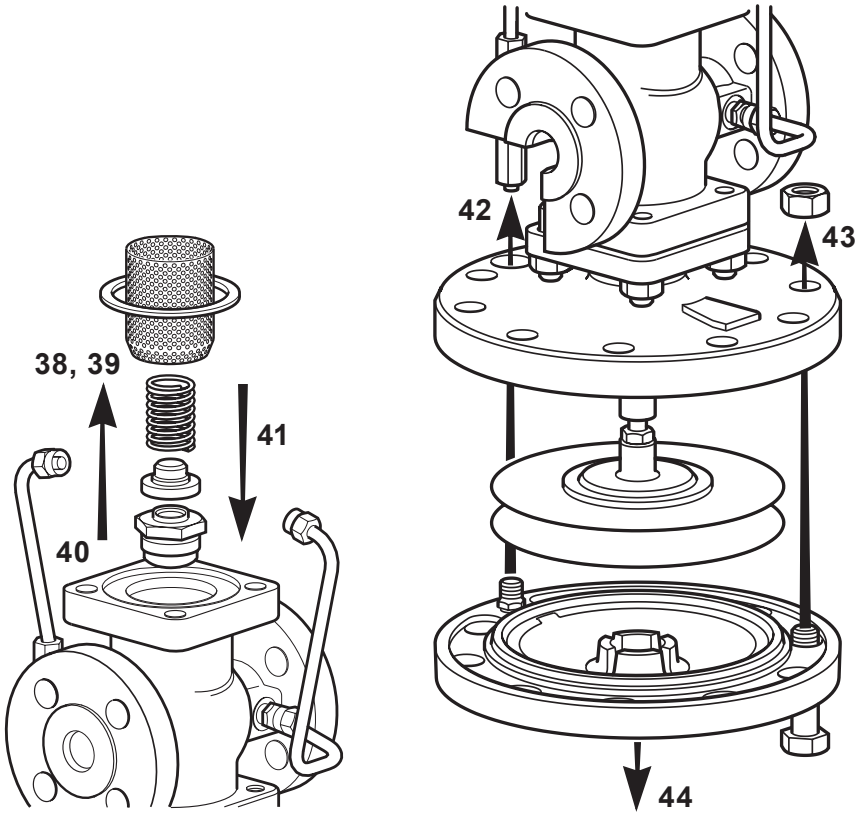

SHOPVALVES
GLOBAL VALVE SOLUTIONS | 阀门易购

SHOPVALVES
GLOBAL VALVE SOLUTIONS | 阀门易购

Table 2 Recommended tightening torques for main valve seat

Size of valve	Width across flats		Tightening torques
DN15 and DN15 LC	30 mm A/F	(External)	110 - 120 N m
DN20	36 mm A/F	(External)	140 - 150 N m
DN25	19 mm A/F	(Inside)	230 - 250 N m
DN32	24 mm A/F	(Inside)	300 - 330 N m
DN40	30 mm A/F	(Inside)	450 - 490 N m
DN50	41 mm A/F	(Inside)	620 - 680 N m

45. Refit the pushrod assembly.

46. Refit the main valve head, make sure valve locates on seat.

47. Check the valve lift shown in Table 3 using a depth gauge and adjust if necessary by screwing the pushrod in or out of the diaphragm plate.

Table 3

Size of valve	Valve lift
DN15LC	2.5 mm
DN15	2.5 mm
DN20	2.5 mm
DN25	3.0 mm
DN32	3.5 mm
DN40	4.5 mm
DN50	5.0 mm

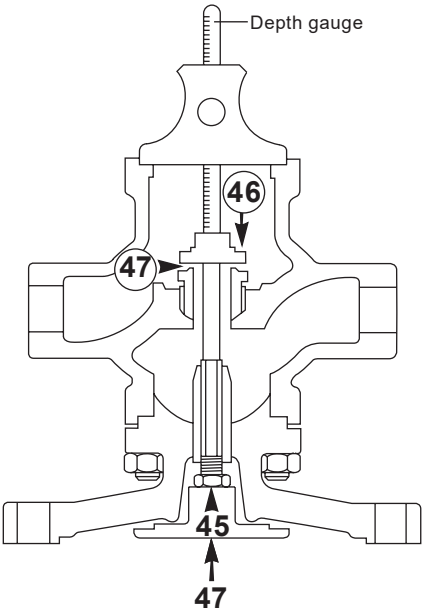

SHOPVALVES
GLOBAL VALVE SOLUTIONS | 阀门易购

SHOPVALVES
GLOBAL VALVE SOLUTIONS | 阀门易购

48. Thoroughly clean the lower diaphragm chamber making sure contact faces are clean.

49. Replace the diaphragm plate and pushrod assembly and loosely fit the lower diaphragm chamber on two bolts either side of the union connection to locate the spigot in the recess.

50. Refit the diaphragms in exactly the same way as when they were dismantled.

51. Push the lower diaphragm chamber home to locate in the recess and refit the M12 nuts and bolts. Progressively and evenly tighten to a torque of 75 N m.

52. Retighten the long union nut to ensure a steam tight seal.

53. Refit the main valve head.

54. Replace the main valve return spring.

55. Fit a new gasket.

56. Replace the internal strainer screen.

57. **DP27, DP27E and DP27Y**
Assemble the pilot valve housing complete with spring housing assembly and tighten the nuts to the recommended torques shown in Table 1.

DP27R
Assemble the pilot valve housing complete with air control block and tighten the nuts to the recommended torques shown in Table 1.

58. Refit the pipework and retighten the unions to ensure a tight seal.

Bring the valve back into commission, following as many Steps as necessary in Section 4, page 16.

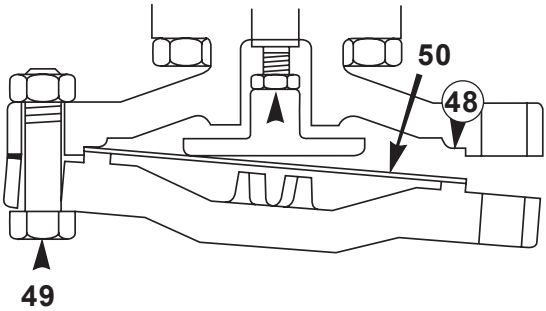

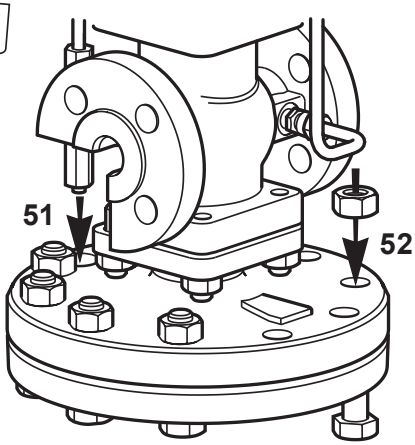

SHOPVALVES
GLOBAL VALVE SOLUTIONS | 阀门易购

SHOPVALVES
GLOBAL VALVE SOLUTIONS | 阀门易购

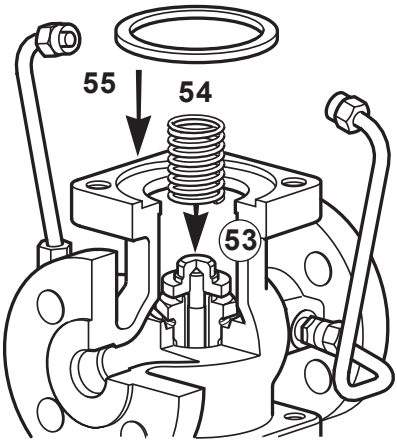

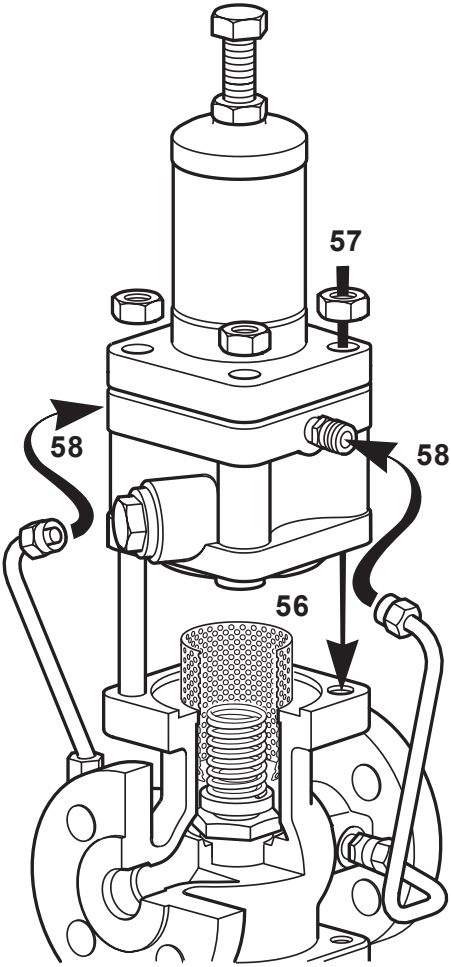

SHOPVALVES
GLOBAL VALVE SOLUTIONS | 阀门易购

SHOPVALVES
GLOBAL VALVE SOLUTIONS | 阀门易购

5.9 How to service or renew the solenoid valve

DP27E
Depressurize the valve and turn off the electrical power supply.

59. Undo the retaining nut and slip the entire solenoid enclosure off the solenoid base and sub-assembly or plugnut/core tube sub-assembly.

60. Unscrew the bonnet or solenoid base sub-assembly and remove the core spring, core assembly and body gasket.
All parts are now accessible for cleaning replacement. Replace worn or damaged parts with a complete Spare parts kit (item '**W**', see Section 6.2) for best results.

61. Reassemble in reverse order paying careful attention to exploded views provided.

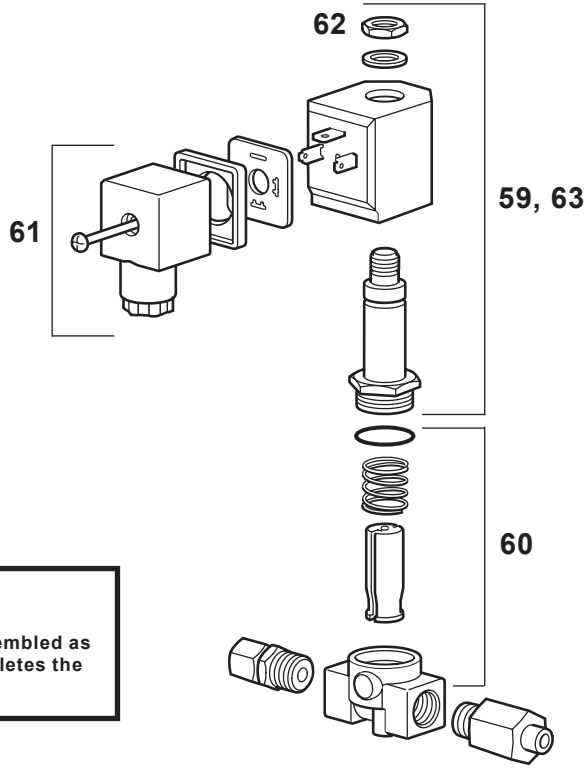

CAUTION
The solenoid must be fully reassembled as the housing is part of, and completes the magnetic circuit.

5.10 Coil replacement

Switch off the electrical power supply and disconnect the coil lead wires.

62. Undo the retaining nut.

63. Slip the washer, insulating washers and coil off the solenoid base sub-assembly.
Reassemble in reverse order (see **CAUTION** above).

SHOPVALVES
GLOBAL VALVE SOLUTIONS | 阀门易购

SHOPVALVES
GLOBAL VALVE SOLUTIONS | 阀门易购

6. Spare parts

6.1 Interchangeability of spares

The following table shows how in certain sizes some parts are interchangeable. For example in the line headed 'Main diaphragm' the diaphragm used in the screwed valves ½" and ¾" is common to these sizes by the letter 'a', the letter 'c' indicates that one diaphragm is common to the DN40 and DN50 valves. All spares are interchangeable with the DP27T and where marked † are interchangeable with the 37D temperature control.

		Screwed				Flanged						
Size DN		½"LC	½"	¾"	1"	15LC	15	20	25	32	40	50
Maintenance kit		a	a	a	b	f	f	a	b	c	d	e
Main diaphragm		a	a	a	b	a	a	a	b	b	c	c
Pilot diaphragms	†	a	a	a	a	a	a	a	a	a	a	a
Pilot valve assembly		a	a	a	a	a	a	a	a	a	b	b
Pilot filter element		a	a	a	a	a	a	a	a	a	a	a
Main valve assembly	†	a	b	c	d	a	b	c	d	e	f	g
Internal strainer screen	†	a	a	a	b	f	f	a	b	c	d	e
Main valve return spring	†	a	a	a	a	a	a	a	a	a	c	c
Pressure adjustment spring		a	a	a	a	a	a	a	a	a	a	a
Control pipe assembly	†	a	a	a	b	f	f	a	b	c	d	e
Balance pipe assembly		a	a	a	b	f	f	a	b	c	d	e
Body gasket	†	a	a	a	a	a	a	a	a	a	b	b
Set of spring housing securing studs and nuts		a	a	a	a	a	a	a	a	a	b	b
Set of main body studs and nuts	†	a	a	a	a	a	a	a	a	a	b	b
Set of diaphragm securing bolts and nuts	†	a	a	a	a	a	a	a	a	a	b	b
Pushrod and main diaphragm plate assembly		a	a	a	b	a	a	a	b	b	c	c

SHOPVALVES
GLOBAL VALVE SOLUTIONS | 阀门易购

SHOPVALVES
GLOBAL VALVE SOLUTIONS | 阀门易购

6.2 Spare parts

The spare parts available are shown in solid outline. Parts drawn in a grey line are not available as spares.

Available spares

Maintenance kit A stand-by set of spares for general maintenance purposes and covers all spares marked *			
Main diaphragm (2 off) *			**A**
Pilot diaphragm (2 off) *			**B**
Pilot valve assembly *			**C** or **C1**
Pilot valve filter element and gasket (3 pieces)			**E, F**
Main valve assembly			**K, L**
Internal strainer screen *			**M**
Main valve return spring *			**N**
Pressure adjustment spring (Not required for DP27R)	**DP27 and DP27E**	0.2 to 17 bar	**O**
	DP27Y	0.2 to 3 bar	
Control pipe assembly			**P**
Downstream pressure balance pipe assembly (internal pressure sensing pipe) *			**Q**
Body gasket (3 off) *			**R**
Pilot valve block gasket (DP27R only)			**R1**
Set of spring housing/actuating chamber cover securing studs and nuts (set of 4)			**S**
Set of main body studs and nuts (set of 4)			**T**
Set of diaphragm securing bolts and nuts	Valve sizes	DN15 - DN32 (set of 10)	**V**
		DN40 and DN50 (set of 12)	
Pushrod and main diaphragm plate assembly			**Y**

Type DP27E only

Solenoid valve complete	**W**
Replacement coil	**X1**
Valve seat and core assembly	**X2**

How to order spares

Always order spares by using the description given in the column headed 'Available spares' and state the size and type of the pressure reducing valve.

Example:

1 - Main valve assembly for a Spirax Sarco DN25 DP27 pilot operated pressure reducing valve.

SHOPVALVES
GLOBAL VALVE SOLUTIONS | 阀门易购

SHOPVALVES
GLOBAL VALVE SOLUTIONS | 阀门易购

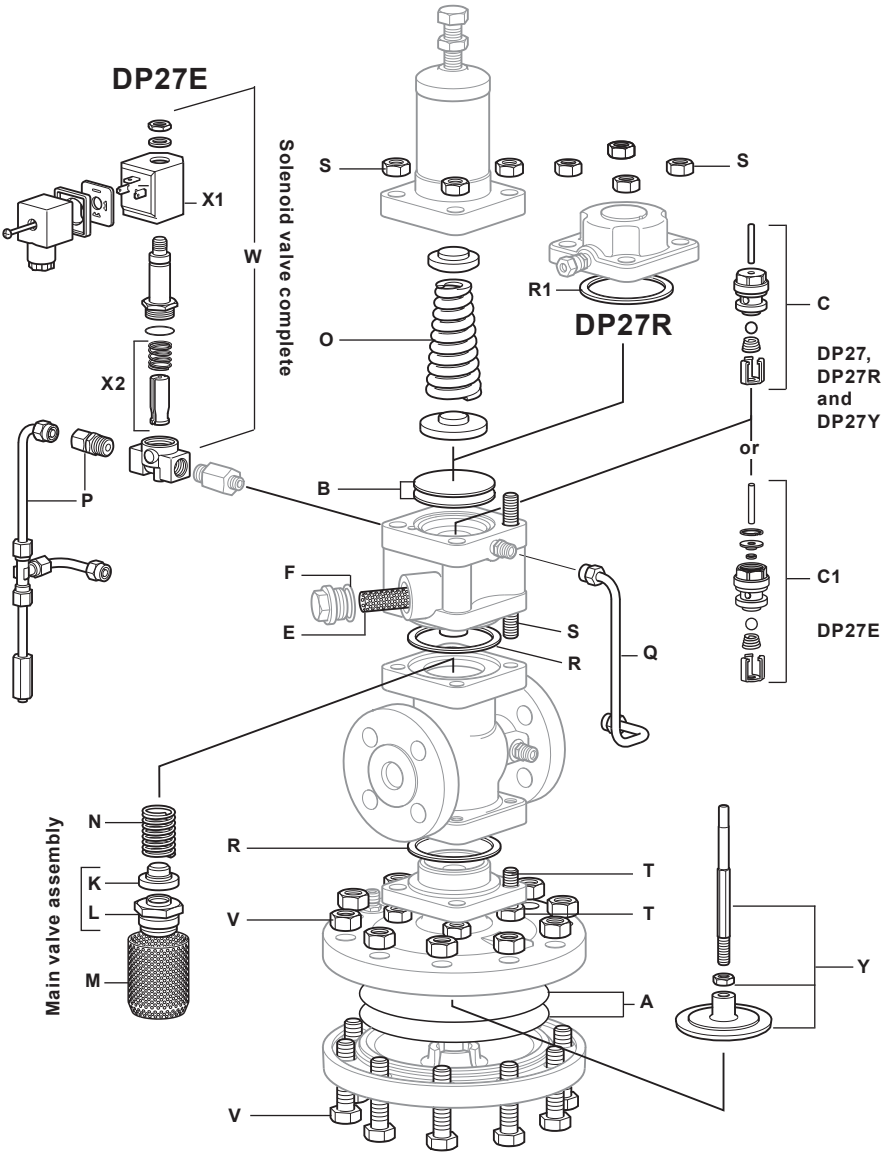

SHOPVALVES
GLOBAL VALVE SOLUTIONS | 阀门易购

SHOPVALVES
GLOBAL VALVE SOLUTIONS | 阀门易购

7. Fault finding

7.1 Preliminary procedure

Before undertaking the following fault finding procedure, ensure the valve has been isolated and that upstream and downstream pressures are zero. Possible fault checks are given in a logical order below.

7.2 Downstream pressure zero or too low

If downstream pressure drops below set pressure or is zero check the following:

1. No high pressure steam reaching the reducing valve. Check that steam is turned on and that the strainer is clear. (To assist with commissioning and fault finding it is recommended to fit an upstream pressure gauge).
2. Pressure adjustment spring broken.
3. Pipe assembly (Item '**P**' in Section 6.2) blocked. Remove by uncoupling union nuts and blow through to clear obstruction.
4. Control orifice blocked. Unscrew from outlet port and clear out obstruction. For identification this coupling has a groove around the hex.
5. Main diaphragms fractured.
   Replace diaphragms following Steps 27 to 34, Section 5.7.
6. Pilot valve plunger too short.
   Check as Section 5.4, Step 9.
7. Valve capacity insufficient for downstream conditions.
   a) Check that the upstream pressure is correct. If it is low, the capacity of the valve will be reduced.
   b) Ensure that the pressure sensing pipe is fitted as recommended in Section 3.8 and if necessary fit an external pressure sensing pipe as described. If the downstream pressure is still too low, then a larger valve with more capacity is required.

7.3 Downstream pressure too high

If the pressure on the downstream side of the reducing valve has risen above the required set pressure check the following:

1. Downstream pressure sensing pipe blocked. Dismantle and blow through.
2. Control orifice (item '**P1**' in Section 6.2) blocked. Unscrew pipework from side of body and clean out. For identification this coupling has a groove around the hex.
3. Pilot valve diaphragms fractured.
   Check and replace (see Section 5.6).
4. Pilot valve or pilot valve plunger is sticking. Follow Steps 6 to 9, Section 5.4.
   Check as Section 5.4, Steps 6 to 12
5. Main valve not seating.
   Check and replace (see Section 5.8).
6. Main valve pushrod sticking. Follow Steps 27 to 34, Section 5.7.
7. Pilot valve plunger too long.
   Check as Section 5.4, Step 9.
8. Pilot valve not seating.
   Check as Section 5.4, Steps 6 to 12.

SHOPVALVES
GLOBAL VALVE SOLUTIONS | 阀门易购

SHOPVALVES
GLOBAL VALVE SOLUTIONS | 阀门易购

7.4 Hunting

Hunting may coincide with variations in steam load. If this is the case, the following checks should be made before dismantling the valve:

1. Check that the upstream pressure is stable. If the pressure drops during full-load conditions, it is possible that there is a partial blockage upstream, or that the upstream pipework is undersized. If the upstream pressure is low, the effect will be to reduce the capacity of the valve with the possibility of not maintaining the downstream pressure during full-load conditions.
2. If the upstream pressure is correct, and stable, set the valve on dead-end conditions.
   Apply full-load to the valve.
   If the downstream pressure drops excessively during full-load condition, it is likely that the valve is undersized, in which case it should be replaced.
   Once it has been determined that the upstream pressure is correct and stable, and that the valve is correctly sized, the following check should be carried out on the valve:
3. Steam is very wet. Ensure the valve installation is as recommended in Figure 4.
4. The point at which the external pressure sensing pipe is tapped into the main is in a turbulent area. Refer to Section 3.8 for guidance.
5. Loose dirt in pipe assembly (Item '**P**' in Section 6.2). Remove pipe assembly. Blow through to clear.
6. Pilot valve or pilot valve plunger is sticking. Follow Steps 6 to 9, Section 5.4.
7. Main valve pushrod sticking. Follow Steps 27 to 34, Section 5.7.
8. Pilot diaphragms or main diaphragms overstretched.
   To replace, see Section 5.6.

SHOPVALVES
GLOBAL VALVE SOLUTIONS | 阀门易购

SHOPVALVES
GLOBAL VALVE SOLUTIONS | 阀门易购

SHOPVALVES
GLOBAL VALVE SOLUTIONS | 阀门易购