Local regulations may restrict the use of this product to below the conditions quoted.
In the interests of development and improvement of the product, we reserve the right to change the specification without notice. © Copyright 2026

DRV4 and DRV4G Cast Steel Pressure Reducing Valves

Description

The **DRV4** is a cast steel direct acting bellows sealed pressure reducing valve. **The standard version** has an EPDM diaphragm and is suitable for steam, water and air applications. The DRV4 is available with a Nitrile rubber diaphragm (suffix **'N'**) for oil applications. A Nitrile rubber soft seated version (suffix **'G'**, limited to 90 °C) is also available for applications that require tight shut-off. It is recommended that for these applications, a maximum pressure turndown ratio of 10:1 is observed.
Note: To protect the actuator diaphragm on steam applications a WS4 water seal pot must be installed in the downstream pressure signal line to the actuator. Refer to TI-S12-03 for details.

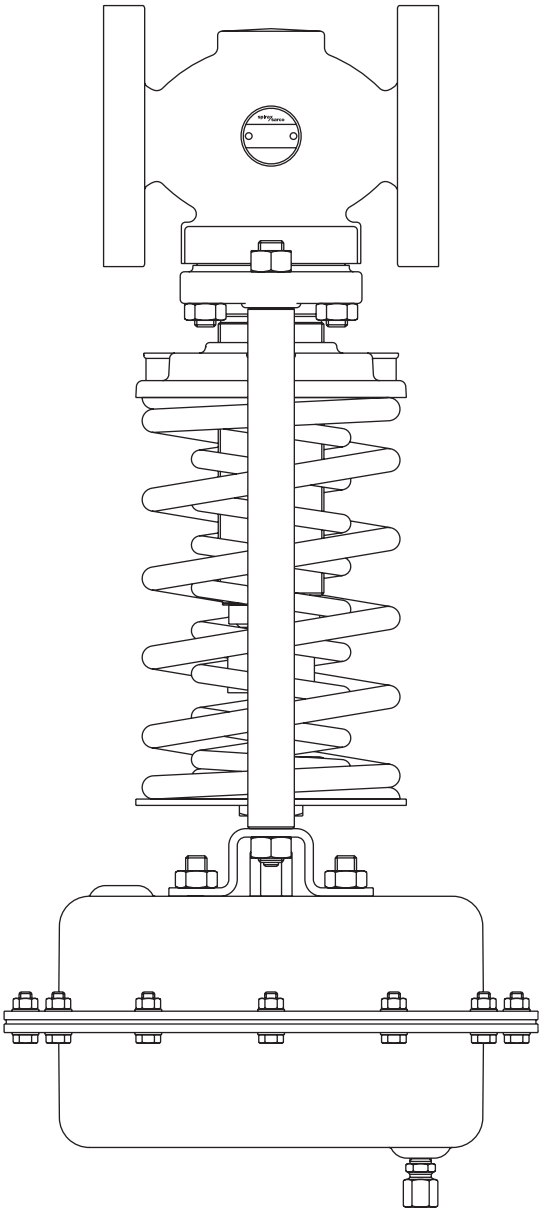

SHOPVALVES
GLOBAL VALVE SOLUTIONS | 阀门易购

Available types

DRV4 and **DRV4G** are available in 6 pressure ranges (suffix 1-6).

Downstream pressure ranges:

Range	Valve type	Actuator type	Spring colour	Pressure range (bar)	PN rating
1	**DRV4(G)B1(N)**	1 or 1N	Yellow	*0.1 - 0.6	2.5
2	**DRV4(G)B2(N)**	2 or 2N	Yellow	**0.2 - 1.2	2.5
3	**DRV4(G)B3(N)**	3 or 3N	Blue	0.8 - 2.5	6.0
4	**DRV4(G)B4(N)**	4 or 4N	Blue	2.0 - 5.0	16.0
5	**DRV4(G)B5(N)**	5 or 5N	Blue	4.5 - 10.0	25.0
6	**DRV4(G)B6(N)**	5 or 5N	Red	8.0 - 20.0	25.0

* DN32 to DN50 Range 0.15 - 0.6, DN65 to DN100 Range 0.3 - 0.6

** DN65 to DN100 Range 0.4 - 1.2.

Sizes and pipe connections

DN15, DN20, DN25, DN32, DN40, DN50, DN65, DN80 and DN100 Flanged EN 1092 PN40.
JIS and ASME 150 and ASME 300 flanges are also available on request.

Certification

This product is available with certification to EN 10204 3.1.
Note : All certification/inspection requirements must be stated at the time of order placement.

Kvs values

Size DN	15	20	25	32	40	50	65	80	100
Kvs	3.4	6.5	11.4	16.4	24	40	58	92	145

Note: The Kvs values shown above are full capacities and should be used for safety valve sizing purposes where they are required.

SHOPVALVES
GLOBAL VALVE SOLUTIONS | 阀门易购

SHOPVALVES
GLOBAL VALVE SOLUTIONS | 阀门易购

Pressure/temperature limits

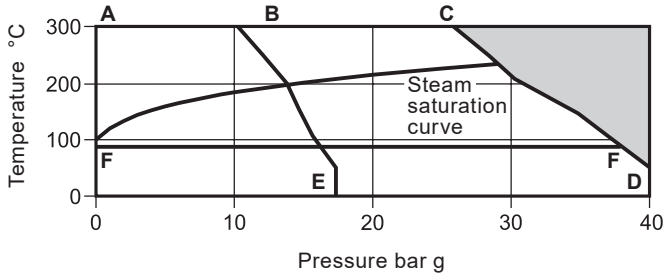

The product **must not** be used in this region.

A-C-D Flanged EN 1092 PN40 and ASME 300.

A-B-E Flanged ASME 150.

F-F The DRV4G is limited to 90 °C.

Body design conditions		PN40
Maximum design pressure		40 bar g @ 50 °C
Maximum design temperature	**DRV4**	300 °C @ 25.8 bar g
	DRV4G	90 °C @ 37.3 bar g
Minimum design temperature		0 °C
Maximum operating temperature	**DRV4**	300 °C @ 25.8 bar g
	DRV4G	90 °C @ 37.3 bar g
Minimum operating temperature **Note:** For lower operating temperatures consult Spirax Sarco		0 °C
Maximum differential pressure	**DN15 - DN50**	25 bar
	DN65 - DN100	20 bar
Designed for a maximum cold hydraulic test pressure of		60 bar g
Note: With internals fitted, test pressure must not exceed		40 bar g

SHOPVALVES
GLOBAL VALVE SOLUTIONS | 阀门易购

SHOPVALVES
GLOBAL VALVE SOLUTIONS | 阀门易购

Materials

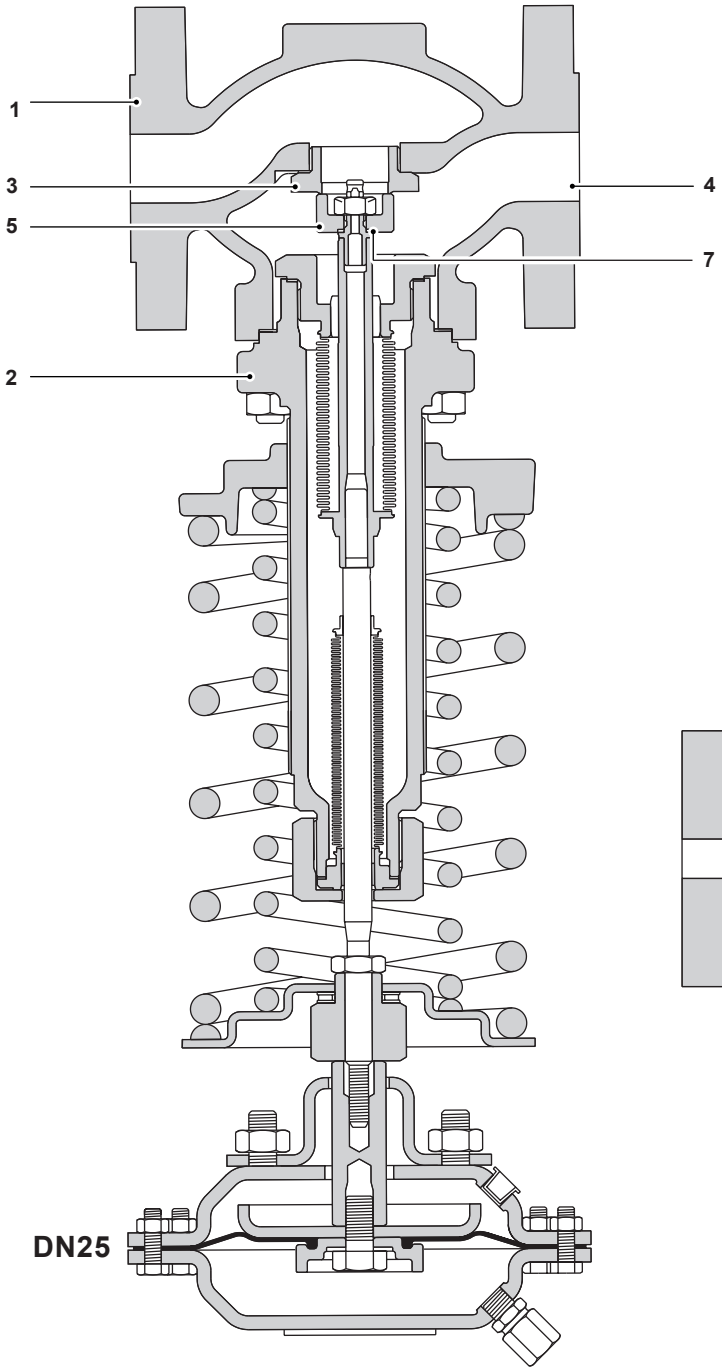

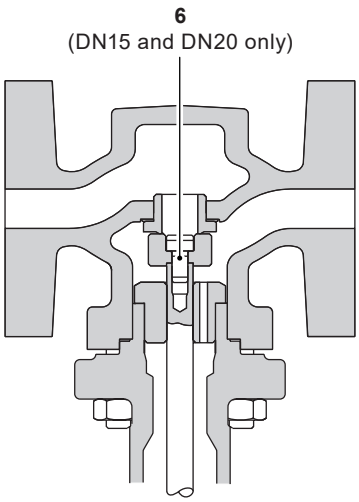

DN15 and DN20

No.	Part		Material	
1	Body		Cast steel	GP 240 GH
2	Bonnet		Cast steel	DIN 17425 GS C25
3	Valve seat		Stainless steel	BS 970 431 S29
4	Seat gasket	DN15	Stainless steel	
		DN20 and DN25	Mild steel	
		DN32 to DN50	Reinforced exfoiliated graphite	
5	Valve head	DRV4	Stainless steel	BS 970 431 S29
		DRV4G (soft seated)	Stainless steel/Nitrile	BS 970 431 S29
6	Valve head screw	DN15 and DN20	Stainless steel	BS 6105 A2
7	Valve head seal		Arlon 1555	

SHOPVALVES
GLOBAL VALVE SOLUTIONS | 阀门易购

SHOPVALVES
GLOBAL VALVE SOLUTIONS | 阀门易购

Materials
(continued)

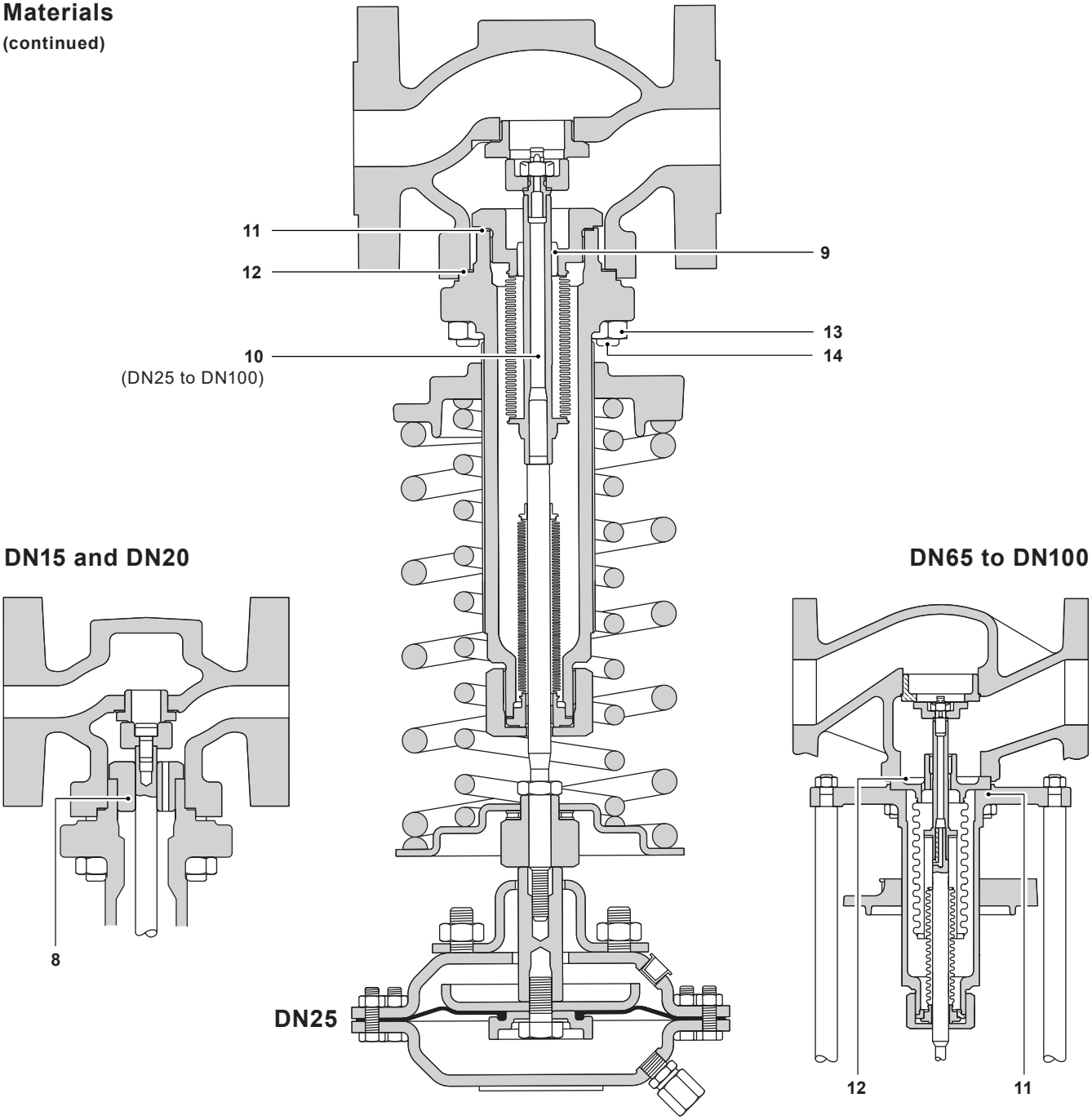

No.	Part			Material	
8	Bush	DN15 and DN20		Stainless steel	BS 970 431 S29
9	Bush (part of item 10)	DN25 to DN100		Stainless steel	BS 970 431 S29
10	Balancing bellows assembly	DN25 to DN100		Stainless steel	AISI 316 (L)
11	Balancing bellows gasket	DN25 to DN100		Reinforced exfoiliated graphite	
12	Bonnet gasket			Reinforced exfoiliated graphite	
13	Bonnet nuts			Steel	DIN 267 Pt13 Gr. 8
14	Bonnet studs	DN15 to DN40	M10	Steel	DIN 267 Pt13 Gr. 8.8
		DN50 and DN65	M12		
		DN80 and DN100	M16		

Materials continued on next page

SHOPVALVES
GLOBAL VALVE SOLUTIONS | 阀门易购

SHOPVALVES
GLOBAL VALVE SOLUTIONS | 阀门易购

Materials
(continued)

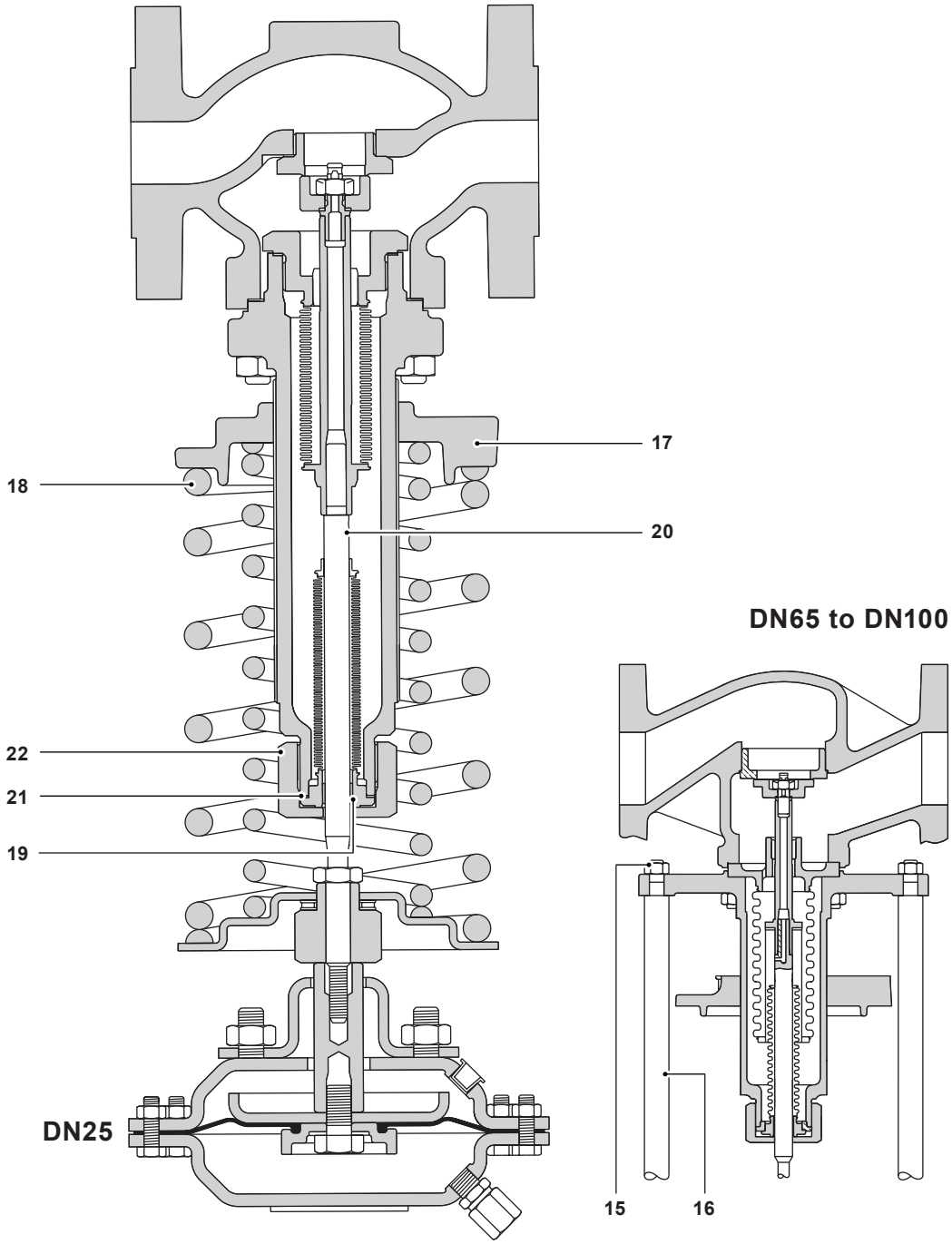

No.	Part		Material	
15	Pillars		Steel zinc plated	BS 970 230 M07
16	Pillars nuts		Steel zinc plated	BS 3693 Gr. 8
17	Spring adjuster		Cast iron zinc plated	DIN 1691 GG 25
18	Spring(s)		Chrome Vanadium	
19	Bush (part of 20)		PTFE/steel composite	
20	Sealing bellows assembly		Stainless steel	AISI 316(L)
21	Sealing bellows gasket	DN15 and DN20	Stainless steel 'S' type	
		DN25 to DN100	Reinforced exfoiliated graphite	
22	Clamp nut	DN25 to DN100	Steel zinc plated	BS 970 230 M07

Materials continued on next page

SHOPVALVES
GLOBAL VALVE SOLUTIONS | 阀门易购

SHOPVALVES
GLOBAL VALVE SOLUTIONS | 阀门易购

Materials
(continued)

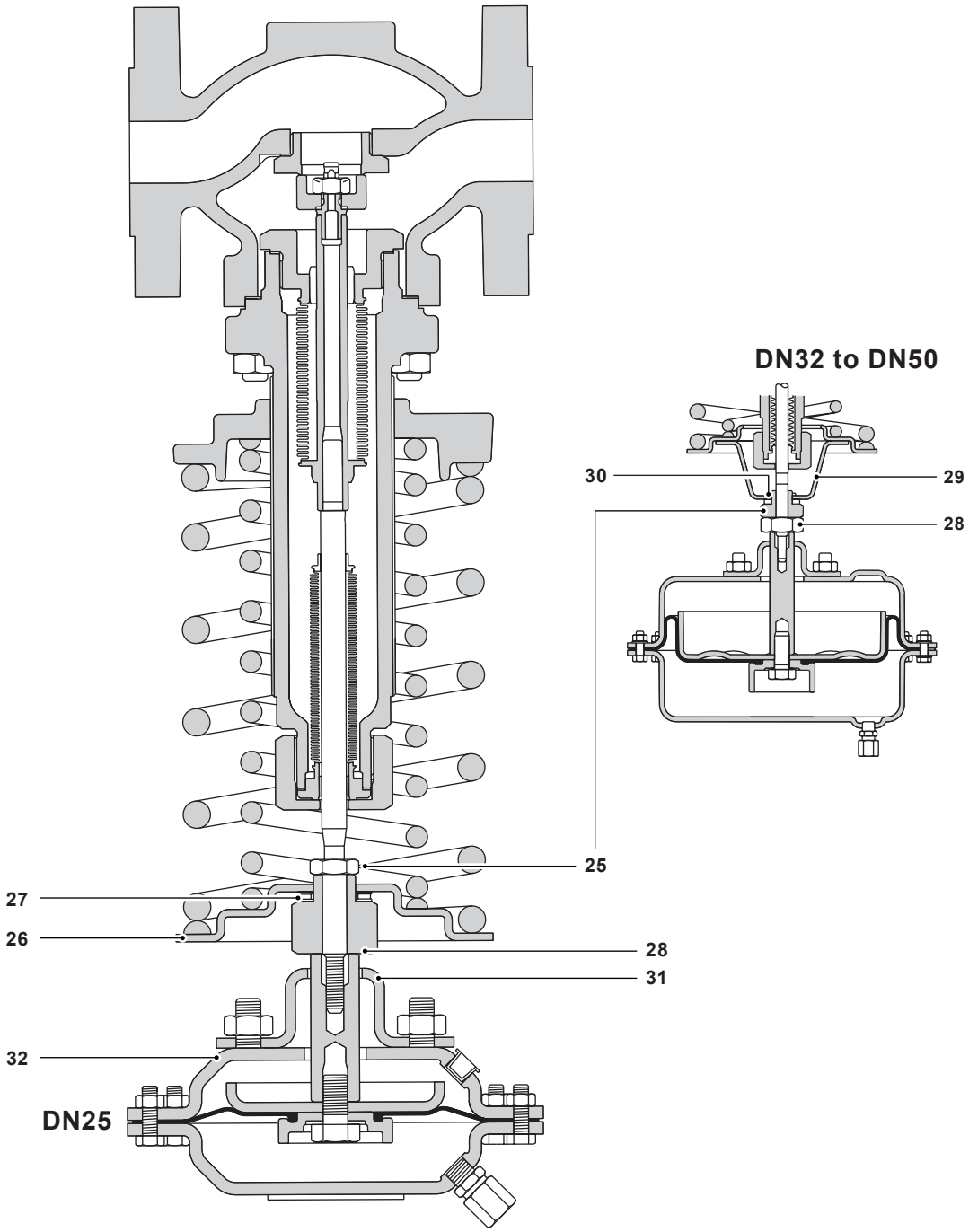

No.	Part		Material	
25	Lock-nut	DN32 to DN50	Steel zinc plated	BS 970 230 M07
		DN15 to DN25, DN65 to DN100	Steel zinc plated	BS 3692 Gr. 8
26	Spring plate		Steel zinc plated	BS 1449 Pt1 HR14
27	Needle bearing		Steel	
28	Setting nut		Steel zinc plated	BS 970 230 M07
29	Bearing plate	DN32 to DN50	Steel zinc plated	BS 1449 Pt1 HR14
30	Circlip	DN32 to DN50	Steel zinc plated	
31	Mounting plate		Steel zinc plated	BS 1449 Pt1 HR14
32	Housing	Types 1(N) to 4(N)	Steel	DIN 1514 St W24

Materials continued on next page

SHOPVALVES
GLOBAL VALVE SOLUTIONS | 阀门易购

SHOPVALVES
GLOBAL VALVE SOLUTIONS | 阀门易购

Materials
(continued)

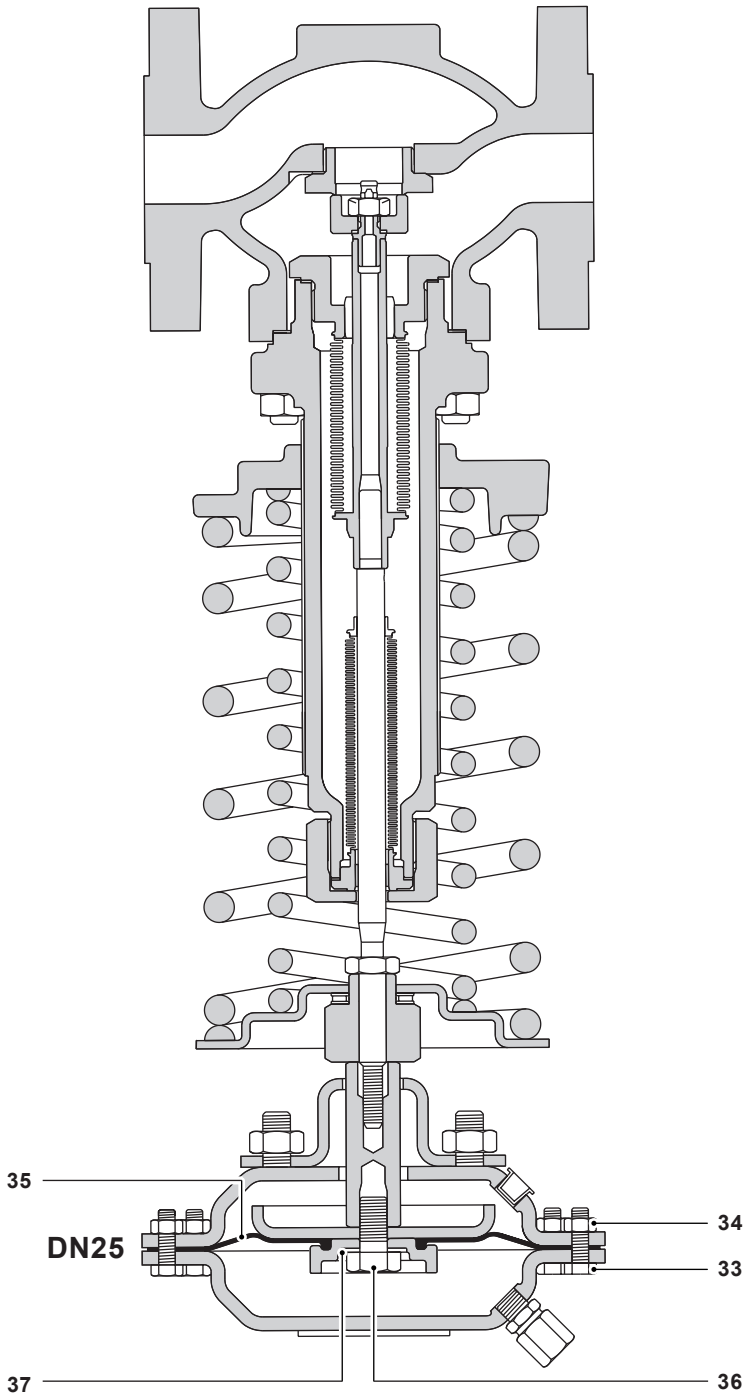

No.	Part		Material	
33	Housing screws	Type 5(N)	Steel	BS EN 10025 S355 J2G3
		Types 1(N)	Steel zinc plated	BS 3692 Gr. 5.6
		Types 2(N), 3(N), 4(N) and 5(N)	Steel zinc plated	BS 3692 Gr. 8.8
34	Housing nuts	Types 1(N)	Steel zinc plated	BS 3692 Gr. 5
		Types 2(N), 3(N), 4(N) and 5(N)	Steel zinc plated	BS 3692 Gr. 8
35	Diaphragm		EPDM fabric reinforced	
	Diaphragm suffix 'N'		Nitrile fabric reinforced	
36	Hex. headed bolt		Stainless steel	BS 6105 A2
37	Sealing washer		Fibre	

Materials continued on next page

SHOPVALVES
GLOBAL VALVE SOLUTIONS | 阀门易购

SHOPVALVES
GLOBAL VALVE SOLUTIONS | 阀门易购

Materials
(continued)

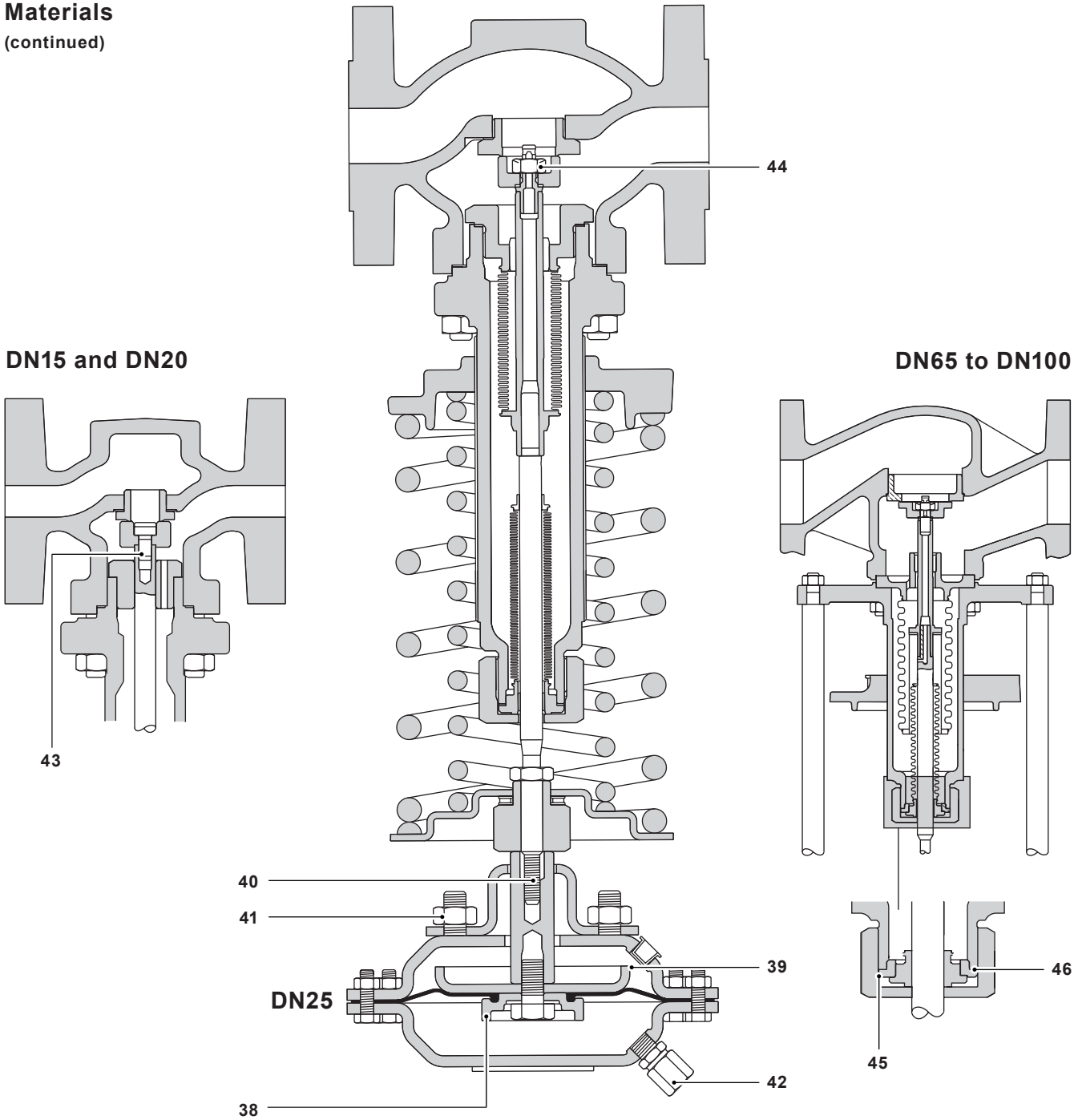

No.	Part		Material	
38	Diaphragm clamp		Stainless steel	ASTM A351 CF8M
39	Piston		Steel zinc plated	BS 1449 Pt1 HR14
40	Spindle		Steel zinc plated	BS 970 230 M07
41	Mounting nuts		Steel zinc plated	BS 3692 Gr. 8
42	Coupling		Steel zinc plated	
43	Thread insert	DN15 and DN20	Stainless steel	DTD 734
44	Self-locking nut	DN25 to DN100	Stainless steel	BS 6105 A2
45	Clamp plate	DN65 to DN100	Stainless steel	ASTM A276 316L
46	Clamp plate gasket	DN65 to DN100	Reinforced exfoliated graphite	

SHOPVALVES
GLOBAL VALVE SOLUTIONS | 阀门易购

SHOPVALVES
GLOBAL VALVE SOLUTIONS | 阀门易购

Dimensions (approximate) in millimetres

DRV with Type 1/1N or Type 2/2N actuator

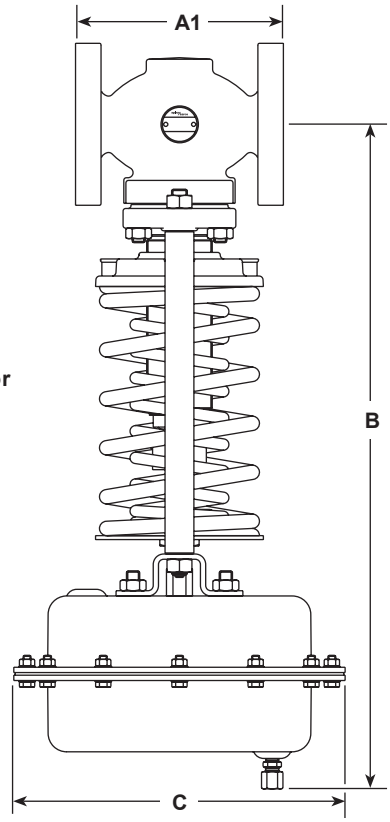

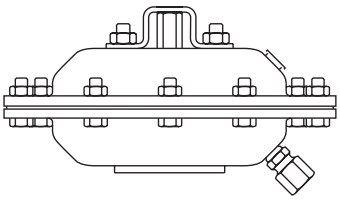

Type 3/3N and 4/4N actuator arrangement

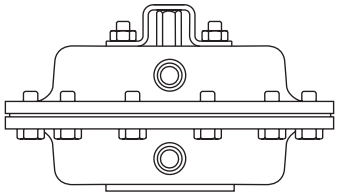

Type 5/5N actuator arrangement

Size	EN 1092 PN40 A1	Flanged ASME 300 A1	ASME 150 A1	Actuator type 1 B	1 C	2 B	2 C	3 B	3 C	4 B	4 C	5 + 6 B	5 + 6 C
DN15	130	130	124	537	305	511	250	426	208	426	168	411	143
DN20	150	150	143	537	305	511	250	426	208	426	168	411	143
DN25	160	162	153	546	305	520	250	435	208	435	168	420	143
DN32	180	181	176	608	305	582	250	497	208	497	168	482	143
DN40	200	203	198	608	305	582	250	497	208	497	168	482	143
DN50	230	233	229	611	305	585	250	500	208	500	168	485	143
DN65	290	297	295	633	305	607	250	522	208	522	168	507	143
DN80	310	319	314	639	305	613	250	528	208	528	168	513	143
DN100	350	366	350	744	305	718	250	633	208	633	168	618	143

SHOPVALVES
GLOBAL VALVE SOLUTIONS | 阀门易购

SHOPVALVES
GLOBAL VALVE SOLUTIONS | 阀门易购

Valve weight (kg)

Valve size	DN15	DN20	DN25	DN32	DN40	DN50	DN65	DN80	DN100
Yellow spring	11	12.4	14.6	19.8	21.2	25.2	35.5	41.3	58.3
Blue spring	11	12.4	14.6	19.8	21.2	25.2	35.5	41.3	58.3
Red spring	12	13.4	15.6	21.2	22.6	26.6	37.3	43.1	60.9

Actuator weight (kg)

Actuator type	1 or 1N	2 or 2N	3 or 3N	4 or 4N	5 or 5N
Weight	12.3	6.5	3.9	2.5	2.6

Note:
To calculate the total product weight add the valve and actuator weights together.

Safety information, installation and maintenance

For full details see the Installation and Maintenance Instructions (IM-S12-04) supplied with the product.

Installation note:
Caution - To protect the actuator diaphragm on steam applications a WS4 series water seal pot must be installed in the downstream pressure signal line to the actuator. Refer to TI-S12-03 for details.
The valve should be mounted vertically downwards in a horizontal pipeline with the direction of flow as indicated by the arrow on the valve body. For applications with downstream temperatures below 125 °C the valve can alternatively be mounted vertically upwards.

How to order

Example: 1 off Spirax Sarco DN40 DRV4B3 direct acting pressure reducing valve flanged PN40.
Note: Add suffix 'N' if the Nitrile rubber diaphragm is required. i.e. DRV4B3N.

SHOPVALVES
GLOBAL VALVE SOLUTIONS | 阀门易购

SHOPVALVES
GLOBAL VALVE SOLUTIONS | 阀门易购

Spare parts for the DN15 and DN20 valves

The spare parts available for sizes DN15 and DN20 valves are detailed below. No other parts are supplied as spares.

The listed parts are for the following valve types:

Valve assemblies	DRV4	Stainless steel seated
	DRV4G	Nitrile soft seated
Actuator assemblies	Types 1 to 5	EPDM diaphragm
	Types 1N to 5N	Nitrile diaphragm

Available spares

Coupling		**A**
Diaphragm set	Diaphragm and sealing washer.	**B**, **C**
Needle bearing		**D**
Sealing bellows set	Sealing bellows assembly, sealing bellows gasket and bonnet gasket.	**E**, **F**, **G**
Control spring(s)		**I**
Seat/head set	Seat, seat gasket, head, bonnet gasket and head seal.	**J**, **K**, **L**, **G**, **H**
Gasket set	Sealing bellows gasket, bonnet gasket and seat gasket.	**F**, **G**, **K**

How to order spares

Always order spares by using the description given in the column headed 'Available spares' and state the size and type of valve.

Example: 1 - Gasket set for a Spirax Sarco DN15 DRV4B1 pressure reducing valve.

How to fit spares

Full fitting instructions are given in the Installation and Maintenance Instructions supplied with the spare(s).

SHOPVALVES
GLOBAL VALVE SOLUTIONS | 阀门易购

SHOPVALVES
GLOBAL VALVE SOLUTIONS | 阀门易购

DN15 to DN20

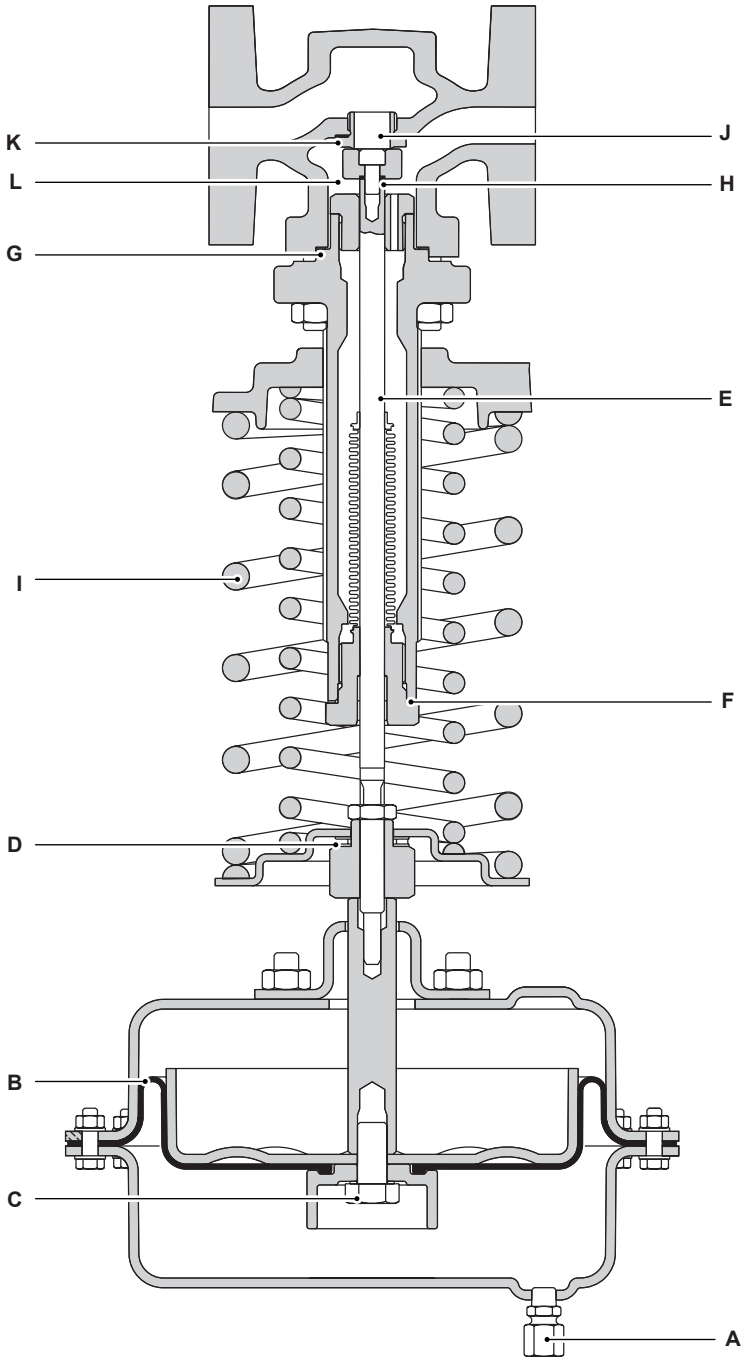

SHOPVALVES
GLOBAL VALVE SOLUTIONS | 阀门易购

SHOPVALVES
GLOBAL VALVE SOLUTIONS | 阀门易购

Spare parts for the DN25 to DN100 valves

The spare parts available for sizes DN25 to DN100 valves are detailed below. No other parts are supplied as spares.

The listed parts are for the following valve types:

Valve assemblies	DRV4	Stainless steel seated
	DRV4G	Nitrile soft seated
Actuator assemblies	Types 1 to 5	EPDM diaphragm
	Types 1N to 5N	Nitrile diaphragm

Available spares

Coupling			**A**
Diaphragm set		Diaphragm and sealing washer.	**B**, **C**
Needle bearing			**D**
Sealing bellows set DN65 to DN100.		Sealing bellows assembly, sealing bellows gasket, and clamp plate gasket	**E**, **F**, **R**
Control spring(s)			**I**
Seat/head set	**DN25 to DN50**	Seat, seat gasket, head, self-locking nut, head seal and bonnet gasket.	**J**, **K**, **L**, **W**, **H**, **G**
Head set	**DN65 to DN100**	Head, self-locking nut, head seal, bonnet gasket and balancing bellows gasket.	**L**, **W**, **H**, **G**, **M**
Balancing bellows set	**DN25 to DN50**	Balancing bellows assembly, balancing bellows gasket, bonnet gasket, head seal, self-locking nut, and sealing bellows gasket.	**N**, **M**, **G**, **H**, **W**, **F**
	DN65 to DN100	Balancing bellows assembly, balancing bellows gasket, bonnet gasket, self-locking nut and head seal.	**N, M, G, W, H**
Gasket set	**DN25 to DN50**	Sealing bellows gasket, bonnet gasket, seat gasket and balancing bellows gasket.	**F, G, K, M**
	DN65 to DN100	Sealing bellows gasket, bonnet gasket, balancing bellows gasket and clamp plate gasket.	**F, G, M, R**

How to order spares

Always order spares by using the description given in the column headed 'Available spares' and state the size and type of valve.

Example: 1 - Gasket set for a Spirax Sarco DN25 DRV4B1 pressure reducing valve.

How to fit spares

Full fitting instructions are given in the Installation and Maintenance Instructions supplied with the spare(s).

SHOPVALVES
GLOBAL VALVE SOLUTIONS | 阀门易购

SHOPVALVES
GLOBAL VALVE SOLUTIONS | 阀门易购

DN25 to DN50

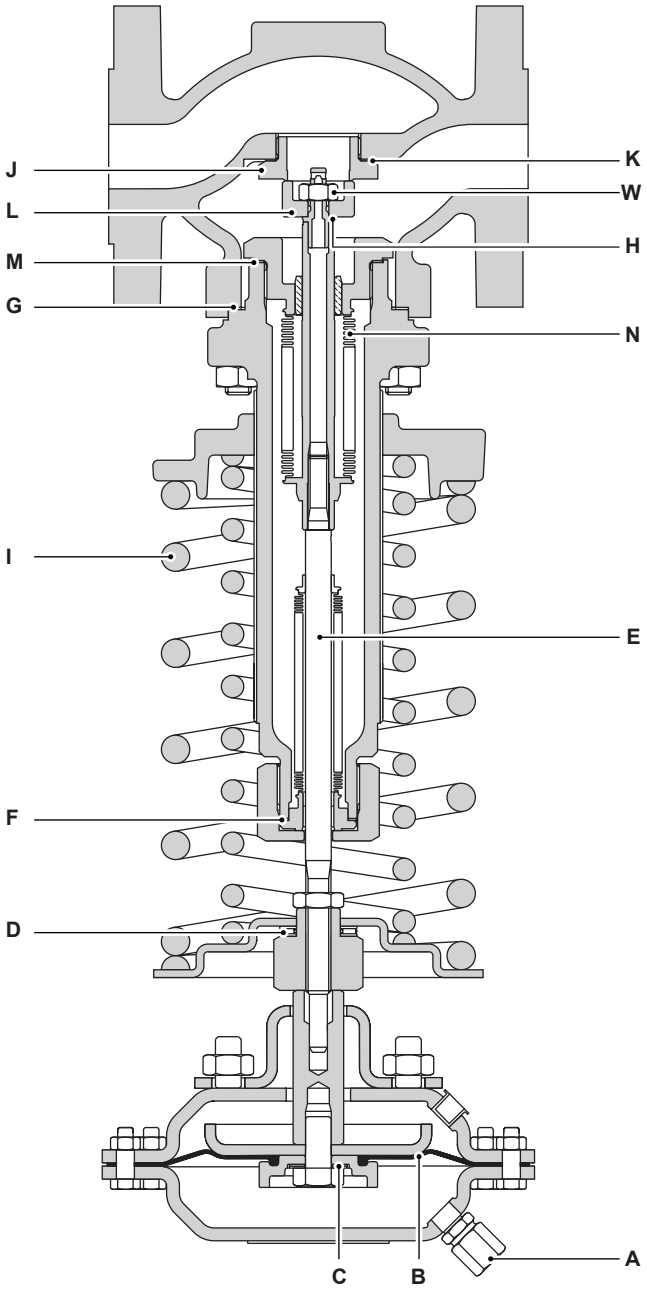

DN65 to DN100

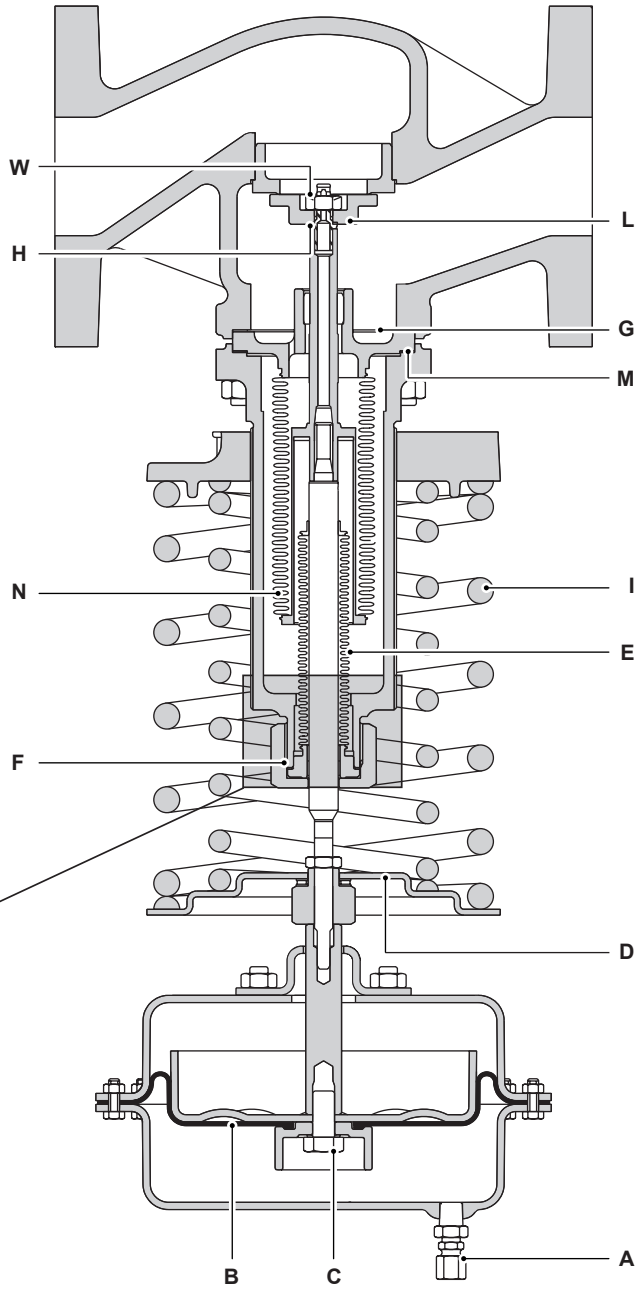

DN65 to DN100

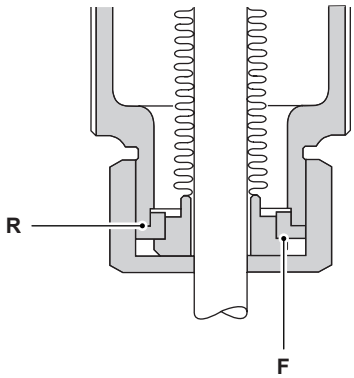

SHOPVALVES
GLOBAL VALVE SOLUTIONS | 阀门易购