SHOPVALVES
GLOBAL VALVE SOLUTIONS | 阀门易购

2020050/13

IM-S12-04
CTLS Issue 13

spirax sarco

# DRV and DRVG
# Pressure Reducing Valves
## Installation and Maintenance Instructions

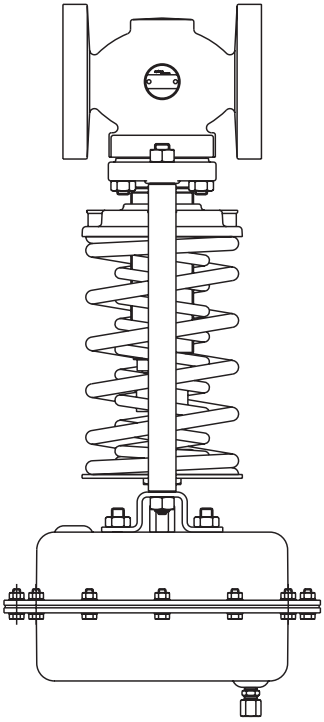

1. Safety information
2. General product information
3. Installation
4. Maintenance
5. Spare parts
6. Fault finding



© Copyright 2021

Printed in GB

SHOPVALVES
GLOBAL VALVE SOLUTIONS | 阀门易购

SHOPVALVES
GLOBAL VALVE SOLUTIONS | 阀门易购



SHOPVALVES
GLOBAL VALVE SOLUTIONS | 阀门易购

SHOPVALVES
GLOBAL VALVE SOLUTIONS | 阀门易购

# 1. Safety information

**Safe operation of the unit can only be guaranteed if it is properly installed, commissioned and maintained by a qualified person (see Section 1.11) in compliance with the operating instructions. General installation and safety instructions for pipeline and plant construction, as well as the proper use of tools and safety equipment must also be complied with.**

## Warning

**Care should be excercised when handling gaskets since the stainless steel reinforcing strip can easily inflict cuts.**

## 1.1 Intended use

**Referring to the Installation and Maintenance Instructions, name-plate and Technical Information Sheet, check that the product is suitable for the intended use/application. The products listed below comply with the requirements of the EU Pressure Equipment Directive/UK Pressure Equipment (Safety) Regulations and carry the CE mark when so required.**

**The products fall within the following Pressure Equipment Directive categories:**

| Product | | Group 1 gases | Group 2 gases | Group 1 liquids | Group 2 liquids |
|---|---|---|---|---|---|
| DRV4 and DRV4G | DN15 - DN32 | - | SEP | - | SEP |
| | DN40 - DN100 | 1 | - | SEP | |
| DRV7 and DRV7G | DN15 - DN40 | - | SEP | - | SEP |
| | DN50 - DN100 | 1 | - | SEP | |
| WS4 | | - | SEP | - | SEP |
| WS4-3 | | - | 1 | - | SEP |

i) The products have been specifically designed for use on steam, water, compressed air, inert industrial gases and certain oils which are in Group 2 of the above mentioned Pressure Equipment Directive. The product's use on other fluids may be possible but, if this is contemplated, Spirax Sarco should be contacted to confirm the suitability of the product for the application being considered.

ii) Check material suitability, pressure and temperature and their maximum and minimum values. If the maximum operating limits of the product are lower than those of the system in which it is being fitted, or if malfunction of the product could result in a dangerous overpressure or overtemperature occurrence, ensure a safety device is included in the system to prevent such over-limit situations.

iii) Determine the correct installation situation and direction of fluid flow.

Note: In the case of liquid service, this product is to be used only on intermittant duty. Applications such as continuous pump recirculation may cause valve and pipework damage due to cavitation which is not covered under the terms of our warranty.

iv) Spirax Sarco products are not intended to withstand external stresses that may beinduced by any system to which they are fitted. It is the responsibility of the installer to consider these stresses and take adequate precautions to minimise them.

v) Remove protection covers from all connections and protective film from all name-plates, where appropriate, before installation on steam or other high temperature applications.



SHOPVALVES
GLOBAL VALVE SOLUTIONS | 阀门易购

SHOPVALVES
GLOBAL VALVE SOLUTIONS | 阀门易购

## 1.2 Access

Ensure safe access and if necessary a safe working platform (suitably guarded) before attempting to work on the product. Arrange suitable lifting gear if required.

## 1.3 Lighting

Ensure adequate lighting, particularly where detailed or intricate work is required.

## 1.4 Hazardous liquids or gases in the pipeline

Consider what is in the pipeline or what may have been in the pipeline at some previous time. Consider; flammable materials, substances hazardous to health, extremes of temperature.

## 1.5 Hazardous environment around the product

Consider; explosion risk areas, lack of oxygen (e.g. tanks, pits), dangerous gases, extremes of temperature, hot surfaces, fire hazard (e.g. during welding), excessive noise, moving machinery.

## 1.6 The system

Consider the effect on the complete system of the work proposed. Will any proposed action (e.g. closing isolation valves, electrical isolation) put any other part of the system or any personnel at risk?
Dangers might include isolation of vents or protective devices or the rendering ineffective of controls or alarms. Ensure isolation valves are turned on and off in a gradual way to avoid system shocks.

## 1.7 Pressure systems

Ensure that any pressure is isolated and safely vented to atmospheric pressure. Consider double isolation (double block and bleed) and the locking or labelling of closed valves. Do not assume that the system has depressurised even when the pressure gauge indicates zero.

## 1.8 Temperature

Allow time for temperature to normalise after isolation to avoid danger of burns and consider whether protective clothing (inlcuding safety glasses) is required.

### PTFE components

If components made from PTFE have been subjected to a temperature approaching 260 °C or higher, they will give off toxic fumes, which if inhaled are likely to
cause temporary discomfort. It is essential for a no smoking rule to be enforced in all areas where PTFE is stored, handled or processed as persons inhaling the fumes from burning tobacco contaminated with PTFE particles can develop 'polymer fume fever'.

## 1.9 Tools and consumables

Before starting work ensure that you have suitable tools and/or consumables available. Use only genuine Spirax Sarco replacement parts.


SHOPVALVES
GLOBAL VALVE SOLUTIONS | 阀门易购

SHOPVALVES
GLOBAL VALVE SOLUTIONS | 阀门易购

## 1.10 Protective clothing

Consider whether any protective clothing is required by yourself and/or others in the vicinity to protect against the hazards of, for example, chemicals, high/low temperature, noise, falling objects, and dangers to eyes and face.

## 1.11 Permits to work

All work must be carried out or be supervised by a suitably competent person.
Installation and operating personnel should be trained in the correct use of the product according to these instructions.
Where a formal 'permit to work' system is in force it must be complied with. Where there is no such system, it is recommended that a responsible person should know what work is going on and, where necessary, arrange to have an assistant whose primary responsibility is safety.
Post 'warning notices' if necessary.

## 1.12 Handling

Manual handling of large and/or heavy products may present a risk of injury. Lifting, pushing, pulling, carrying or supporting a load by bodily force can cause injury particularly to the back. You are advised to assess the risks taking into account the task, the individual, the load and the working environment and use the appropriate handling method depending on the circumstances of the work being done.

### PTFE components

Within its working temperature range PTFE is a completely inert material, but when heated to its sintering temperature it gives rise to gaseous decomposition products or fumes which can produce unpleasant side effects if inhaled. Smoking should be prohibited in workshops where PTFE is handled because tobacco contaminated with PTFE will give rise to polymer fumes when burnt. It is therefore important to avoid contamination of clothing, especially the pockets, with PTFE and to maintain a reasonable standard of cleanliness by washing hands and removing PTFE particles lodged under the fingernails.

## 1.13 Residual hazards

In normal use the external surface of the product may be very hot. If used at the maximum permitted operating conditions the surface temperature of some products may reach temperatures in excess of 300 °C.
Many products are not self-draining. Take due care when dismantling or removing the product from an installation (refer to 'Maintenance instructions').

## 1.14 Freezing

Provision must be made to protect products which are not self-draining against frost damage if they are inoperative in environments where they may be exposed to temperatures below freezing point.


SHOPVALVES
GLOBAL VALVE SOLUTIONS | 阀门易购

SHOPVALVES
GLOBAL VALVE SOLUTIONS | 阀门易购

## 1.15 Disposal

**This product is recyclable. No ecological hazard is anticipated with the disposal of this product providing due care is taken, except:**

### PTFE components:

- **Can only be disposed of by approved methods, not incineration.**
- **Keep PTFE waste in a separate container, do not mix it with other rubbish, and consign it to a landfill site.**

## 1.16 Returning products

**Customers and stockists are reminded that under EC Health, Safety and Environment Law, when returning products to Spirax Sarco they must provide information on any hazards and the precautions to be taken due to contamination residues or mechanical damage which may present a health, safety or environmental risk. This information must be provided in writing including Health and Safety data sheets relating to any substances identified as hazardous or potentially hazardous.**

**Warning**
**If this product is not used in the manner specified by this IMI, then the protection provided may be impaired.**


SHOPVALVES
GLOBAL VALVE SOLUTIONS | 阀门易购

SHOPVALVES
GLOBAL VALVE SOLUTIONS | 阀门易购

# 2. General product information

## 2.1 Description

The DRV pressure reducing valve is a direct acting self-powered valve of robust construction, designed to operate under arduous conditions being ideal for steam, air, inert gas and liquid systems.
A Nitrile rubber soft seated version (suffix 'G') is available for air/gas applications that require tight shut-off (limited to 90 °C). It is recommended that for these applications, a maximum pressure turndown ratio of 10:1 is observed.

The valve is controlled by the downstream pressure acting directly on to a diaphragm to oppose a 'set' spring force.

Under stable conditions diaphragm force and spring force are in a state of balance, but an increase or decrease in demand raises or lowers the downstream pressure which in turn acts against the spring to close or open the valve to adjust the flowrate and maintain a constant downstream pressure. The DRV is 'routine' maintenance free. It is a single seat, bellows sealed valve available in sizes ranging from DN15 to DN100 flanged with downstream pressure ranges of between 0.1 bar to 20 bar.

**Note:** In the case of liquid service, this product is to be used only on intermittant duty. Applications such as continuous pump recirculation may cause valve and pipework damage due to cavitation which is not covered under the terms of our warranty.

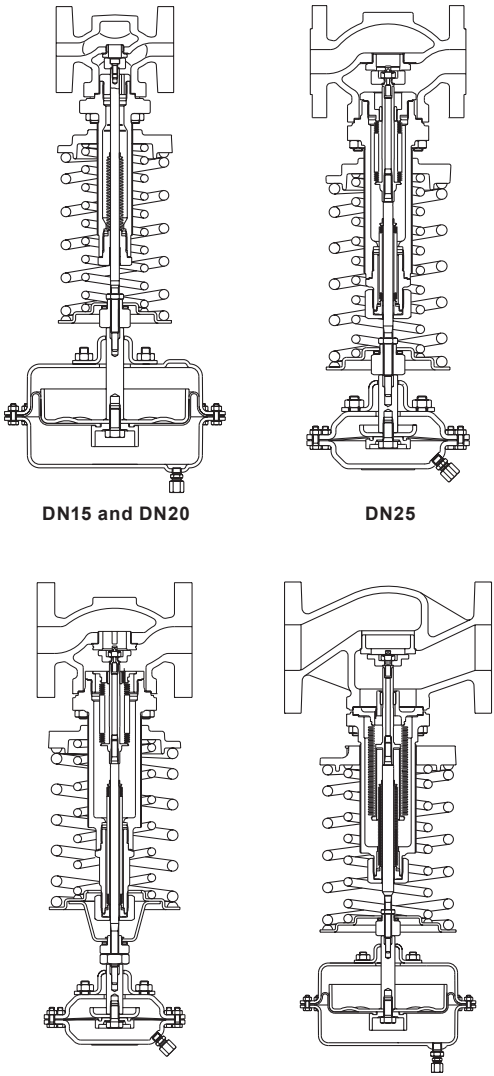


**Fig. 1**
**Cross sectional views of the DRV range of pressure reducing valves**


SHOPVALVES
GLOBAL VALVE SOLUTIONS | 阀门易购

SHOPVALVES
GLOBAL VALVE SOLUTIONS | 阀门易购

## 2.2 DRV nomenclature/selection

| | | | | |
|---|---|---|---|---|
| **Connection sizes** | DN15, DN20, DN25, DN32, DN40, DN50, DN65, DN80 and DN100 | | | DN25 |
| **Type** | DRV | = | Direct acting pressure reducing valve | DRV |
| **Body material** | 4 | = | Cast steel | 4 |
| | 7 | = | SG iron | |
| **Option** | G | = | Soft seated | |
| **Stem seal** | B | = | Bellows | B |
| **Downstream pressure range (Actuator type/ spring colour)** | * 1 | = | 0.1 - 0.6 bar (Type 1 (N)/Yellow) | 4 |
| | ** 2 | = | 0.2 - 1.2 bar (Type 2 (N)/Yellow) | |
| | 3 | = | 0.8 - 2.5 bar (Type 3 (N)/Blue) | |
| | 4 | = | 2.0 - 5.0 bar (Type 4 (N)/Blue) | |
| | 5 | = | 4.5 - 10 bar (Type 5 (N)/Blue) | |
| | 6 | = | 8.0 - 20 bar (Type 5 (N)/Red) | |
| **Option** | N | = | Nitrile diaphragm | - |
| **Connection type** | Flanged | = | PN16/PN25/ANSI 150/ANSI 300/JIS 20 | PN25 |
| **Water seal pot (if required)** | WS4 or WS4-3 | connection options | BSP | WS4 (BSP) |
| | | | NPT | |
| | | | Butt weld | |

| | | | | | | | | |
|---|---|---|---|---|---|---|---|---|
| **Selection example** | DN25 | DRV | 4 | - | B | 4 | PN25 | WS4 (BSP) |

* DN32 to DN50 Range 0.15 - 0.6 bar

* DN65 to DN100 Range 0.30 - 0.6 bar

** DN65 to DN100 Range 0.40 - 1.2 bar

**How to order example:** DN25 DRV4B4, EN 1092 PN40, plus WS4 (BSP) water seal pot.



SHOPVALVES
GLOBAL VALVE SOLUTIONS | 阀门易购

SHOPVALVES
GLOBAL VALVE SOLUTIONS | 阀门易购

## 2.3 Technical details

| | | | | |
|---|---|---|---|---|
| **Available types** | DRV4 and DRV4G | Cast steel | Flanged | DN15 to DN100 |
| | DRV7 and DRV7G | SG iron | Flanged | DN15 to DN100 |
| **Valve types** | Plug balanced design | | | DN15 and DN20 |
| | Fully balanced design | | | DN25 to DN100 |
| **Connection types** | Flanged EN 1092 PN16, PN25 and PN40 (JIS and ANSI also available on request) | | | |

### Downstream pressure range and actuator housing PN rating

Note: The maximum actuator continuous working temperature with EPDM diaphragm 125 °C, with Nitrile diaphragm 90 °C.

| Range | Pressure (bar) | Spring colour | Actuator type | PN rating |
|---|---|---|---|---|
| **1 *** | 0.1 to 0.6 | Yellow | 1 and 1N | 2.5 |
| **2 **** | 0.2 to 1.2 | Yellow | 2 and 2N | 2.5 |
| **3** | 0.8 to 2.5 | Blue | 3 and 3N | 6.0 |
| **4** | 2.0 to 5.0 | Blue | 4 and 4N | 16.0 |
| **5** | 4.5 to 10.0 | Blue | 5 and 5N | 25.0 |
| **6** | 8.0 to 20.0 | Red | 5 and 5N | 25.0 |

* DN32 to DN50 Range 0.15 - 0.6 bar.
** DN65 to DN100 Range 0.40 - 1.2 bar, DN65 to DN100 Range 0.30 - 0.6 bar

## 2.4 $K_{vs}$ values

| Valve size | DN15 | DN20 | DN25 | DN32 | DN40 | DN50 | DN65 | DN80 | DN100 |
|---|---|---|---|---|---|---|---|---|---|
| **Maximum $K_{vs}$** | 3.4 | 6.5 | 11.4 | 16.4 | 24 | 40 | 58 | 92 | 145 |

For conversion:
$C_v$ (UK) = $K_v$ x 0.963
$C_v$ (US) = $K_v$ x 1.156


SHOPVALVES
GLOBAL VALVE SOLUTIONS | 阀门易购

SHOPVALVES
GLOBAL VALVE SOLUTIONS | 阀门易购

## 2.5 DRV4 - Pressure/temperature limits

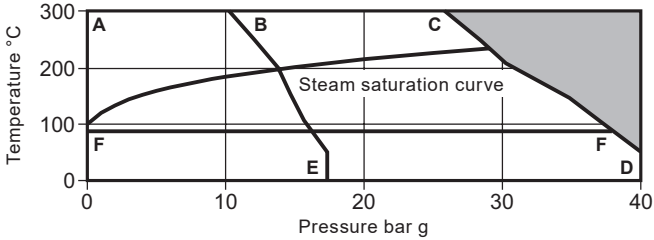


The product **must not** be used in this region.

**A-C-D** Flanged EN 1092 PN40 and ANSI 300.

**A-B-E** Flanged ANSI 150.

**F - F** The DRV4G is limited to 90 °C.

| | | |
|---|---|---|
| Body design conditions | | PN40 |
| Maximum design pressure | | 40 bar g @ 50 °C |
| Maximum design temperature | DRV4 | 300 °C @ 25.8 bar g |
| | DRV4G | 90 °C @ 37.3 bar g |
| Minimum design temperature | | 0 °C |
| Maximum operating temperature | DRV4 | 300 °C @ 25.8 bar g |
| | DRV4G | 90 °C @ 37.3 bar g |
| Minimum operating temperature<br>**Note**: For lower operating temperatures consult Spirax Sarco | | 0 °C |
| Maximum differential pressure | DN15 - DN50 | 25 bar |
| | DN65 - DN100 | 20 bar |
| Designed for a maximum cold hydraulic test pressure of: | | 60 bar g |
| **Note**: With internals fitted, test pressure must not exceed: | | 40 bar g |


SHOPVALVES
GLOBAL VALVE SOLUTIONS | 阀门易购

SHOPVALVES
GLOBAL VALVE SOLUTIONS | 阀门易购

## 2.6 DRV7 - Pressure/temperature limits

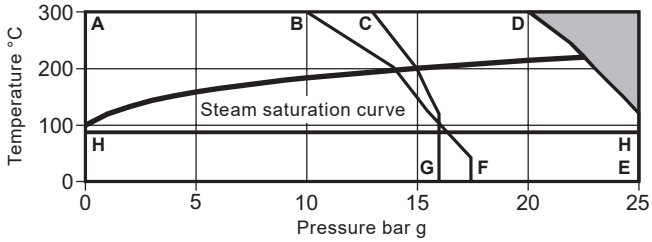


The product **must not** be used in this region.

**A-D-E** Flanged EN 1092 PN25.

**A-C-G** Flanged EN 1092 PN16.

**A-B-F** Flanged ANSI 150.

**H-H** The DRV7G is limited to 90 °C.

| | | |
|---|---|---|
| Body design conditions | | PN25 |
| Maximum design pressure | | 25 bar g @ 100 °C |
| Maximum design temperature | DRV7 | 300 °C @ 17.5 bar g |
| | DRV7G | 90 °C @ 25 bar g |
| Minimum design temperature | | 0 °C |
| Maximum operating temperature | DRV7 | 300 °C @ 17.5 bar g |
| | DRV7G | 90 °C @ 25 bar g |
| Minimum operating temperature<br>**Note**: For lower operating temperatures consult Spirax Sarco | | 0 °C |
| Maximum differential pressure | DN15 - DN50 | 25 bar |
| | DN65 - DN100 | 20 bar |
| Designed for a maximum cold hydraulic test pressure of: | | 38 bar g |
| **Note**: With internals fitted, test pressure must not exceed: | | 25 bar g |



SHOPVALVES
GLOBAL VALVE SOLUTIONS | 阀门易购

SHOPVALVES
GLOBAL VALVE SOLUTIONS | 阀门易购

# 2.7 Water seal pot - WS4/WS4-3 (optional extra)

## Technical details

| | | |
|---|---|---|
| **Available types** | **WS4** | The WS4 is for normal applications up to a volume of 1 litre. |
| | **WS4-3** | The WS4-3 has a larger 3 litre volume and is recommended where there is rapid fluctuation of pressure or load. |

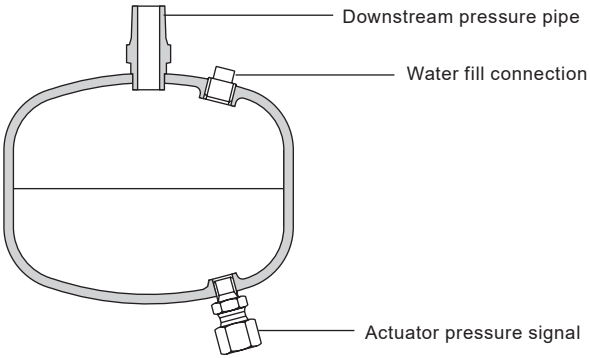


**Fig. 2 Water seal pot - WS4/WS4-3**

## Connection sizes

| | | | |
|---|---|---|---|
| **Inlet** | Screwed | **WS4** | ⅜" BSP Male BS 21 |
| | | | ⅜" NPT Male |
| | Screwed | **WS4-3** | ½" BSP Male BS 21 |
| | | | ½" NPT Male |
| | Butt weld | **WS4** | DN10 |
| | | **WS4-3** | DN15 |
| **Outlet** | Screwed | ⅛" BSP Female BS 21 with 8 mm compression fitting. | |

## Materials

| | |
|---|---|
| **Housing** | Carbon steel |


SHOPVALVES
GLOBAL VALVE SOLUTIONS | 阀门易购

SHOPVALVES
GLOBAL VALVE SOLUTIONS | 阀门易购

## 2.8 Pressure/temperature limits - WS4 / WS4-3

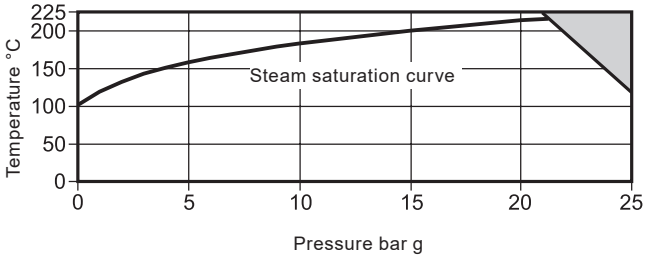


The product **must not** be used in this region.

| | |
|---|---|
| Body design conditions | PN25 |
| Maximum design pressure | 25 bar g @ 120 °C |
| Maximum design temperature | 225 °C @ 21 bar g |
| Minimum design temperature | 0 °C |
| Maximum operating pressure for saturated steam service | 21 bar g |
| Maximum operating temperature | 225 °C @ 21 bar g |
| Minimum operating temperature<br>**Note**: For lower operating temperatures consult Spirax Sarco | 0 °C |
| Maximum differential pressure | 25 bar |
| Designed for a maximum cold hydraulic test pressure of: | 40 bar g |
| **Note**: With internals fitted, test pressure must not exceed: | 25 bar g |


SHOPVALVES
GLOBAL VALVE SOLUTIONS | 阀门易购

SHOPVALVES
GLOBAL VALVE SOLUTIONS | 阀门易购

## 2.9 Materials (continued on page 16)

| No. | Part | | | Material | |
|---|---|---|---|---|---|
| 1 | Body | DRV4 | | Cast steel | DIN 17245 GP 240 GH |
| | | DRV7 | DN15 to DN50 | SG iron | DIN 1693 GGG 40.3 |
| | | | DN65 to DN100 | SG iron | ENG JS 400-18-LT |
| 2 | Bonnet | DRV4 | | Cast steel | DIN 17245 GSC25 |
| | | DRV7 | | SG iron | DIN 1693 GGG 40.3 |
| 3 | Valve seat | | | Stainless steel | BS 970 431 S29 |
| 4 | Gasket | DN15 | | Stainless steel | |
| | | DN20 and DN25 | | Mild steel | |
| | | DN32 to DN50 | | Reinforced exfoliated graphite | |
| 5 | Valve head | DRV4 and DRV7 | | Stainless steel | BS 970 431 S29 |
| | Valve head | DRV4G and DRV7G | | Stainless steel/Nitrile | BS 970 431 S29 |
| 6 | Valve head screw | DN15 and DN20 | | Stainless steel | BS 6105 A2 |
| 7 | Valve head seal | | | Arlon 1555 | |
| 8 | Bush | DN15 and DN20 | | Stainless steel | BS 970 431 S29 |
| 9 | Bush (part of item 10) | DN25 to DN100 | | Stainless steel | BS 970 431 S29 |
| 10 | Balancing bellows assembly | DN25 to DN100 | | Stainless steel | AISI 316L |
| 11 | Balancing bellows gasket | | | Reinforced exfoliated graphite | |
| 12 | Bonnet gasket | | | Reinforced exfoliated graphite | |
| 13 | Bonnet nuts | | | Steel | DIN 267 Pt13 Gr. 8 |
| 14 | Bonnet studs | | | Steel | DIN 267 Pt13 Gr. 8.8 |
| | DN15 to DN25 | M10 | DN32 and DN40 | | M10 |
| | DN50 and DN65 | M12 | DN80 and DN100 | | M16 |
| 15 | Pillars | | | Steel zinc plated | BS 970 230 M07 |
| 16 | Pillar nuts | | | Steel zinc plated | BS 3692 Gr. 8 |
| 17 | Spring adjuster | | | Cast iron zinc plated | DIN 1691 GG25 |
| 18 | Spring(s) | | | Chrome vanadium | |
| 19 | Bush (part of Item 20) | | | PTFE/steel composite | |
| 20 | Sealing bellows assembly | | | Stainless steel | AISI 316L |
| 21 | Sealing bellows gasket | DN15 and DN20 | | Stainless steel 'S' type | |
| | | DN25 to DN100 | | Reinforced exfoliated graphite | |
| 22 | Clamp nut | DN25 to DN100 | | Steel zinc plated | BS 970 230 M07 |
| 23 | Adaptor | | | Stainless steel | BS 970 431 S29 |
| 24 | Adaptor gasket | DN25 to DN50 | | Reinforced exfoliated graphite | |
| 25 | Lock-nut | DN15 to DN25 | | Steel zinc plated | BS 3692 Gr. 8 |
| | | DN32 to DN50 | | Steel zinc plated | BS 970 230 M07 |
| | | DN65 to DN100 | | Steel zinc plated | BS 3692 Gr. 8 |
| 26 | Spring plate | | | Steel zinc plated | BS 1449 Pt 1 HR14 |
| 27 | Needle bearing | | | Steel | |
| 28 | Setting nut | | | Steel zinc plated | BS 970 230 M07 |
| 29 | Bearing plate | DN32 to DN50 | | Steel zinc plated | BS 1449 Pt 1 HR14 |
| 30 | Circlip | DN32 to DN50 | | Steel zinc plated | |
| 31 | Mounting plate | DN25 to DN50 | | Steel zinc plated | BS 1449 Pt 1 HR14 |


SHOPVALVES
GLOBAL VALVE SOLUTIONS | 阀门易购

SHOPVALVES
GLOBAL VALVE SOLUTIONS | 阀门易购

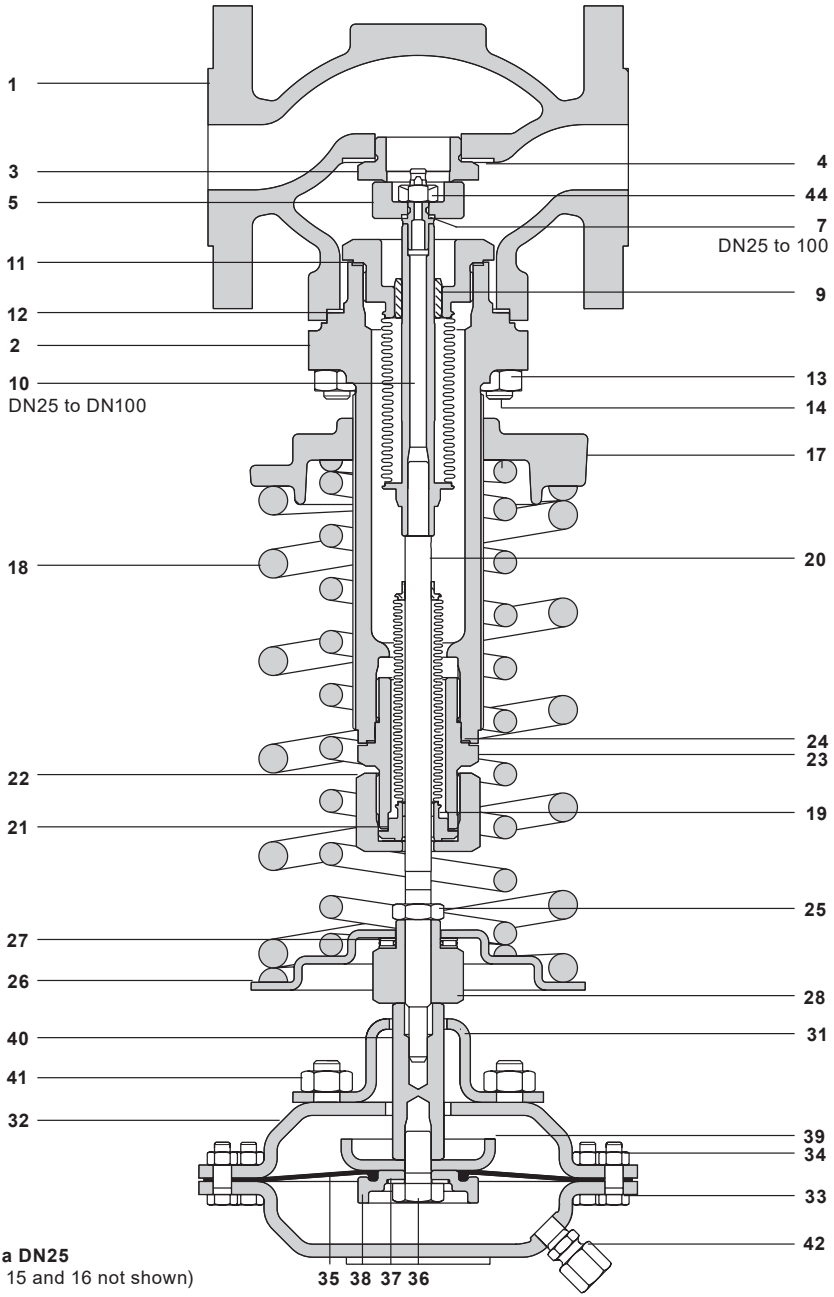


**Fig. 3a DN25**
(parts 15 and 16 not shown)



SHOPVALVES
GLOBAL VALVE SOLUTIONS | 阀门易购

SHOPVALVES
GLOBAL VALVE SOLUTIONS | 阀门易购

## 2.9 Materials (continued from pages 14 and 15)

| No. | Part | | Material | |
|---|---|---|---|---|
| 32 | Housing | Types 1(N) to 4(N) | Steel | DIN 1514 St W24 |
| | | Type 5(N) | Steel | BS EN 10025 S355 J2G3 |
| 33 | Housing screws | Types 1(N) | Steel zinc plated | BS 3692 Gr. 5.6 |
| | | Types 2(N), 3(N), 4(N) and 5(N) | Steel zinc plated | BS 3692 Gr. 8.8 |
| 34 | Housing nuts | Types 1(N) | Steel zinc plated | BS 3692 Gr. 5 |
| | | Types 2(N), 3(N), 4(N) and 5(N) | Steel zinc plated | BS 3692 Gr. 8 |
| 35 | Diaphragm | | EPDM fabric reinforced | |
| | Diaphragm suffix 'N' | | Nitrile fabric reinforced | |
| 36 | Hex. headed bolt | | Stainless steel | BS 6105 |
| 37 | Sealing washer | | Fibre | |
| 38 | Diaphragm clamp | | Stainless steel | ASTM A351 CF8M |
| 39 | Piston | | Carbon steel zinc plated | BS 1449 Pt 1 HR14 |
| 40 | Spindle | | Carbon steel zinc plated | BS 970 230 M07 |
| 41 | Mounting nuts | | Steel zinc plated | BS 3692 Gr. 8 |
| 42 | Coupling | | Steel zinc plated | |
| 43 | Thread insert | DN15 and DN20 | Stainless steel | DTD 734 |
| 44 | Self-locking nut | DN25 to DN100 | Stainless steel | BS 6105 A2 |
| 45* | Clamp plate | DN65 to DN100 only | Stainless steel | ASTM A276 316L |
| 46* | Gasket | DN65 to DN100 only | Reinforced exfoliated graphite | |

***Note**: Items 45 and 46 are for the DRV4 and DRV4G only.


SHOPVALVES
GLOBAL VALVE SOLUTIONS | 阀门易购

SHOPVALVES
GLOBAL VALVE SOLUTIONS | 阀门易购

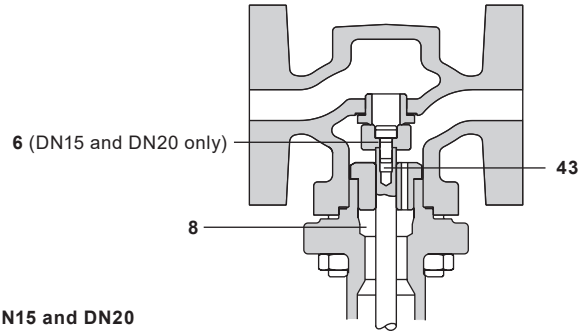


Fig. 3b DN15 and DN20

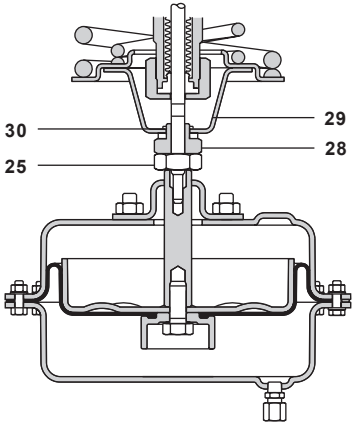


Fig. 3c DN32 to DN50

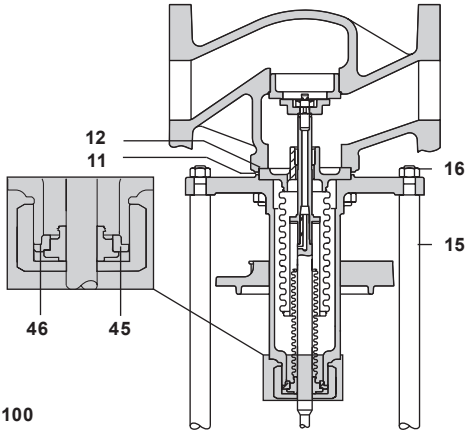


Fig. 3d DN65 to DN100



SHOPVALVES
GLOBAL VALVE SOLUTIONS | 阀门易购

SHOPVALVES
GLOBAL VALVE SOLUTIONS | 阀门易购

# 3. Installation

**Note: Before actioning any installation observe the 'Safety information' in Section 1.**

**In the case of liquid service, this product is to be used only on intermittant duty. Applications such as continuous pump recirculation may cause valve and pipework damage due to cavitation which is not covered under the terms of our warranty.**

## 3.1 General information

The valve should be installed in a horizontal pipeline.
For operating temperatures below 125 °C the valve may be installed either vertically upwards or vertically downwards (see Figure 4).
For operating on steam or temperatures above 125 °C the valve must be installed vertically downwards with the spring/actuator below the pipework with a water seal pot fitted on the downstream control signal line to the actuator, a typical installation is shown in Figure 5.
Care should be taken to install the valve correctly as indicated by the direction of flow arrow on the valve body.

**Fig. 4**
**Typical installation for downstream temperatures below 125 °C the valve can alternatively be mounted vertically upwards**

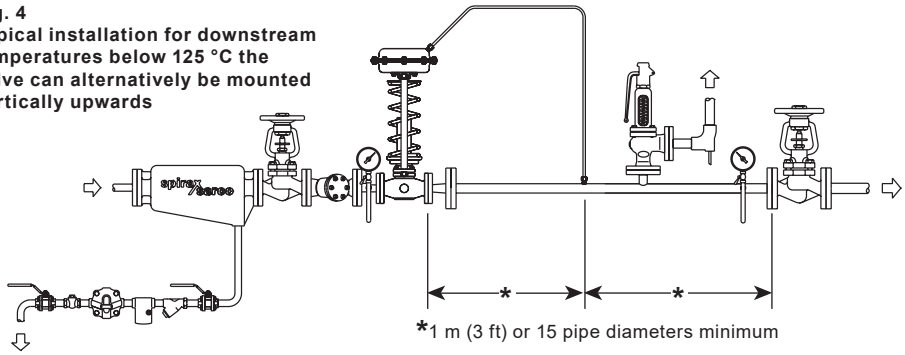


**Fig. 5**
**Typical installation for downstream temperatures above 125 °C**

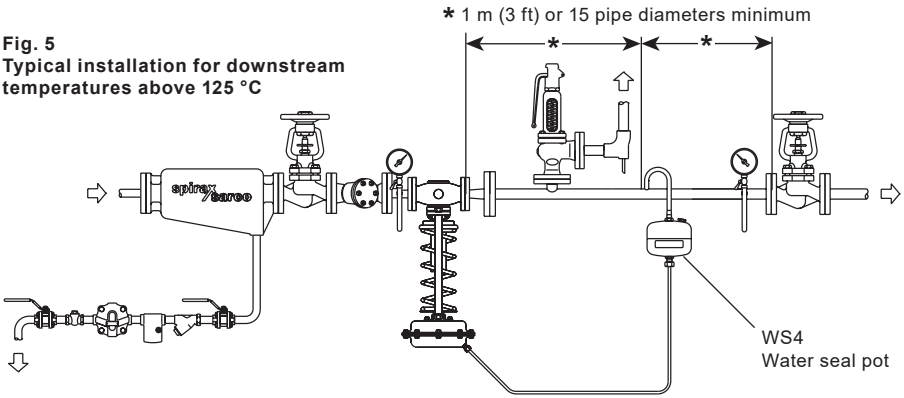



SHOPVALVES
GLOBAL VALVE SOLUTIONS | 阀门易购

SHOPVALVES
GLOBAL VALVE SOLUTIONS | 阀门易购

## 3.2 Pressure control pipe

The valve actuator signal connection must be piped directly to the downstream side. To provide a good control signal the downstream sensing point should be positioned a minimum of 1 metre or 15 pipe diameters away from the valve or change in pipework direction on either side. It is recommended that the actuator signal pipe should be 8 mm diameter copper or stainless steel of 1 m minimum length.

## 3.3 Preventing dirt

Before installing the valve the system pipework should be flushed out to remove any residual dirt or scale that may be present. The valve should be protected by a pipeline strainer of the same size as the upstream pipework. For steam and air applications the strainer should be installed on its side to prevent the accumulation of water.

## 3.4 Removal of condensate

For steam installations a separator should be installed on the upstream side of the valve fitted with a suitable steam trap.

## 3.5 Pressure gauges

To assist in commissioning the valve and monitoring operating conditions it is essential to fit pressure gauges on both upstream and downstream sides of the valve.

## 3.6 Safety valve

It is recommended that a suitable safety valve is installed on the downstream side of the valve to protect downstream equipment from excessive pressure.

The valve should be set to lift at a pressure below the safe working pressure of the downstream equipment and sized to pass the full capacity of the DRV should it fail in the fully open position. The safety valve outlet pipework should discharge to a safe place.

## 3.7 Isolating valves

It is recommended that manually operated isolating valves are installed upstream and downstream of the pressure reducing valve station to provide means of isolation for cleaning and maintenance.

## 3.8 Water seal pot

If fitted, the water seal pot must be charged with water prior to the valve being put into service. Remove the water seal pot filling plug and fully charge the vessel with soft water. Replace the filling plug.

For applications where there are rapid fluctuations in load or pressure the larger volume WS4-3 is recommended. To commission the valve, slowly open the upstream manual isolating valve to avoid waterhammer. The pressure reducing valve is now ready for operation.



SHOPVALVES
GLOBAL VALVE SOLUTIONS | 阀门易购

SHOPVALVES
GLOBAL VALVE SOLUTIONS | 阀门易购

## 3.9 Setting the desired downstream pressure

The valve is supplied 'unset' with the spring adjuster at its lowest adjustment position. The downstream pressure may be set against either a dead end condition or flowing condition, depending on the requirements of the application, taking into account the effect of proportional offset.

The desired downstream pressure is obtained by rotating the spring adjuster whilst monitoring the downstream pressure gauge.

Adjustment can be made using a standard open ended spanner size 17 mm A/F for valves up to DN50 and 24 mm A/F for sizes DN65 to DN100.

Compressing the control spring increases downstream set pressure and conversely relaxing the spring tension reduces the downstream set pressure (see Figure 6).

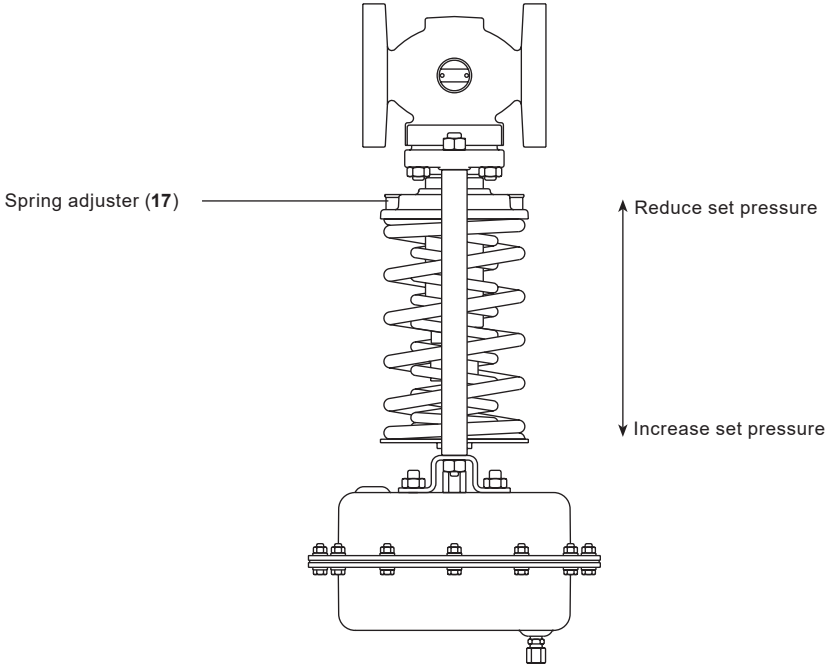


**Fig. 6**



SHOPVALVES
GLOBAL VALVE SOLUTIONS | 阀门易购

SHOPVALVES
GLOBAL VALVE SOLUTIONS | 阀门易购

# 4. Maintenance

**Note: Before actioning any maintenance program observe the 'Safety information', Section 1.**

## Product specific safety information

**This product should not be dismantled without first releasing the compression on the control spring.**

### Important note:

**When performing maintenance operations on the DRV do not turn the setting nut (28) without first releasing the lock-nut (25). Failure to do this will result in sealing bellows damage.**

## 4.1 General information

The valve is maintenance free, but it is recommended that the valve is dismantled every 12 to 18 months for routine inspection of the component parts. Items showing signs of wear should be replaced. Details of available spares are given in Section 5.

Prior to routine inspection or fitting spare components, firstly ensure the reducing valve is isolated and that the upstream and downstream pressures are reduced to zero, rotating spring adjuster (17) to reduce spring(s) compression to zero.

The downstream pressure signal pipe should be disconnected from the actuator.

**Safety note:** This product contains PTFE / steel composite brushes. The precautions laid down in Section 1.15 should be taken.



SHOPVALVES
GLOBAL VALVE SOLUTIONS | 阀门易购

SHOPVALVES
GLOBAL VALVE SOLUTIONS | 阀门易购

## 4.2 Recommended torques

| Valve size flg | Torque settings N m | | | | | |
|---|---|---|---|---|---|---|
| | Seat (3) | Balancing bellows assembly (10) | Adaptor (23) | Balancing to sealing bellows sealing/assy. (10/20) | Clamp nut (22) | Bonnet nuts (13) |
| DN15 | 50 - 55 | - | - | - | - | 15 - 20 |
| DN20 | 105 - 110 | - | - | - | - | 20 - 25 |
| DN25 | 160 - 170 | 90 - 100 | 55 - 60 | 2 - 3 | 40 - 45 | 25 - 30 |
| DN32 | 100 - 110 | 170 - 180 | 55 - 60 | 2 - 3 | 40 - 45 | 25 - 30 |
| DN40 | 175 - 185 | 170 - 180 | 55 - 60 | 2 - 3 | 40 - 45 | 25 - 30 |
| DN50 | 165 - 175 | 220 - 230 | 55 - 60 | 2 - 3 | 40 - 45 | 25 - 30 |
| DN65 | - | - | - | 2 - 3 | 60 - 65 | 40 - 45 |
| DN80 | - | - | - | 2 - 3 | 60 - 65 | 60 - 65 |
| DN100 | - | - | - | 2 - 3 | 60 - 65 | 50 - 55 |

### Common recommended torques

| | | | | |
|---|---|---|---|---|
| **Valve** | **8** | Spindle guide bush | DN15, DN20 only | 50-60 N m |
| | **16** | Pillar nuts | | 25-35 N m |
| | **20** | Sealing bellows assembly | DN15, DN20 only | 175-185 N m |
| | **28/25** | Setting nut/lock-nut | | 10-15 N m |
| | **44** | Self locking nut | Tighten to eliminate free play of head (5) | |
| **Actuator** | **33/34** | Housing bolts/nuts (Types 11, 11N, 12 and 12N) | | 4.5-5.5 N m |
| | | Housing bolts/nuts (Types 3, 3N, 4, 4N, 5 and 5N) | | 10.5-11.5 N m |
| | **37** | Diaphragm clamp bolt | | 23-27 N m |
| | **42** | Actuator mounting nuts | | 15-18 N m |

### Water seal pot

Fill plug = Tighten to seal

## 4.3 Setting 'maximum' valve lift

The maximum valve lift is factory set prior to despatch.

Should you wish to dismantle the valve for inspection or spares replacement, the maximum valve lift should be reset (see Section 4.3.1)

**Note: Removal of actuator only, will not alter the 'set' maximum valve lift.**
Before setting 'maximum' valve lift, the valve should be isolated with both upstream and downstream pressures at zero.


SHOPVALVES
GLOBAL VALVE SOLUTIONS | 阀门易购

SHOPVALVES
GLOBAL VALVE SOLUTIONS | 阀门易购

### 4.3.1 Procedure for setting maximum valve lift (Figure 7):

- Disconnect the downstream sensing pipe coupling (42). Unscrew the actuator mounting nuts (41) and remove the actuator from the valve.
- Rotate the spring adjuster (17) to reduce spring(s) compression to zero.
- Whilst retaining setting nut (28) unscrew the lock-nut (25).
- Whilst applying pressure to the end of the valve stem (20), to ensure the valve head (5) is touching the valve seat (3), unscrew the setting nut (28) until it touches the mounting plate (31).
- The maximum lift can now be set by rotating the setting nut by the number of turns given in Table 1.
- Whilst retaining setting nut (28) to prevent rotation, tighten the lock-nut (25) to the recommended torque given in Section 4.2.
- Refit actuator tightening mounting nuts to the recommended torque given in Section 4.2.
- Reconnect the downstream sensing pipe. If a water seal pot is fitted, it should be recharged with soft water prior to commissioning the valve.
- Recommission the valve as described in Sections 3.8 and 3.9.

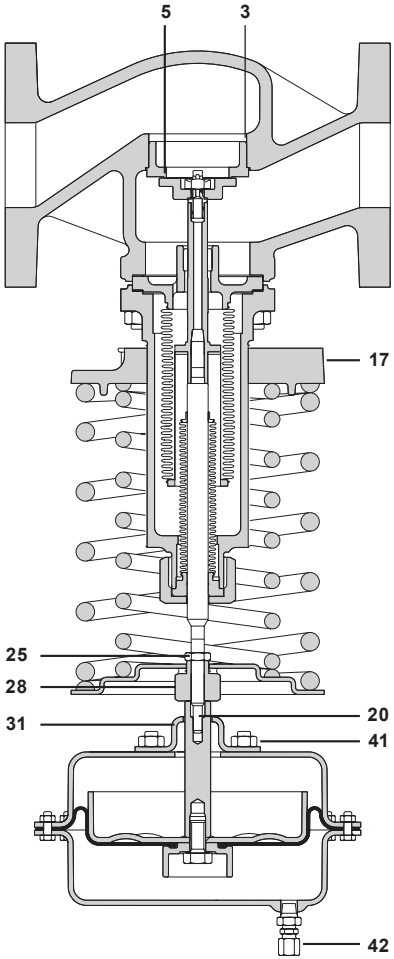


**Fig. 7**
**DN65 to DN100 shown**

## Table 1 Maximum lift settings

| Valve size | Maximum lift mm | Setting nut adjustment (turns and flats) |
|---|---|---|
| **DN15** | 4.00 | 2 turns 4 flats |
| **DN20** | 4.75 | 3 turns 1 flat |
| **DN25** | 6.25 | 4 turns 1 flat |
| **DN32** | 7.75 | 5 turns 1 flat |
| **DN40** | 9.00 | 6 turns |
| **DN50** | 11.00 | 7 turns 2 flats |
| **DN65** | 12.25 | 8 turns 1 flat |
| **DN80** | 15.75 | 10 turns 3 flats |
| **DN100** | 19.50 | 13 turns |


SHOPVALVES
GLOBAL VALVE SOLUTIONS | 阀门易购

SHOPVALVES
GLOBAL VALVE SOLUTIONS | 阀门易购

## 4.4 Fitting spares

### 4.4.1 To renew actuator diaphragm and sealing washer (Figure 9):

- Before fitting replacement actuator spares the actuator should be removed from the valve.
- Remove the actuator housing nuts and bolts (33, 34) and separate actuator housing (32).
- Unscrew hex. headed bolt (36) and remove bolt, diaphragm clamp (38), sealing washer (37), diaphragm (35) and spindle (40).
- Fit a new diaphragm (35).
- Replace the diaphragm clamp, ensuring the diaphragm sealing lip is correctly located within the diaphragm clamp.
- Fit a new fibre sealing washer and replace the bolt/spindle, tightening to the recommended torque given in Section 4.2.
- Refit the upper actuator housing.
- Replace the housing nuts/bolts and tighten to the recommended torque given in Section 4.2.
- Refit the upper housing.
- Replace housing nuts/bolts and tighten to the recommended torque given in Section 4.2.
- Refit the actuator assembly to the valve, tightening the actuator mounting nuts (41) to the recommended torque given in Section 4.2.
- Reconnect the downstream sensing pipe.
- If a water seal pot is fitted, it should be recharged with soft water prior to commissioning the valve.
- Recommission the valve as described in Sections 3.8 and 3.9.

### 4.4.2 To renew control spring(s) (Figure 8 and 9):

- Rotate the spring adjuster (17) to reduce spring(s) (18) compression to zero.
- Disconnect the downstream pressure signal pipe. Unscrew the actuator mounting nuts (41) and remove the actuator from the valve.
- Unscrew the pillar nuts (16) and remove the mounting plate (31).
- Whilst retaining the setting nut (28) unscrew the lock-nut (25), remove the setting nut (28),
- lock-nut (25), needle bearing (27), spring plate (26), bearing plate (29) and spring(s) (18).
- Fit new spring(s) and reassemble the spring plate, needle bearing and setting nut.
- Refit the mounting plate and pillar nuts and tighten to the recommended torque given in Section 4.2.
- Set the maximum valve lift and reconnect the pressure signal pipe as described in Section 4.3.
- Recommission the valve as described in Sections 3.8 and 3.9.


SHOPVALVES
GLOBAL VALVE SOLUTIONS | 阀门易购

SHOPVALVES
GLOBAL VALVE SOLUTIONS | 阀门易购

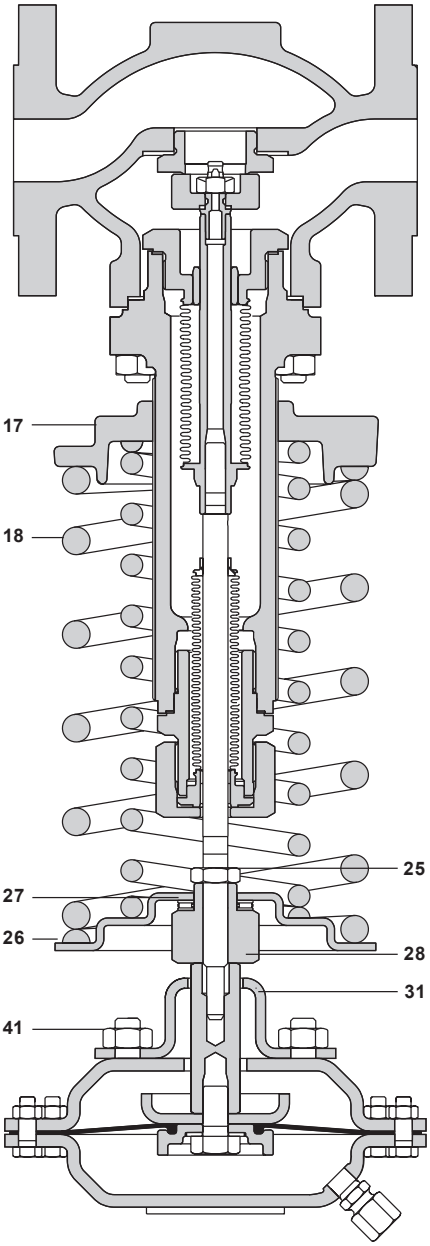


Fig. 8
DN25 shown (Item 6 and 16 not shown)

### 4.4.3 To renew sealing bellows assembly (Figure 8 and 9):

Note: Care should be taken not to touch the bellows as contamination can cause corrosion.

- Rotate the spring adjuster (17) to reduce spring(s) (18) compression to zero.
- Disconnect the downstream pressure signal pipe. Remove actuator mounting nuts (41) and remove the actuator from the valve.
- Unscrew and remove the pillar nuts (16) and remove the mounting plate (31). Whilst retaining the lock-nut (25) unscrew and remove the setting nut (28), needle bearing assembly (27), bearing plate (29), spring plate (26), lock-nut (25), and spring(s) (18), as previously described in Section 4.4.2

.

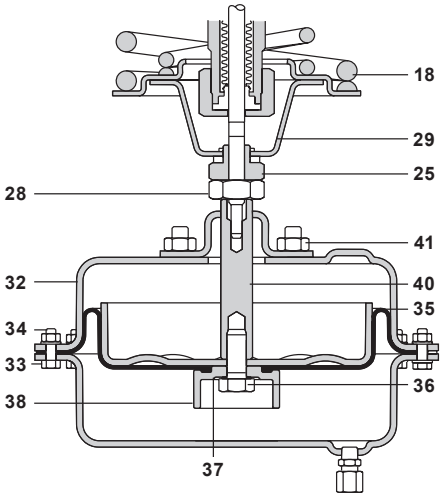


Fig. 9
DN32 to DN50 shown



SHOPVALVES
GLOBAL VALVE SOLUTIONS | 阀门易购

SHOPVALVES
GLOBAL VALVE SOLUTIONS | 阀门易购

## For valve sizes DN15 and DN20:

- Remove the bonnet nuts (13) and remove the bonnet assembly from the valve body (1).
- Remove the valve head screw (6 not shown), valve head (5) and the head seal (7).
- Unscrew the sealing bellows assembly (20) and remove with gasket (21).
- Refit a new sealing bellows assembly (20) using a new sealing bellows gasket (21), tighten to recommended torque given in Section 4.2.
- Before refitting the valve head check for signs of damage or wear to the valve head and seat and replace as necessary (see Section 4.4.5).
- Refit the valve head seal (7), valve head (5) and valve head screw (6 not shown) and tighten to eliminate free movement of the valve head. Note: The internal thread of the sealing bellows is fitted with a self-locking thread insert to prevent loosening of the valve head screw during normal operation.
- Refit the bonnet assembly onto the body assembly (1) using a new bonnet gasket (12).
- Refit and tighten the bonnet nuts (13) to the recommended torque given in Section 4.2.
- Refit lock-nut (25), spring(s) (18), spring plate (26), needle bearing (27), setting nut (28) mounting plate (31) and pillar nuts (16 not shown) and tighten to the recommended torque given in Section 4.2.
- Reset the maximum lift as described in Section 4.3 and refit the actuator and recommission in accordance with Sections 3.8. and 3.9.

## For valve sizes DN25 to DN100:

- Whilst retaining the adaptor (23) unscrew and remove clamp nut (22).
- Unscrew and remove the sealing bellows assembly (20) and gasket (21).
- Fit a new sealing bellows assembly (20) and gasket (21). For the DRV4 DN65 to DN100 a clamp plate (45) is used with the sealing bellows requiring an additional gasket (46).
- Refit the clamp nut (22) and tighten to the recommended torque given in Section 4.2.
- All other components can now be reassembled and the valve recommissioned as described above for DN15 and DN20 valves.


SHOPVALVES
GLOBAL VALVE SOLUTIONS | 阀门易购

SHOPVALVES
GLOBAL VALVE SOLUTIONS | 阀门易购

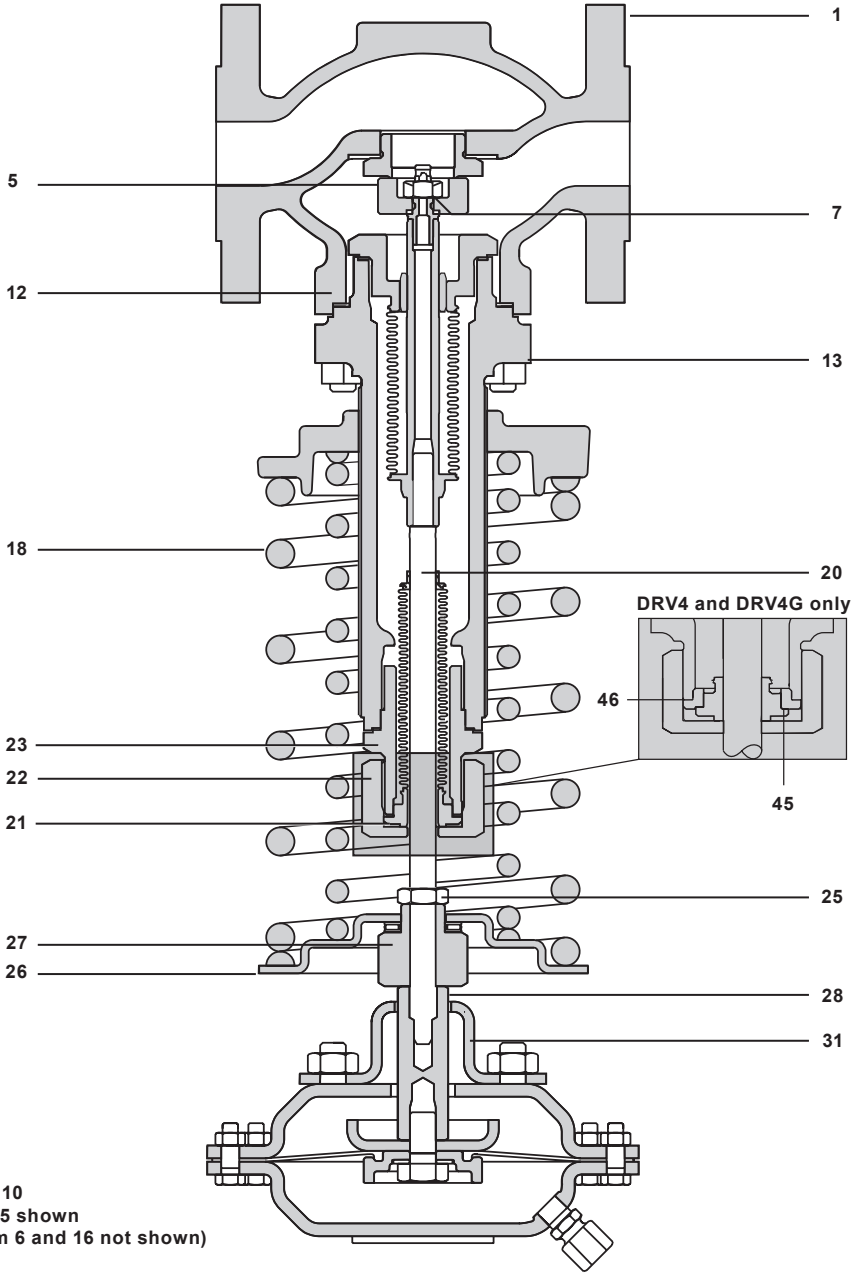


**Fig. 10**
**DN25 shown**
**(Item 6 and 16 not shown)**



SHOPVALVES
GLOBAL VALVE SOLUTIONS | 阀门易购

SHOPVALVES
GLOBAL VALVE SOLUTIONS | 阀门易购

### 4.4.4 To renew balancing bellows assembly (Figure 11) - For valve sizes DN25 to DN50:

- Firstly remove the actuator assembly and sealing bellows following the procedure outlined in Section 4.4.3. then proceed as follows:
- Remove the bonnet nuts (13) and withdraw the bonnet assembly from the valve body (1).
- Remove the valve head self-locking nut (44), valve head (5) and the head seal (7).
- Unscrew and remove the balancing bellows assembly (10) and gasket (11) from the bonnet (2).
- The balancing bellows assembly can now be inspected for damage and if necessary replaced.
- Refit the balancing bellows assembly (10) into the bonnet using a new sealing gasket (11) and tighten to the recommended torque given in Section 4.2. Inspect the valve head and seat for damage and replace if necessary.
- Using a new head seal (7) refit the valve head (5) and self-locking nut (44), tightening to eliminate any free play of the head.
- Refit the bonnet assembly (2) into the valve body (1) using a new bonnet gasket (12).
- Refit the bonnet nuts (13) and tighten to the recommended torque given in Section 4.2. The sealing bellows, actuator assembly and all remaining component should now be refitted and the new valve brought back into service, all as described in Section 4.4.3.

### 4.4.5 For valve sizes DN65 to DN100:

Note: For DN65 to DN100 valves it is not necessary to remove the sealing bellows or actuator to replace the balancing bellows assembly. Therefore, proceed as follows:

- Rotate the spring adjuster (17) to reduce spring(s) (18) compression to zero.
- Remove the bonnet nuts (13) and withdraw the bonnet assembly (2) and bonnet gasket (12) from the valve body (1).
- Remove the valve head self-locking nut (44), valve head (5) and the head seal (7).
- Rotate the balancing bellows assembly (10) to unscrew from the sealing bellows assembly (20) and withdraw the balancing bellows assembly (10) and bonnet gasket (11) from the bonnet (2).
- The balancing bellows can now be examined for damage and if necessary replaced.
- Apply graphite paste to the sealing bellows thread within the bonnet assembly.
- Inspect the valve head for damage and replace if necessary.
- Using a new head seal (7) refit the valve head (5) and self-locking nut (44), tightening to eliminate any free play of the valve head.
- Refit the balancing bellows assembly (10) into the bonnet (2) using a new gasket (11).
- Taking particular care to ensure correct location, rotate and tighten the balancing bellows assembly into the sealing bellows assembly.
- Using a new gasket (12), refit the bonnet assembly onto the valve body (1) and replace the bonnet nuts (13), tightening to the recommended torque given in Section 4.2.
- Reconnect the downstream pressure signal line ensuring that the water seal pot, if fitted is recharged with soft water and recommissioned as described in Sections 3.8 and 3.9.


SHOPVALVES
GLOBAL VALVE SOLUTIONS | 阀门易购

SHOPVALVES
GLOBAL VALVE SOLUTIONS | 阀门易购

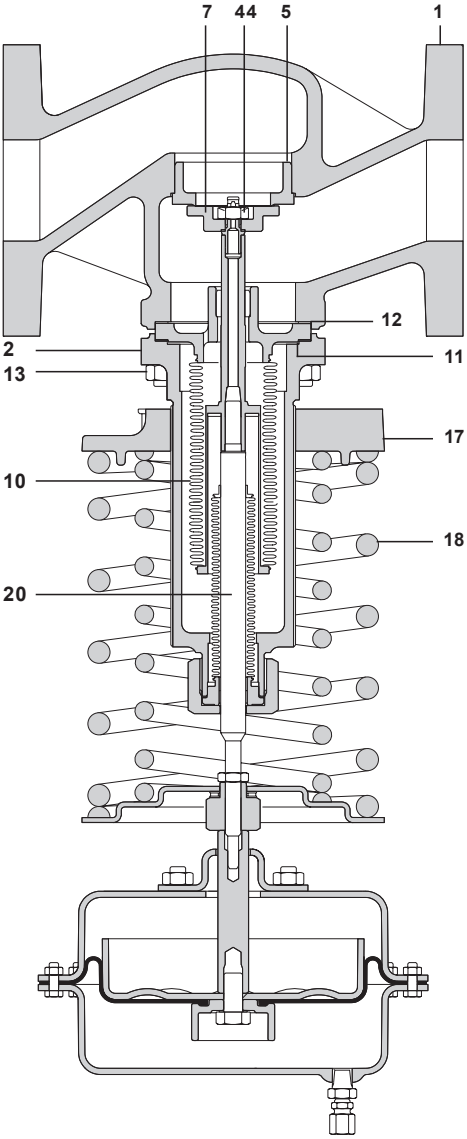


Fig. 11 DN65 to DN100 shown

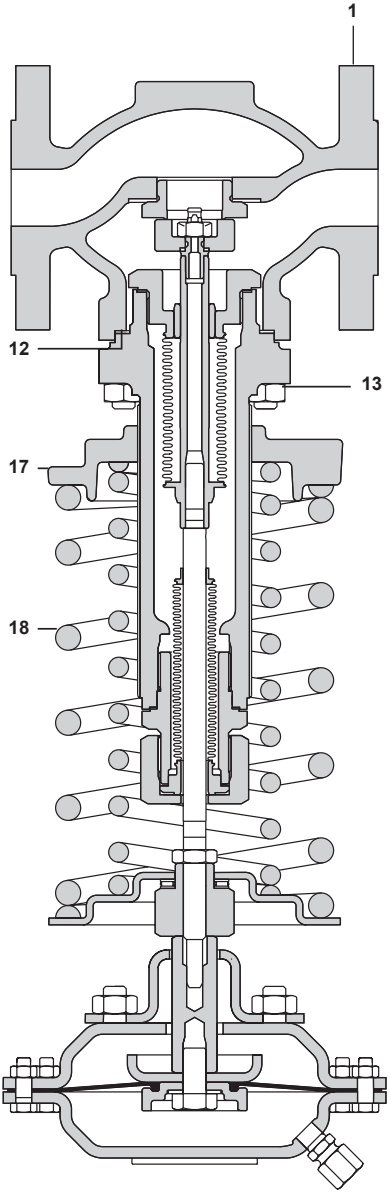


Fig. 12 DN25 shown



SHOPVALVES
GLOBAL VALVE SOLUTIONS | 阀门易购

SHOPVALVES
GLOBAL VALVE SOLUTIONS | 阀门易购

### 4.4.6 To renew valve head and seat (Figure 13):

- Rotate the spring adjuster (17) to reduce spring(s) (18) compression to zero.
- Disconnect the downstream pressure signal pipe and remove the bonnet / spring / actuator assembly as described in Section 4.4.4.
- Inspect the valve head and if necessary renew the head (5) and head seal (7) as described in Section 4.4.4.
- Inspect the valve seat (3).
- If necessary renew the seat (3) and seat gasket (4) (DN15 to DN50 only) tightening to the recommended torque given in Section 4.2.
- For sizes DN15, DN20 and DN25 it is recommended that a non setting jointing compound (e.g. Stag brand jointing paste) is applied to the seating faces at this stage.
- Refit the bonnet/spring/actuator assembly using a new bonnet gasket (12). Tighten the bonnet nuts (13) to the recommended torque, given in Section 4.2.
- Set the maximum valve lift and reconnect the pressure signal pipe, all as described in Section 4.3.
- Recommission the valve in accordance with Sections 3.8 and 3.9.

### 4.4.7 To renew needle bearing assembly (Figure 13):

- Rotate the spring adjuster (17) to reduce spring(s) (18) compression to zero.
- Disconnect the downstream pressure signal line from the coupling (42) and remove the actuator from the valve.
- Unscrew the pillar nuts (16 not shown) and remove the actuator mounting plate (31).
- Whilst retaining the setting nut (28) unscrew the lock-nut (25).
- Remove the setting nut (28) and the needle bearing assembly (27).
- Refit in reverse order using new lubricating grease prior to fitting.
- Set the maximum valve lift and reconnect the pressure signal pipe, all as described in Section 4.3.
- Recommission the valve as described in Sections 3.8 and 3.9.


SHOPVALVES
GLOBAL VALVE SOLUTIONS | 阀门易购

SHOPVALVES
GLOBAL VALVE SOLUTIONS | 阀门易购

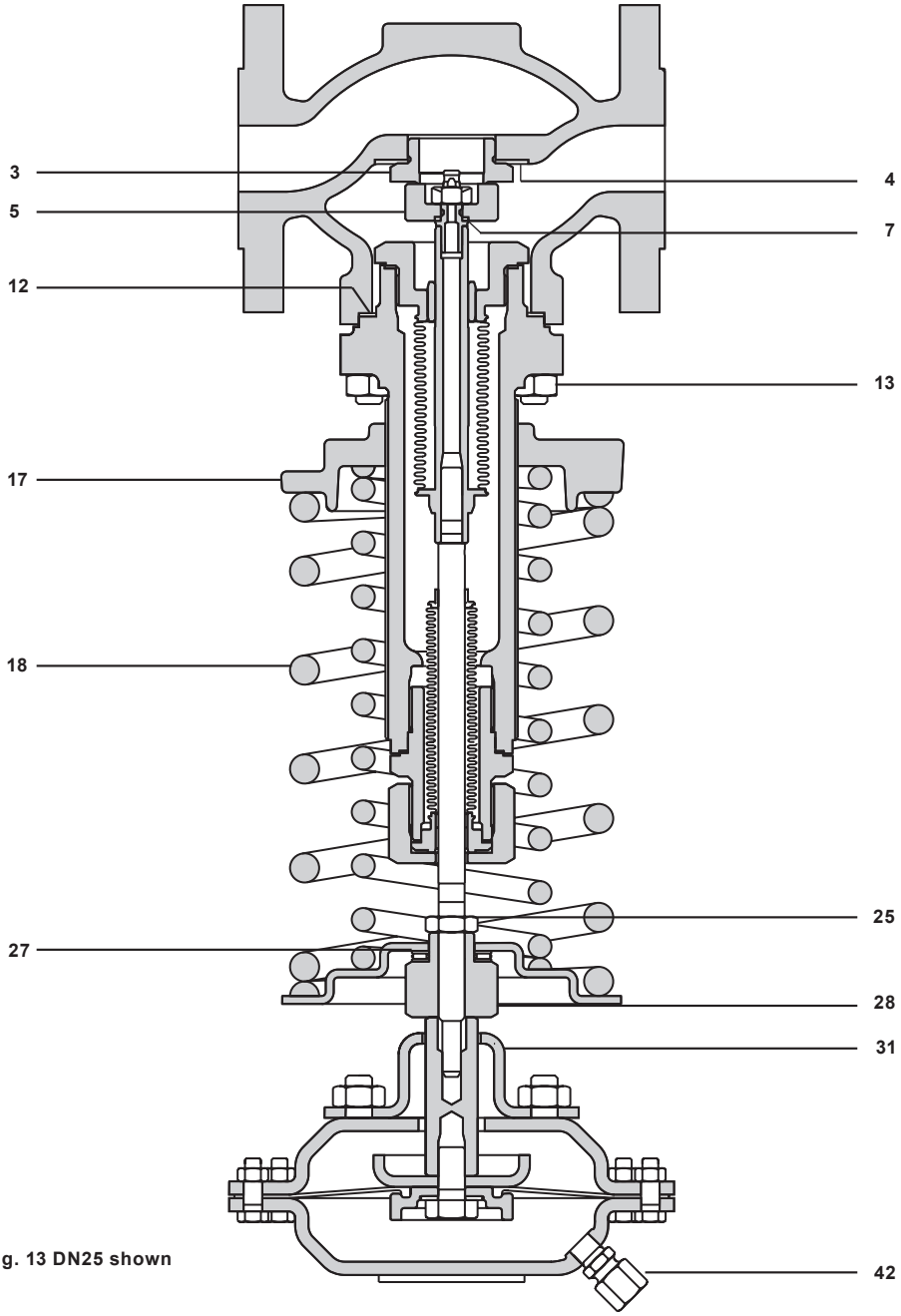


Fig. 13 DN25 shown



SHOPVALVES
GLOBAL VALVE SOLUTIONS | 阀门易购

SHOPVALVES
GLOBAL VALVE SOLUTIONS | 阀门易购

# 5. Spare parts

## DN15 and DN20

The spare parts available for sizes DN15 and DN20 valves are detailed below.
No other parts are supplied as spares.

### Available spares

| | | |
|---|---|---|
| **Coupling** | | **A** |
| **Diaphragm set** | Diaphragm and sealing washer. | **B, C** |
| **Needle bearing** | | **D** |
| **Sealing bellows set** | Sealing bellows assembly, sealing bellows gasket and bonnet gasket. | **E, F, G** |
| **Control spring(s)** | | **I** |
| **Seat/head set** | Seat, seat gasket, head, bonnet gasket and head seal. | **J, K, L, G, H** |
| **Gasket set** | Sealing bellows gasket, bonnet gasket and seat gasket. | **F, G, K** |

### How to order spares

Always order spares by using the description given in the column headed 'Available spares' and state the size and type of valve.

**Example**: 1 - Gasket set for a DN15 DRV7B1 pressure reducing valve.


SHOPVALVES
GLOBAL VALVE SOLUTIONS | 阀门易购

SHOPVALVES
GLOBAL VALVE SOLUTIONS | 阀门易购

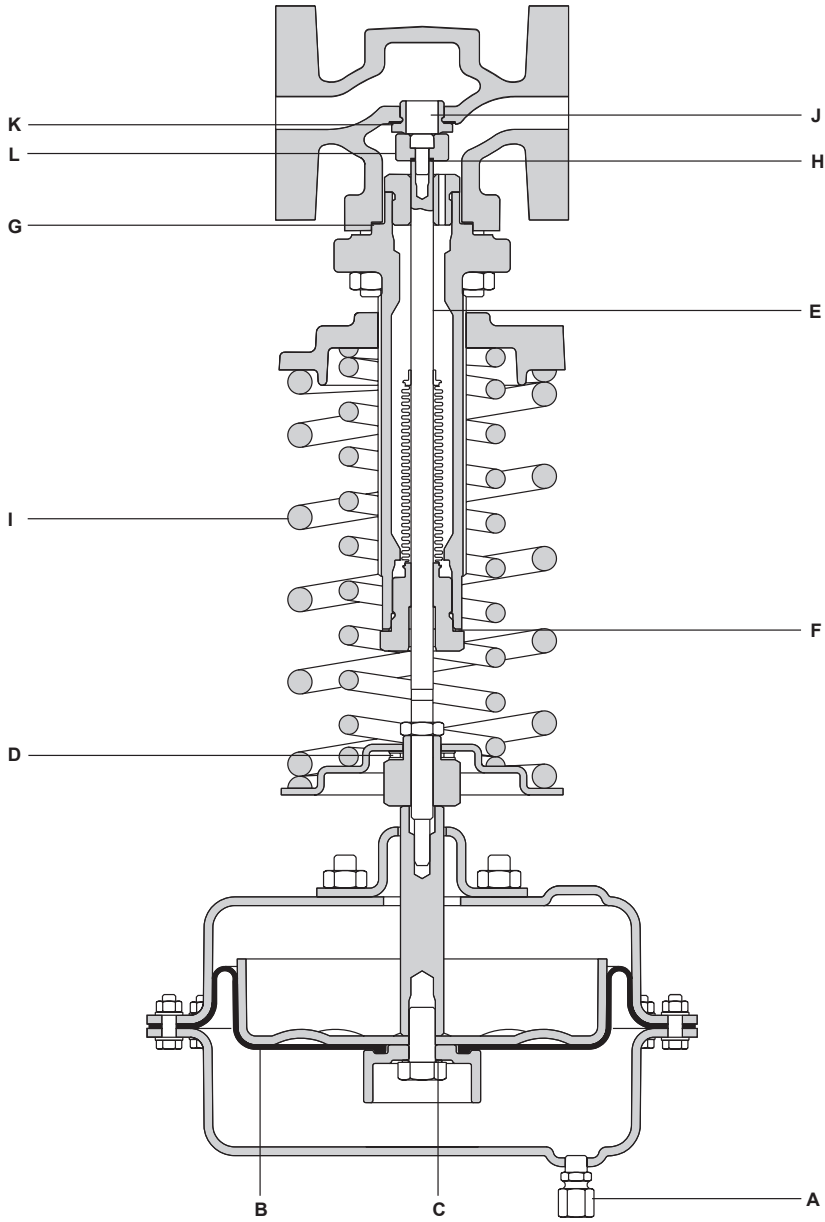


**Fig. 14 DN15 and DN20**



SHOPVALVES
GLOBAL VALVE SOLUTIONS | 阀门易购

SHOPVALVES
GLOBAL VALVE SOLUTIONS | 阀门易购

# DN25 to DN100

The spare parts available for sizes DN25 to DN100 valves are detailed below. No other parts are supplied as spares.

## Available spares

| | |
|---|---|
| **Coupling** | **A** |
| **Diaphragm kit**<br>Diaphragm and sealing washer. | **B, C** |
| **Needle bearing** | **D** |
| **Sealing bellows set**<br>Sealing bellows assembly, sealing bellows gasket,<br>(Plus adaptor gasket DN25 to DN50, plus clamp plate gasket DRV4 DN65 to DN100). | **E, F, (O), (R)** |
| **Control spring(s)** | **I** |
| **Seat/head set DN25 to DN50**<br>Seat, seat gasket, head, self-locking nut, head seal and bonnet gasket. | **J, K, L, W, H, G** |
| **Head set DN65 to DN100**<br>Head, self-locking nut, head seal, bonnet gasket and balancing bellows gasket. | **L, W, H, G, M** |
| **Balancing bellows set DN25 to DN50**<br>Balancing bellows assembly, balancing bellows gasket,<br>bonnet gasket, self-locking nut, head seal, sealing bellows gasket and adaptor gasket. | **N, M, G, W, H, F, O** |
| **Balancing bellows set DN65 to DN100**<br>Balancing bellows assembly, balancing bellows gasket, bonnet gasket, self-locking nut and head seal. | **N, M, G, W, H** |
| **Gasket set DN25 to DN50**<br>Sealing bellows gasket, bonnet gasket, seat gasket,<br>balancing bellows gasket and adaptor gasket. | **F, G, K, M, O** |
| **Gasket set DN65 to DN100**<br>Sealing bellows gasket, bonnet gasket, balancing bellows gasket and clamp plate gasket (DRV4). | **F, G, M, R** |

**Note**: Earlier constructions of DN25 - DN50 DRV valves were fitted with an adaptor which required an adaptor gasket (O). Please refer to Fig. 12b and 12c.
Later constructions do not have an adaptor or adaptor gasket.

# How to order spares

Always order spares by using the description given in the column headed 'Available spares' and state the size and type of valve.

**Example**: 1 - Gasket set for a DN25 DRV7B1 pressure reducing valve.


SHOPVALVES
GLOBAL VALVE SOLUTIONS | 阀门易购

SHOPVALVES
GLOBAL VALVE SOLUTIONS | 阀门易购

***Note:** Item H is only fitted to DN25 - DN100 valves.

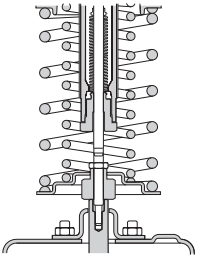

**Fig. 15a**
**DN15 to DN20**

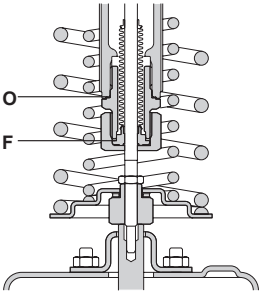


**Fig. 15b DN25**

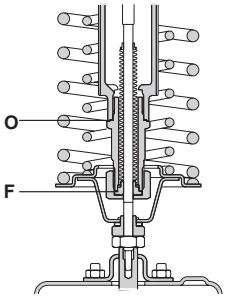


**Fig. 15c**
**DN32 to DN50**

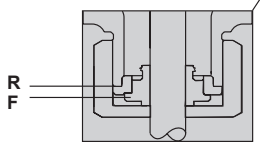


**DRV4**
**DN65 to DN100**

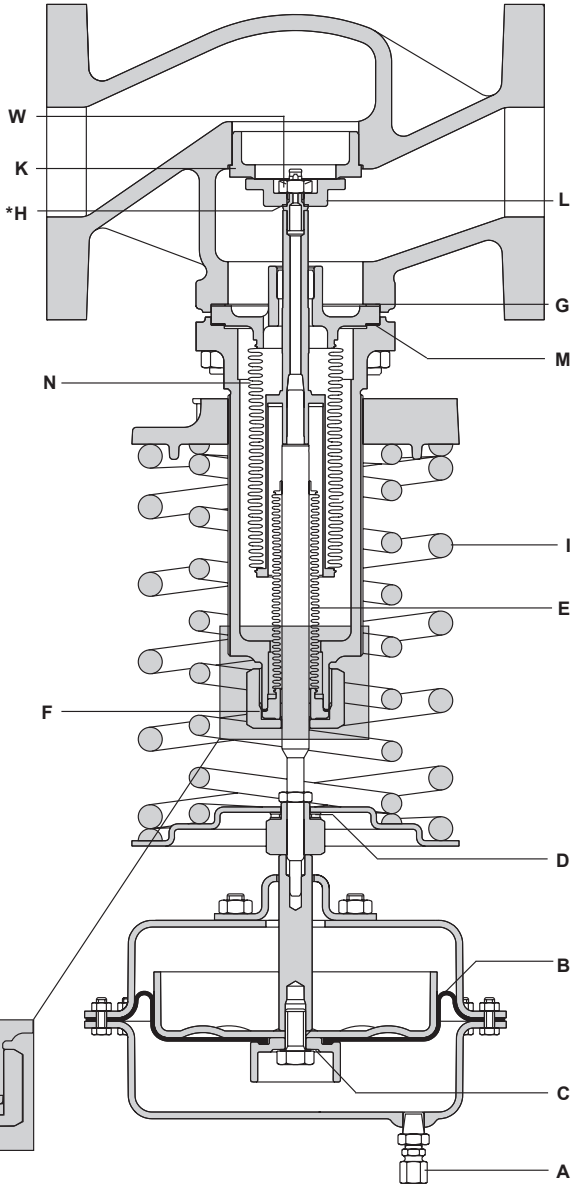


**Fig. 15d DN25 to DN100**



SHOPVALVES
GLOBAL VALVE SOLUTIONS | 阀门易购

SHOPVALVES
GLOBAL VALVE SOLUTIONS | 阀门易购

# 6. Fault finding

**Before investigating any fault ensure that both upstream and downstream isolating valves are shut.**

| Symptom | Possible cause | Remedy |
|---|---|---|
| **Downstream pressure increases above it's 'set' pressure.** | 1. Blockage of the pressure signal pipe or coupling. | 1. Disconnect the pressure signal pipe from the actuator coupling and blow through the pipe and coupling to clear obstruction.<br>It is recommended that for causes 2 to 5, components are checked in the following sequence, using the relevant data from Section 4. |
| | 2. Leakage across actuator diaphragm or actuator diaphragm clamp gasket. | 2. Remove the actuator housing and inspect the diaphragm and diaphragm clamp washer, replacing as necessary. |
| | 3. Damage or erosion to valve head/seat. | 3. Remove the bonnet/spring / actuator assembly and inspect the valve head and seat for damage or wear and replace as necessary. |
| | 4. Failure of the balancing bellows assembly (DN25 to DN100 valves only) | 4. Remove the balancing bellows assembly (DN25 to DN100 valves only) and inspect for failure of the balancing bellows. Replace as necessary. |
| | 5. Leakage of sealing bellows. | 5. Remove the stem sealing bellows assembly, examining for failure. Replace as necessary. |
| **Under full load condition, downstream pressure drop is in excess of the required pressure control.** | The valve is achieving maximum lift, but is undersized for the duty required. | Check maximum installed load condition required and valve size selected and installed. |
| **Valve is correctly sized but is not supplying full load.** | The valve is not achieving full lift position at maximum load. | Check full lift setting as described in Section 4.3. |
| **On low flow conditions, downstream pressure is hunting.** | 1. Over sensitive pressure control signal. | 1. Remove 8 mm pressure signal pipe and actuator/water seal pot couplings and replace with 6 mm signal pipe and couplings. |
| | 2. High pressure turndown ratios. | 2. Consider two valves in series to reduce turn down ratios. |
| | 3. Downstream pressure tapping is too close to valve. | 3. Ensure the downstream pressure signal tapping is not located within a turbulent area and is at least 1 m (40") from any valve or fitting. |
| **Unable to adjust downstream set pressure** | The actuator is not being subjected to downstream pressure. | Remove the signal pipe from the actuator and check for sludge build-up and blockage. |


SHOPVALVES
GLOBAL VALVE SOLUTIONS | 阀门易购