SHOPVALVES
GLOBAL VALVE SOLUTIONS | 阀门易购

spirax sarco

FTS14 Austenitic Stainless Steel Ball Float Steam Trap ½" (DN15) to 1" (DN25)

Installation and Maintenance Instructions

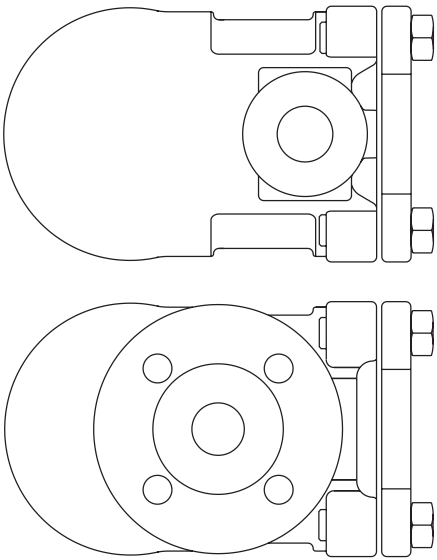

1. Safety information
2. General product information
3. Installation
4. Commissioning
5. Operation
6. Maintenance
7. Spare parts

© Copyright 2025

Printed in GB

SHOPVALVES
GLOBAL VALVE SOLUTIONS | 阀门易购

SHOPVALVES
GLOBAL VALVE SOLUTIONS | 阀门易购

1. Safety information

Safe operation of this product can only be guaranteed if it is properly installed, commissioned, used and maintained by qualified personnel (see Section 1.11) in compliance with the operating instructions. General installation and safety instructions for pipeline and plant construction, as well as the proper use of tools and safety equipment must also be complied with.

1.1 Intended use

Referring to the Installation and Maintenance Instructions, name-plate and Technical Information Sheet, check that the product is suitable for the intended use / application.

This product complies with the requirements of the European Pressure Equipment Directive 2014/68/EU and falls within category SEP and therefore does not carry the CE mark.

Product			Group 2 Gases	Group 2 Liquids
FTS14	½"	DN15	SEP	SEP
	¾"	DN20	SEP	SEP
	1"	DN25	SEP	SEP

i) **The product has been specifically designed for use on steam, air or condensate which is in Group 2 of the above mentioned Pressure Equipment Directive.**

The products' use on other fluids may be possible but, if this is contemplated, Spirax Sarco should be contacted to confirm the suitability of the product for the application being considered.

ii) **Check material suitability, pressure and temperature and their maximum and minimum values. If the maximum operating limits of the product are lower than those of the system in which it is being fitted, or if malfunction of the product could result in a dangerous overpressure or overtemperature occurrence, ensure a safety device is included in the system to prevent such over-limit situations.**

iii) **Determine the correct installation situation and direction of fluid flow.**

iv) **Spirax Sarco products are not intended to withstand external stresses that may be induced by any system to which they are fitted. It is the responsibility of the installer to consider these stresses and take adequate precautions to minimise them.**

v) **Remove protection covers from all connections and protective film from all name-plates, where appropriate, before installation on steam or other high temperature applications.**

1.2 Access

Ensure safe access and if necessary a safe working platform (suitably guarded) before attempting to work on the product. Arrange suitable lifting gear if required.

1.3 Lighting

Ensure adequate lighting, particularly where detailed or intricate work is required.

SHOPVALVES
GLOBAL VALVE SOLUTIONS | 阀门易购

SHOPVALVES
GLOBAL VALVE SOLUTIONS | 阀门易购

1.4 Hazardous liquids or gases in the pipeline

Consider what is in the pipeline or what may have been in the pipeline at some previous time. Consider: flammable materials, substances hazardous to health, extremes of temperature.

1.5 Hazardous environment around the product

Consider: explosion risk areas, lack of oxygen (e.g. tanks, pits), dangerous gases, extremes of temperature, hot surfaces, fire hazard (e.g. during welding), excessive noise, moving machinery.

1.6 The system

Consider the effect on the complete system of the work proposed. Will any proposed action (e.g. closing isolation valves, electrical isolation) put any other part of the system or any personnel at risk? Dangers might include isolation of vents or protective devices or the rendering ineffective of controls or alarms. Ensure isolation valves are turned on and off in a gradual way to avoid system shocks.

1.7 Pressure systems

Ensure that any pressure is isolated and safely vented to atmospheric pressure.
Consider double isolation (double block and bleed) and the locking or labelling of closed valves.
Do not assume that the system has depressurised even when the pressure gauge indicates zero.

1.8 Temperature

Allow time for temperature to normalise after isolation to avoid the danger of burns and consider whether protective clothing (including safety glasses) is required.

Viton 'O' ring:

If the Viton 'O' ring has been subjected to a temperature approaching 315 °C (599 °F) or higher, it may have decomposed and formed hydrofluoric acid. Avoid skin contact and inhalation of any fumes as the acid will cause deep skin burns and damage the respiratory system.

1.9 Tools and consumables

Before starting work ensure that you have suitable tools and/or consumables available. Use only genuine Spirax Sarco replacement parts.

1.10 Protective clothing

Consider whether you and/or others in the vicinity require any protective clothing to protect against the hazards of, for example, chemicals, high/low temperature, radiation, noise, falling objects, and dangers to eyes and face.

1.11 Permits to work

All work must be carried out or be supervised by a suitably competent person.
Installation and operating personnel should be trained in the correct use of the product according to the Installation and Maintenance Instructions.
Where a formal 'permit to work' system is in force it must be complied with. Where there is no such system, it is recommended that a responsible person should know what work is going on and, where necessary, arrange to have an assistant whose primary responsibility is safety.
Post 'warning notices' if necessary.

SHOPVALVES
GLOBAL VALVE SOLUTIONS | 阀门易购

SHOPVALVES
GLOBAL VALVE SOLUTIONS | 阀门易购

1.12 Handling

Manual handling of large and/or heavy products may present a risk of injury. Lifting, pushing, pulling, carrying or supporting a load by bodily force can cause injury particularly to the back. You are advised to assess the risks taking into account the task, the individual, the load and the working environment and use the appropriate handling method depending on the circumstances of the work being done.

1.13 Residual hazards

In normal use the external surface of the product may be very hot. If used at the maximum permitted operating conditions the surface temperature of the product may reach temperatures in excess of 400 °C (752 °F).
Many products are not self-draining. Take due care when dismantling or removing the product from an installation (refer to 'Maintenance instructions').

1.14 Freezing

Provision must be made to protect products which are not self-draining against frost damage in environments where they may be exposed to temperatures below freezing point.

1.15 Disposal

The product is recyclable. No ecological hazard is anticipated with the disposal of this product providing due care is taken, EXCEPT:

Viton 'O' ring:

- Waste parts can be landfilled, when in compliance with National and Local regulations.
- Waste parts can be incinerated, but a scrubber must be used to remove Hydrogen Fluoride, which is evolved from the product and with compliance to National and Local regulations.
- Parts are insoluable in aquatic media.

Please visit the Spirax Sarco product compliance web pages
https://www.spiraxsarco.com/product-compliance
for up to date information on any substances of concern that may be contained within this product. Where no additional information is provided on the Spirax Sarco product compliance web page, this product may be safely recycled and/or disposed providing due care is taken. Always check your local recycling and disposal regulations.

1.16 Returning products

Customers and stockists are reminded that under EC Health, Safety and Environment Law, when returning products to Spirax Sarco they must provide information on any hazards and the precautions to be taken due to contamination residues or mechanical damage which may present a health, safety or environmental risk. This information must be provided in writing including Health and Safety data sheets relating to any substances identified as hazardous or potentially hazardous.

SHOPVALVES
GLOBAL VALVE SOLUTIONS | 阀门易购

SHOPVALVES
GLOBAL VALVE SOLUTIONS | 阀门易购

2. General product information

2.1 General description

The FTS14 is an austenitic stainless steel ball float steam trap with an integral automatic air vent.
It provides efficient condensate drainage and prompt air removal to ensure process equipment operates to its maximum potential.

As standard the FTS14 has horizontal connections with flow from right to left (R-L). However its unique design allows the cover to be simply rotated to provide horizontal left to right (L-R) and vertical up or vertical down configurations.

Standards

This product fully complies with the requirements of the European Pressure Equipment Directive 2014/68/EU.

Certification

This product is available with certification to EN 10204 3.1.
Note: All certification/inspection requirements must be stated at the time of order placement.

Optional extras

FTS14X is available with an integral strainer screen to protect the internals from dirt.
FTS14-C is a combined steam lock release (SLR) valve and thermostatic air vent. This is used on applicatons where steam locking can occur. See Section 3.11.
The trap can also be supplied with optional tapping in the cover to take a suitable temperature sensor such as a PT100. Thread size is ⅛" BSP and is supplied with a stainless steel plug fitted.

Note: For additional product information see the Technical Information Sheet TI-P145-01.

2.2 Sizes and pipe connections

½", ¾" and 1"	Screwed BSP T Rp (ISO 7-1) or NPT (ASME B 1.20.1)
½", ¾" and 1"	Socket weld ends to ASME B 16.11, BS 3799 Class 3000 or DIN 3239
DN15, 20 and 25	Flanged ends to ASME B 16.5 Class 150 and 300 or EN 1092-1/PN16/25
½", ¾" and 1"	Tri-clamp ends (FTS14-4.5 only).

Note: For alternative connections please consult Spirax Sarco.

SHOPVALVES
GLOBAL VALVE SOLUTIONS | 阀门易购

SHOPVALVES
GLOBAL VALVE SOLUTIONS | 阀门易购

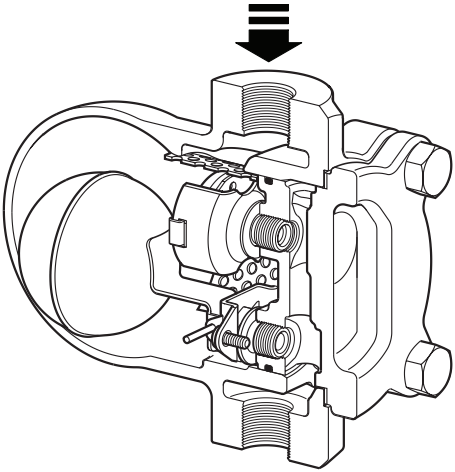

Fig. 1 FTS14X - Screwed (vertical down)

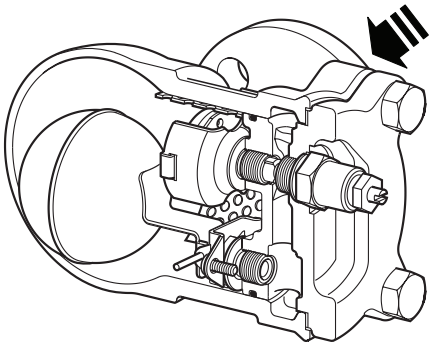

Fig. 2 FTS14-C (R-L) - Flanged

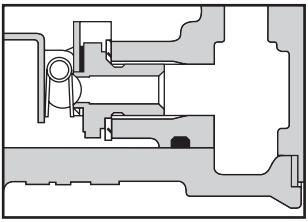

Fig. 3 Section of the main valve assembly - DN25 (1") only

2.3 Materials

Part	Material	
Body and cover	Austenitic stainless steel (316)	EN 10213-4 (1.4408)
		ASTM A351 CF8M
Cover bolts	Stainless steel	BS EN 3506 A2-70
Cover gasket	Reinforced exfoliated graphite	
'O' ring	Viton (FDA approved)	
Internals	Stainless steel	

SHOPVALVES
GLOBAL VALVE SOLUTIONS | 阀门易购

SHOPVALVES
GLOBAL VALVE SOLUTIONS | 阀门易购

2.4 Pressure / temperature limits (ISO 6552)

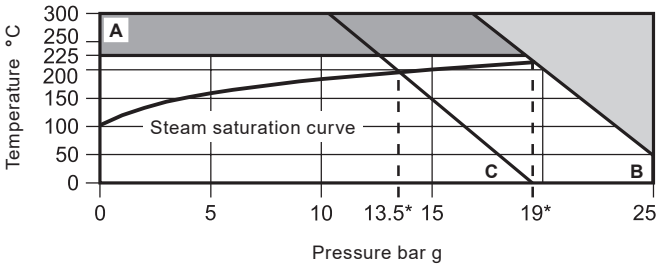

The product **must not** be used in this region.

The product should not be used in this region as damage to the internals may occur.

A - B Flanged PN16, PN25, ASME 300, screwed and socket weld.

A - C Flanged ASME 150.

Note: Tri-clamp compatible end connections, used for hygienic / sanitary applications, are only available on the FTS14-4.5.

Body design conditions				PN25
PMA	Maximum allowable pressure		25 bar g @ 50 °C	(25 psi g @ 122 °F)
TMA	Maximum allowable temperature		300 °C	(572 °F)
Minimum allowable temperature			-20 °C	(-4 °F)
PMO *	Maximum operating pressure for saturated steam service	**A - B**	19 bar g	(275.5 psi g)
		A - C	13.5 bar g	(195.5 psi g)
TMO	Maximum operating temperature		225 °C @ 19 bar g	(437 °F @ 275.5 psi g)
Minimum operating temperature **Note:** For lower operating temperatures consult Spirax Sarco			0 °C	(32 °F)
ΔPMX	Maximum differential pressure	**FTS14-4.5**	4.5 bar	(65 psi)
		FTS14-10	10 bar	(145 psi)
		FTS14-14	14 bar	(203 psi)
Product is safe for use under full vacuum conditions				
Designed for a maximum cold hydraulic test pressure of:			37.5 bar g	(544 psi g)

SHOPVALVES
GLOBAL VALVE SOLUTIONS | 阀门易购

SHOPVALVES
GLOBAL VALVE SOLUTIONS | 阀门易购

3. Installation

Note: Before actioning any installation observe the 'Safety information' in Section 1.

Refering to the Installation and Maintenance Instructions, name-plate and Technical Information Sheet, check that the product is suitable for the intended installation.

3.1 Check materials, pressure and temperature and their maximum values. If the maximum operating limit of the product is lower than that of the system in which it is being fitted, ensure that a safety device is included in the system to prevent overpressurisation.

3.2 Determine the correct installation situation and the direction of fluid flow.

3.3 Remove plastic protective covers from connections.

3.4 If the trap is to discharge to atmosphere ensure that it's to a safe place, the discharging fluid may be at a temperature of 100 °C (212 °F).

3.5 The trap must be fitted with the float arm in a horizontal plane so that it rises and falls vertically. This applies to all installation flow directions.

3.6 Although the standard flow configuration is right to left (R-L) the connection orientation can be changed on site by undoing the four cover bolts and moving the cover to the preferred flow orientation.
Note: A new gasket must always be fitted.
Warning: The cover gasket contains a thin stainless steel support ring which may cause physical injury if not handled and disposed of carefully.

3.7 Traps should be fitted below the outlet of the steam system with a small drop leg immediately preceding the trap - Typically 150 mm (6") see Figure 4. If no drop leg is allowed then it may be possible (under low load conditions) for steam to flow over the condensate in the bottom of the pipe and reach the trap.

3.8 Always fit a non-return (check) valve downstream of any steam traps which discharge into condensate return lines where back pressure is experienced. This is most commonly caused by a rising condensate line. The check valve will prevent the steam space flooding when the inlet pressure is reduced or the steam is shut off. Use a suitable valve such as the Spirax Sarco DCV41, see Figure 4.

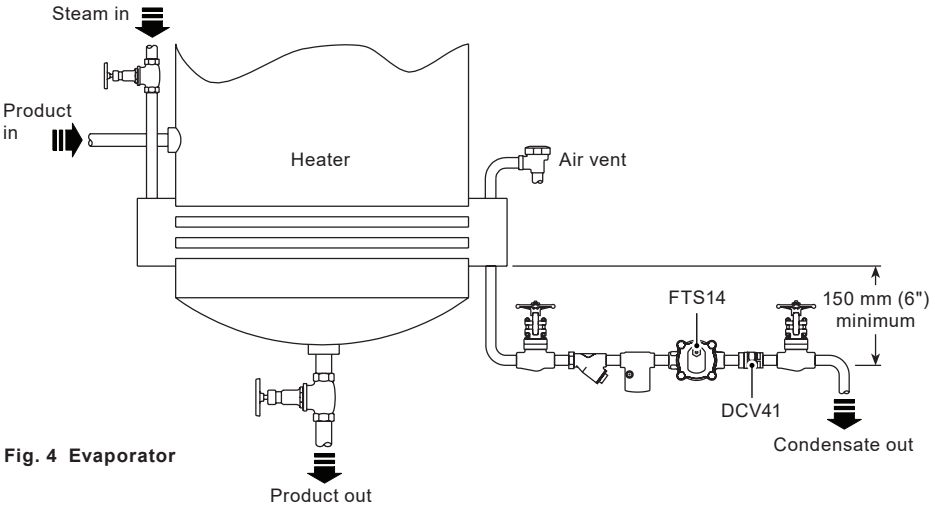

Fig. 4 Evaporator

SHOPVALVES
GLOBAL VALVE SOLUTIONS | 阀门易购

SHOPVALVES
GLOBAL VALVE SOLUTIONS | 阀门易购

3.9 Bypasses are not recommended because they can be left open and can cause the trap to malfunction or allow steam wastage (and possible pressurisation of the condensate return system).

3.10 If the trap is to be welded into the line this should be done using the electric arc method. If this method is used the internals need not be removed. If any other welding method is employed it may cause distortion of the trap body or damage to the internals

3.11 Float traps should be fitted as close as possible to the outlet of the plant to be drained, otherwise the trap can steam lock. Steam locking occurs when the pipe between the condensate outlet and the steam trap fills with steam preventing the condensate from reaching the trap. This can lead to system waterlogging which will affect plant efficiency.
It is very similar to the air locking experienced in water systems.
The most common application where steam locking is a risk, is on rotating cylinders and other applications where condensate is removed via a dip tube or syphon pipe. Steam locking can easily be prevented by fitting the trap with a combined thermostatic air vent and steam lock release valve (SLR).
The SLR valve is opened by turning the spindle anticlockwise. The standard factory setting is a ½ turn open which equates to an approximate steam 'bypass' of 22 kg/h @ 10 bar.
Site adjustment of the SLR can be achieved by turning anticlockwise to increase the bypass flow and clockwise to reduce the flow.
Note: The SLR should not be used to provide 'blowthrough' steam loads which are usually high and may reduce the working life of the trap. If blowthrough steam is required consult Spirax Sarco for further details.

3.12 If a float trap is to be situated in an exposed position, it should be either lagged or drained by a separate, small thermostatic trap.

3.13 Ensure adequate space is left to remove the body from the cover for maintenance.
Minimum withdrawal distance distance for the FTS14 is 135 mm (5.6") for DN15 (½") and DN20 (¾") and 145 mm for the DN25 (1").

4. Commissioning

After installation or maintenance ensure that the system is fully functioning. Carry out tests on any alarms or protective devices.

5. Operation

The float trap is a continuous discharge trap, removing condensate the instant it forms. On start-up, the thermostatic air vent allows air to bypass the main valve preventing the system air binding. Hot condensate will close the air vent tightly, but as soon as it enters the main chamber of the trap, the float rises and the lever mechanism attached to it opens the main valve - keeping the system drained of condensate at all times. When all condensate has been removed, the float drops and closes the main valve. Float traps are renowned for their high start-up load handling capability, clean tight shut-off and resistance to waterhammer and vibration.
On applications that suffer from steam locking an SLR unit should be fitted see Section 3.11.

SHOPVALVES
GLOBAL VALVE SOLUTIONS | 阀门易购

SHOPVALVES
GLOBAL VALVE SOLUTIONS | 阀门易购

6. Maintenance

Note: Before actioning any maintenance programme observe the 'Safety information' in Section 1.

Warning

The cover gasket contains a thin stainless steel support ring which may cause physical injury if not handled and disposed of carefully.

6.1 General information

Before undertaking any maintenance on the trap it must be isolated from both the supply line and return line and any pressure allowed to safely normalise to atmosphere. The trap should then be allowed to cool. When reassembling, ensure that all joint faces are clean.

Note: The following Sections need to be read in conjunction with Figure 5.

6.2 How to fit the main valve assembly

- Undo the cover bolts (**2**). Place two screwdrivers between the body and cover on either side and lever off the body, keeping bolt holes aligned.
- Remove the pivot pin (**14**) and float assembly (**8**).
- Remove the two main valve assembly screws (**7**) and pivot frame (**12**).
- Remove the main valve seat (**5**) and replace with a new seat supplied with new gasket and tighten to the recommended torque (see Table 1).
  Note: A valve spring (**16**) is fitted to the DN25 (1") traps only.
- Refit the pivot frame (**12**) by tightening the assembly set screws (**7**) to the recommended torque (see Table 1). Replace float assembly (**8**) and pivot pin (**14**) .
- Fit a new 'O' ring (**15**) onto the body ensuring that the 'O' ring contact surfaces are all clean and in good condition. Care must be taken to ensure that the 'O' ring is not damaged during assembly. A suitable lubricant may be used to ease assembly.
- Refit the cover using a new gasket (**3**) and tighten the cover bolts (**2**). This is relevant to all configurations.

Table 1 Recommended tightening torques

Item	Part	or mm		N m	(lbf ft)
2	Cover bolts	M10 x 30		20 - 25	(15 - 18)
5	Main valve seat	17 A/F		50 - 55	(37 - 40)
7	Main valve assembly screws	Pozidrive	M4 x 6	2.5 - 3.0	(1.8 - 2.2)
9	Air vent assembly	17 A/F		50 - 55	(37 - 40)
10	SLR assembly, gasket and seal	19 A/F		35 - 40	(25 - 30)
17	Sensor blanking plug	11 A/F		15 - 20	(11 - 15)

SHOPVALVES
GLOBAL VALVE SOLUTIONS | 阀门易购

SHOPVALVES
GLOBAL VALVE SOLUTIONS | 阀门易购

6.3 How to fit the air vent assembly

- Remove the spring clip, element and spacer plate.
- Unscrew the seat (**9**) and remove along with the gasket (**6**).
- Fit a new gasket, seat and frame and tighten to the recommended torque (see Table 1).
- Assemble the spacer plate, fit capsule and clip.
- Align the complete air vent horizontally so that the frame clears the cover.

6.4 How to replace the strainer screen (where fitted)

- Remove the cover bolts (**2**).
- Place two screwdrivers between the body and cover on either side and lever off the body.
- Remove the strainer screen and either clean or replace it.
- Ensure the screen is located securely between the two lugs either side of the outlet passage.
- Refit the body and tighten the bolts to the recommended torque (see Table 1). Always use a new 'O' ring (**15**) and body gasket (**3**).

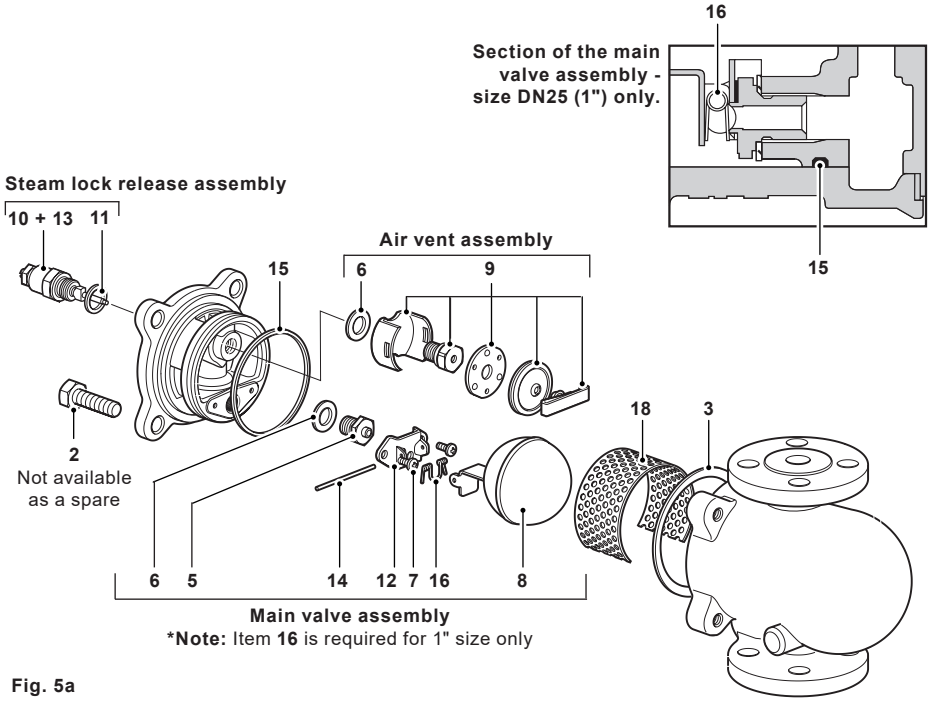

Fig. 5a

SHOPVALVES
GLOBAL VALVE SOLUTIONS | 阀门易购

SHOPVALVES
GLOBAL VALVE SOLUTIONS | 阀门易购

7. Spare parts

The spare parts available are shown in heavy outline. Parts drawn in broken line are not supplied as spares.

Available spares

Maintenance kit	**3**, **5**, **6** (2 off), **7** (2 off), **8**, **9**, **12**, **14**, **16** (1" only), **18**
Gasket set (packet of 3)	**3**, **15**

How to order spares

Always order spares by using the description given in the column headed 'Available spares' and state the size, type of trap and pressure range i.e. 4.5, 10 or 14 bar.
Example: 1 - Maintenance kit for a Spirax Sarco ½" FTS14-4.5 steam trap.

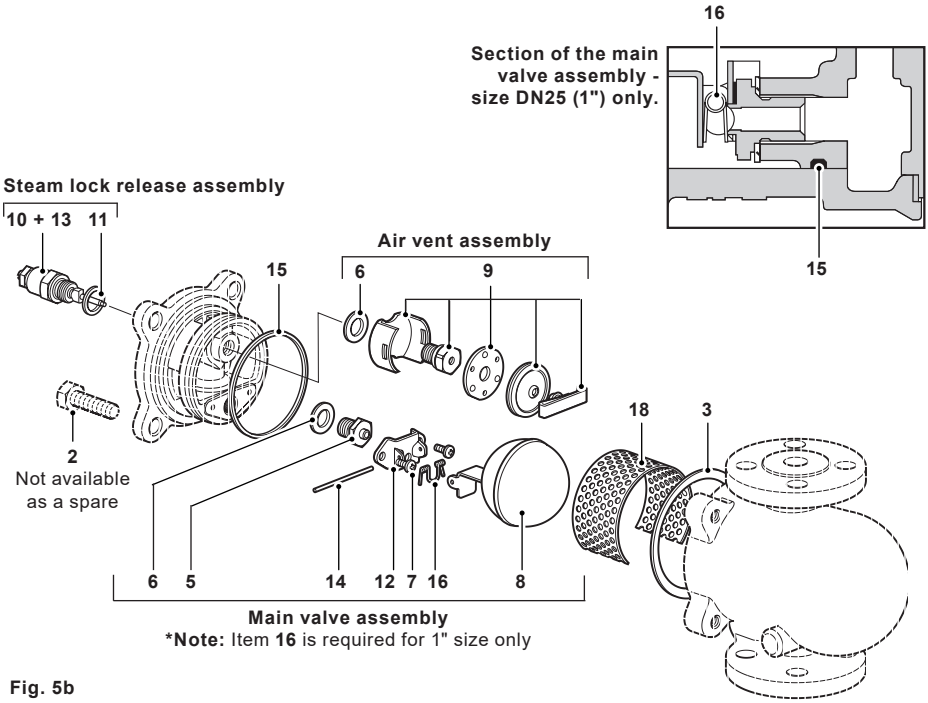

Fig. 5b

SHOPVALVES
GLOBAL VALVE SOLUTIONS | 阀门易购