Local regulations may restrict the use of this product to below the conditions quoted.
In the interests of development and improvement of the product, we reserve the right to change the specification without notice. © Copyright 2025

FTS14
Austenitic Stainless Steel Ball Float Steam Trap

FTS14VX
(Vertical down)

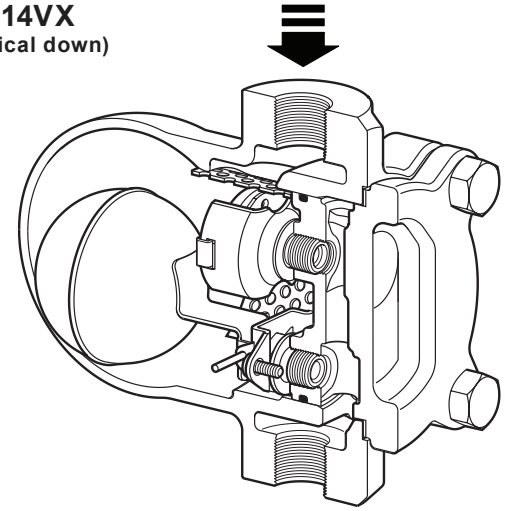

FTS14X-C (R-L)
(Horizontal)

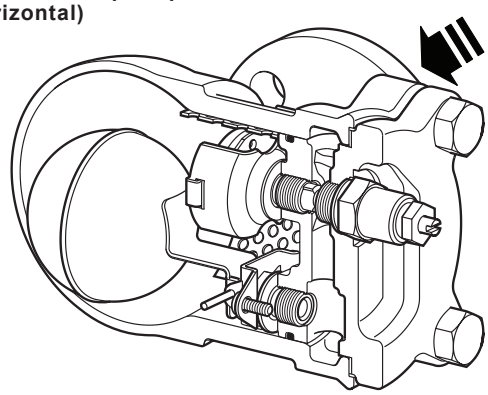

Description
The FTS14 is an austenitic stainless steel ball float steam trap with an integral automatic air vent.
It provides efficient condensate drainage and prompt air removal to ensure process equipment operates to its maximum potential.
As standard the FTS14 has horizontal connections with flow from right to left (R-L). However its unique design allows the cover to be simply rotated to provide horizontal left to right (L-R) and vertical up or vertical down configurations.

Standards
This product fully complies with the requirements of the European Pressure Equipment Directive 2014/68/EU.

Certification
This product is available with certification to EN 10204 3.1.
Note: All certification/inspection requirements must be stated at the time of order placement.

Sizes and pipe connections

½", ¾" and 1"	Screwed BSP T Rp (ISO 7-1) (BS 21 and DIN 2999) or NPT (ASME B 1.20.1).
½", ¾" and 1"	Socket weld ends to ASME B 16.11, BS 3799 Class 3000 and DIN 3239
DN15, 20 and 25	Flanged ends to ASME B 16.5 Class 150 and 300 or EN 1092-1 PN16or PN25.
½", ¾" and 1"	Tri-clamp ends (FTS14-4.5 only).

Note: For alternative connections please consult Spirax Sarco.

Optional extras
Internal strainer (**FTS14X**). A manually adjustable needle valve can be added for use as a steam lock release mechanism (**FTS14-C**).
The cover can be tapped ⅛" BSP T Rp (ISO 7-1) for installation of a temperature sensor.
Note: All options are available at extra cost.

SHOPVALVES
GLOBAL VALVE SOLUTIONS | 阀门易购

Pressure/temperature limits (ISO 6552)

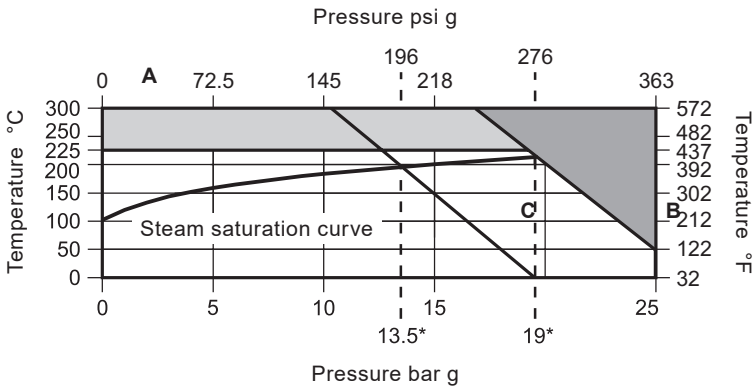

The product **must not** be used in this region.

The product should not be used in this region or beyond its operating range as damage to the internals may occur.

A - B Flanged PN16, PN25, ASME 300, screwed and socket weld.

A - C Flanged ASME 150.

Note: Tri-clamp compatible end connections, used for hygienic / sanitary applications, are only available on the FTS14-4.5.

Body design conditions				PN25
PMA	Maximum allowable pressure		25 bar g @ 50 °C	363 psi g @ 122 °F
TMA	Maximum allowable temperature		300 °C	572 °F
Minimum allowable temperature			-20 °C	-4 °F
PMO	Maximum operating pressure for saturated steam service	**A - B**	19 bar g	276 psi g
		A - C	13.5 bar g	196 psi g
TMO	Maximum operating temperature		225 °C @ 19 bar g	437 °F @ 276 psi g
Minimum operating temperature			0 °C	32 °F
Product is safe for use under full vacuum conditions				
Designed for a maximum cold hydraulic test pressure of:			37.5 bar g	544 psi g
ΔPMX	Maximum differential pressure	**FTS14-4.5**	4.5 bar	65 psi
		FTS14-10	10 bar	145 psi
		FTS14-14	14 bar	203 psi

Note: For lower operating temperatures consult Spirax Sarco.

SHOPVALVES
GLOBAL VALVE SOLUTIONS | 阀门易购

SHOPVALVES
GLOBAL VALVE SOLUTIONS | 阀门易购

Materials

FTS14VX
(Vertical down)

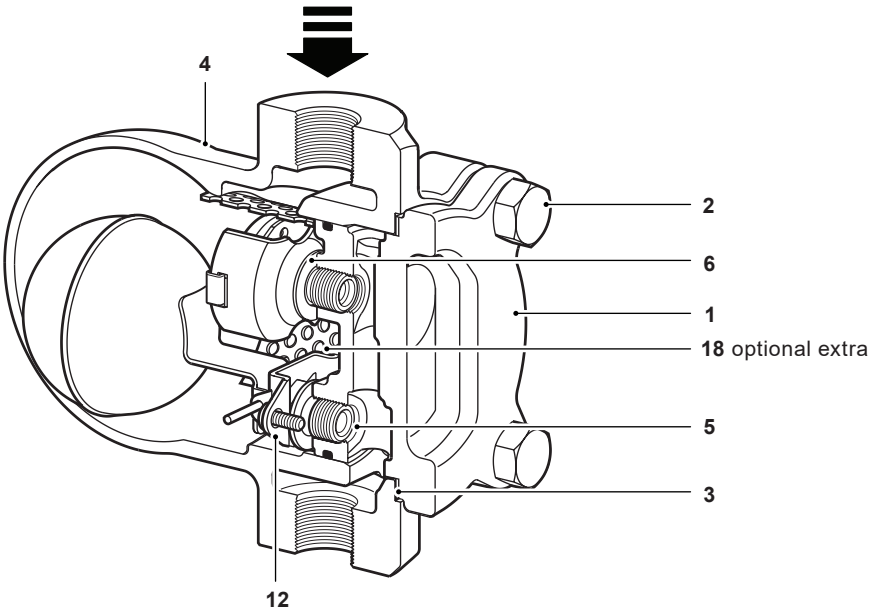

FTS14X-C (R-L)
(Horizontal)

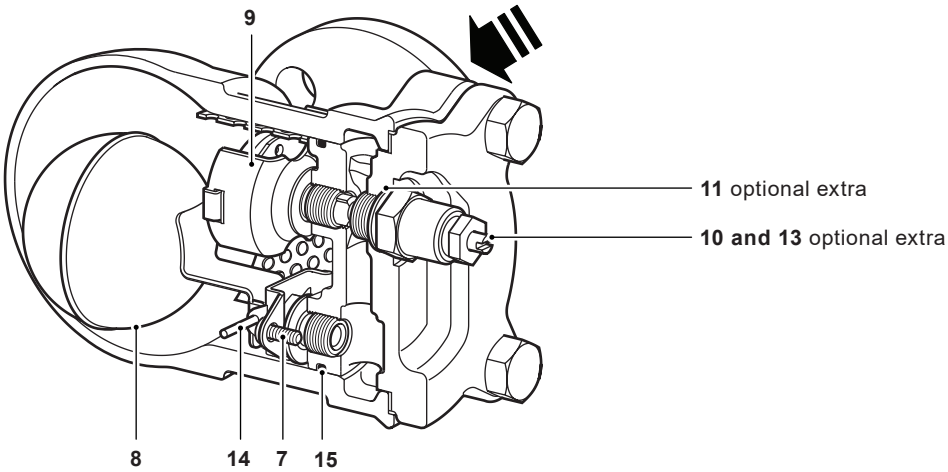

No.	Part	Material	
1	Body	Austenitic stainless steel (316)	EN 10213-4 (1.4408) ASTM A351 CF8M
2	Cover bolts	Stainless steel	BS EN 3506 A2-70
3	Cover gasket	Reinforced exfoliated graphite	
4	Cover	Austenitic stainless steel (316)	EN 10213-4 (1.4408) AS A351 CF8M
5	Main valve seat	Stainless steel	BS 970 431 S29
6	Main valve/air vent seat gasket	Stainless steel	
7	Main valve assembly screws	Stainless steel	
8	Ball float and lever	Stainless steel	BS 1449 304 S16

No.	Part	Material	
9	Air vent assembly	Stainless steel	
10	SLR assembly	Stainless steel	
11	SLR gasket	Stainless steel	
12	Pivot frame	Stainless steel	
13	SLR seal	Graphite	
14	Pivot	Stainless steel	
15	'O' ring	Grey Viton complies with FDA CFR Title 21, Para 177, Section 2600	
16	Valve spring (1" only)	Stainless steel	
17*	Sensor blanking plug	Stainless steel	(optional extra)
18*	Strainer screen	Stainless steel	(optional extra)

***Note: Items 16 and 17 cannot be shown.**

SHOPVALVES
GLOBAL VALVE SOLUTIONS | 阀门易购

SHOPVALVES
GLOBAL VALVE SOLUTIONS | 阀门易购

Dimensions/weights (approximate) in mm (inches) and kg (lbs)

Screwed, Socket weld and Tri-clamp ends (all sizes)

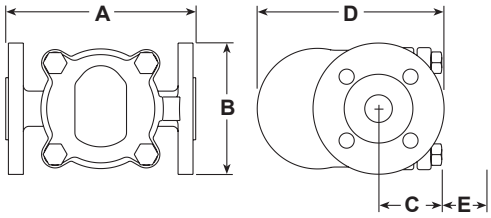

Flanged DN25 (1")

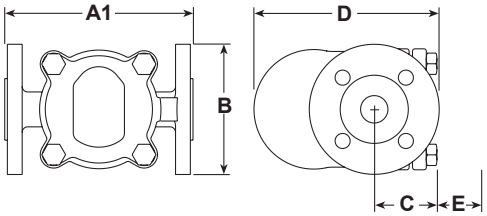

Flanged DN15, DN20 (½", ¾") and FTS14-C

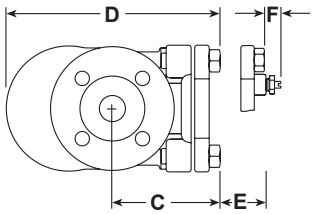

Size	A		A1			B	C	D	E	F	Weight	
	Screwed / SW	Tri-clamp	PN16/25	ASME 150	ASME 300				Withdrawal distance	FTS14-C	Screwed / SW	Flanged
½"	135 (5.31)	180 (7.09)	-	-	-	97 (3.82)	48 (1.89)	162 (6.38)	135 (5.31)	22 (0.87)	3.75 (8.27)	-
¾"												
1"	139 (5.47)	200 (7.87)	-	-	-	113 (4.45)	51 (2.01)	179 (7.05)	145 (5.71)		4.25 (9.37)	-
DN15	-	-	150 (5.91)	147 (5.79)	194 (7.64)	97 (3.82)	77 (3.03)	162 (6.38)	135 (5.31)		-	5.00 (11)
DN20												
DN25	-	-	160 (6.30)	160 (6.30)	204 (8.03)	113 (4.45)	62 (2.44)	179 (7.05)	145 (5.71)		-	6.25 (13.78)

SHOPVALVES
GLOBAL VALVE SOLUTIONS | 阀门易购

SHOPVALVES
GLOBAL VALVE SOLUTIONS | 阀门易购

Capacities

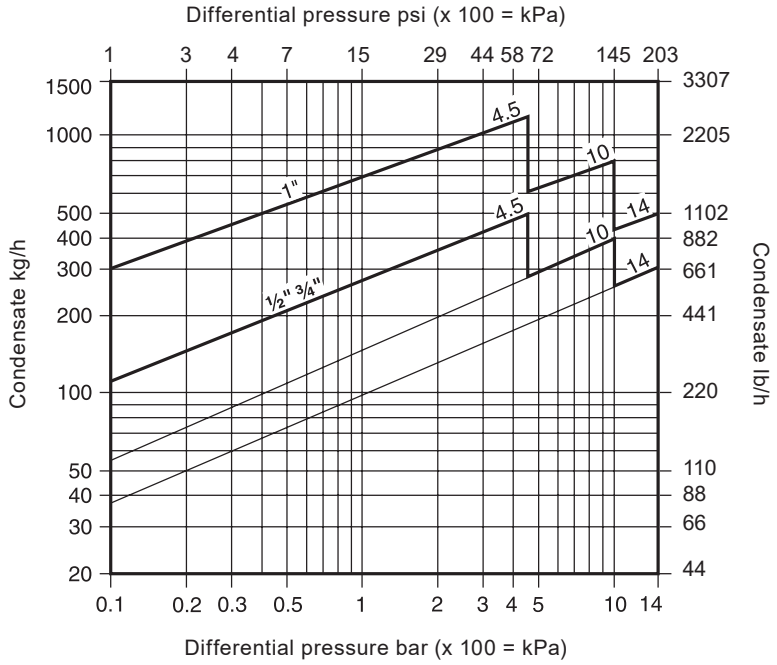

Note. Capacities shown are based on discharge at saturation temperature. When discharging sub-cooled condensate the air vent provides extra capacity. Under start-up conditions the thermostatic air
vent will be open, and will provide additional condensate capacity to the main valve assembly. On 4.5 bar units this will provide a minimum of 50% increased capacity above the hot condensate figures shown.
On 10 and 14 bar (145 and 203 psi) units this will be a minimum increase of 100% on the published capacity.

Safety information, installation and maintenance

For full details see the Installation and Maintenance Instructions (IM-P145-02) supplied with the product.

How to order

Example: 1 off Spirax Sarco ½" FTS14X-4.5 R-L (right to left) stainless steel float trap fitted with screwed BSP T Rp (ISO 7-1) connections. Trap is maintainable in line. Fitted with integral air vent and strainer screen.

SHOPVALVES
GLOBAL VALVE SOLUTIONS | 阀门易购

SHOPVALVES
GLOBAL VALVE SOLUTIONS | 阀门易购

Spare parts

The spare parts available are shown in heavy outline. Parts drawn in a grey line are not supplied as spares.

Available spares

Maintenance kit	**3**, **5**, **6** (2 off), **7** (2 off), **8**, **9**, **12**, **14**, **15**, **16** (1" only), **18**
Gasket set (packet of 3)	**3, 15**

How to order spares

Always order spares by using the description given in the column headed 'Available spares' and state the size, type of trap and pressure range. i.e. 4.5, 10 or 14 bar.

Example: 1 - Maintenance kit for a Spirax Sarco ½" FTS14-4.5 steam trap.

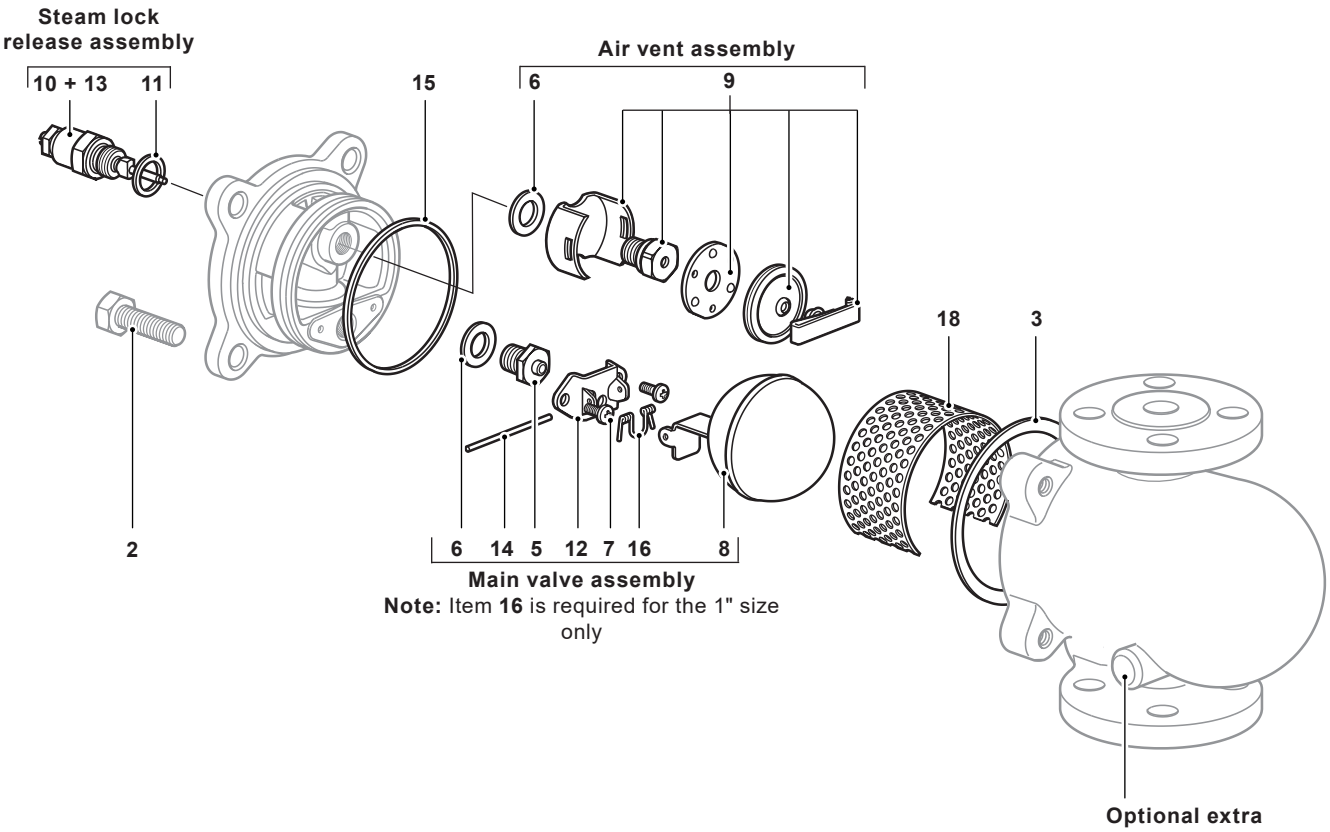

At extra cost the cover can be tapped ⅛" BSP T Rp (ISO 7-1) for installation of a temperature sensor.

Recommended tightening torques

Item	Part	or mm		N m	(lbf ft)
2	Cover bolts		M10 x 30	20 - 25	(15 - 18)
5	Main valve seat	17 A/F		50 - 55	(37 - 41)
7	Main valve assembly screws	pozidrive	M4 x 6	2.5 - 3.0	(1.5 - 2)
9	Air vent assembly	17 A/F		50 - 55	(37 - 41)
10	SLR assembly, gasket and seal	19 A/F		35 - 40	(26 - 30)
17	Sensor blanking plug	11 A/F		15 - 20	(11 - 15)

SHOPVALVES
GLOBAL VALVE SOLUTIONS | 阀门易购