4028151/7

spirax sarco

IM-P402-129
EMM Issue 7

LC1350
Level Controller
Installation and Maintenance Instructions

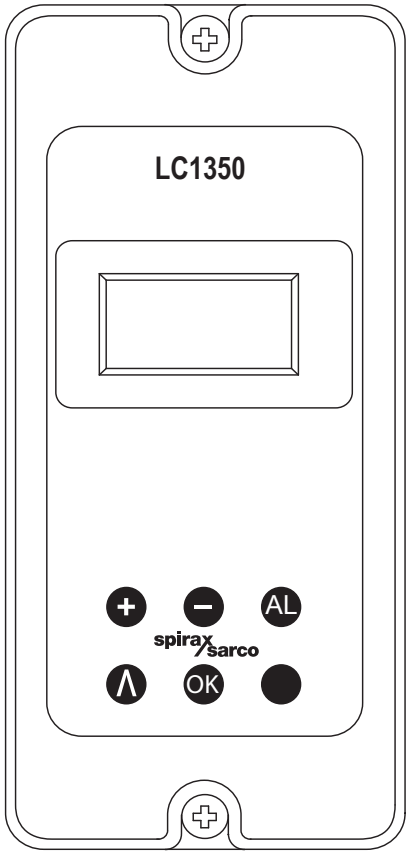

1. Safety information
2. Users instructions and delivery information
3. System overview
4. Mechanical installation
5. Electrical installation
6. Commissioning
7. Communications
8. Maintenance
9. Fault finding
10. Technical information - Default settings
11. Appendix - Data registers
12. Menu map

© Copyright 2017

Printed in GB

SHOPVALVES GLOBAL VALVE SOLUTIONS | 阀门易购

Commissioning password

Current legislation states that in order to prevent tampering and potentially hazardous programming errors, access to the pass codes required to enter commissioning mode should only be available to qualified and trained personnel.

Enter commissioning

To enter the commissioning mode, press and hold the OK button for 5 seconds.

The display will show the pass code '888'. Enter the pass code '745'. This is fixed and cannot be changed.

If an incorrect pass code is entered, the display will return to showing the current valve / pump status – run mode.

If the correct pass code is entered, the display will show the main menu structure. Select 'End' to leave the menu.

Once in the commissioning mode press the ∧ button:

- to scroll through the menus.
- to increase digits when in a menu.

Press the OK button to enter a menu choice (select a parameter or digit) and shift right, onto the next digit.

This page MUST be removed after commissioning and kept in a safe, access controlled location.

SHOPVALVES GLOBAL VALVE SOLUTIONS | 阀门易购

1. Safety information

SHOPVALVES
GLOBAL VALVE SOLUTIONS | 阀门易购

Safe operation of this product can only be guaranteed if it is properly installed, commissioned, used and maintained by qualified personnel (see Section 1.11) in compliance with the operating instructions. General installation and safety instructions for pipeline and plant construction, as well as the proper use of tools and safety equipment must also be complied with.

Your attention is drawn to IEE Regulations (BS 7671, EN 12953, EN 12952 and EN 50156). Elsewhere, other regulations will normally apply.

All wiring materials and methods shall comply with relevant EN and IEC standards where applicable.

Warning

This product is designed and constructed to withstand the forces encountered during normal use. Use of the product other than as a boiler controller, or failure to install the product in accordance with these Instructions, product modifications or repair could:

- **Cause injury or fatality to personnel.**
- **Cause damage to the product / property.**
- **Invalidate the CE marking.**

These instructions must be stored in a safe place near the product installation at all times.

Warning

This product complies with Electromagnetic Compatibility Directive 2014/30/EU and all its requirements.

This product is suitable for Class A Environments (e.g. industrial). A fully detailed EMC assessment has been made and has the reference number UK Supply BH LC1350 2008.

The product may be exposed to interference above the limits of Heavy Industrial Immunity if:

- **The product or its wiring is located near a radio transmitter**
- **Excessive electrical noise occurs on the mains supply. Power line protectors (ac) should be installed if mains supply noise is likely. Protectors can combine filtering, suppression, surge and spike arrestors.**
- **Cellular telephones and mobile radios can cause interference if used withing approximately 1 metre (39") of the product or its wiring. The actual separation distance necessary will vary according to the surroundings of the installation and the power of the transmitter.**

This product complies with Low Voltage Directive 2014/35/EU by meeting the standards of:

- **EN 61010-1:2010 safety requirements for electrical equipment for measurement, control and laboratory use.**

SHOPVALVES
GLOBAL VALVE SOLUTIONS | 阀门易购

SHOPVALVES
GLOBAL VALVE SOLUTIONS | 阀门易购

Static precautions (ESD)

Static precautions must be observed at all times to avoid damage to the product.

Level control and level limiting products in steam boilers

Products / systems must be selected, installed, operated, and tested in accordance with:

- **Local or National standards and regulations.**
- **Guidance Notes, (Health and Safety Executive BG01 and INDG436 in GB).**
- **The requirements of Approvals Authorities.**
- **Boiler Inspection Bodies.**
- **Boiler manufacturer's specifications.**

Two independent low water limiting systems must be installed on steam boilers. Level probes must be installed in separate protection tubes / chambers, with sufficient clearance between the tips, and earth.

Each probe must be connected to an independent controller. The alarm relays must isolate the boiler heat supply at low alarm status.

A high water alarm may be part of the water level control, or a separate system. An independent high water alarm system must be fitted if it is considered a safety requirement.

In this case, the relays must simultaneously isolate the feedwater supply and the boiler heat supply at high alarm status. All boiler water limiters require regular functional testing.

The level probe and controller is only part of the safety system. To complete the system, additional circuitry (wiring, relays, alarm bell / lamp etc.) is required.

A suitable water treatment regime must be used to ensure continuous safe and correct operation of the control and limiter systems. Consult the above authorities and a competent water treatment company.

SHOPVALVES
GLOBAL VALVE SOLUTIONS | 阀门易购

SHOPVALVES
GLOBAL VALVE SOLUTIONS | 阀门易购

Symbols

Equipment protected throughout by double insulation or reinforced insulation.

Functional earth (ground) terminal, to enable the product to function correctly.
Not used to provide electrical safety.

Clean earth / ground.

Safety earth.

Caution, risk of electric shock.

Caution, risk of danger, refer to accompanying documentation.

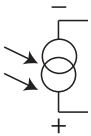

Optically isolated current source or sink.

Caution, Electrostatic Discharge (ESD) sensitive circuit. Do not touch or handle without proper electrostatic discharge precautions.

ac, alternating current.

SHOPVALVES
GLOBAL VALVE SOLUTIONS | 阀门易购

SHOPVALVES
GLOBAL VALVE SOLUTIONS | 阀门易购

1.1 Intended use

i) Check that the product is suitable for use with the intended fluid.

ii) Check material suitability, pressure and temperature and their maximum and minimum values. If the maximum operating limits of the product are lower than those of the system in which it is being fitted, or if malfunction of the product could result in a dangerous overpressure or overtemperature occurrence, ensure a safety device is included in the system to prevent such over-limit situations.

iii) Determine the correct installation situation and direction of fluid flow.

iv) Spirax Sarco products are not intended to withstand external stresses that may be induced by any system to which they are fitted. It is the responsibility of the installer to consider these stresses and take adequate precautions to minimise them.

v) Remove protection covers from all connections and protective film from all name-plates, where appropriate, before installation on steam or other high temperature applications.

1.2 Access

Ensure safe access and if necessary a safe working platform (suitably guarded) before attempting to work on the product. Arrange suitable lifting gear if required.

1.3 Lighting

Ensure adequate lighting, particularly where detailed or intricate work is required.

1.4 Hazardous liquids or gases in the pipeline

Consider what is in the pipeline or what may have been in the pipeline at some previous time. Consider: flammable materials, substances hazardous to health, extremes of temperature.

1.5 Hazardous environment around the product

Consider: explosion risk areas, lack of oxygen (e.g. tanks, pits), dangerous gases, extremes of temperature, hot surfaces, fire hazard (e.g. during welding), excessive noise, moving machinery.

1.6 The system

Consider the effect on the complete system of the work proposed. Will any proposed action (e.g. closing isolation valves, electrical isolation) put any other part of the system or any personnel at risk?
Dangers might include isolation of vents or protective devices or the rendering ineffective of controls or alarms. Ensure isolation valves are turned on and off in a gradual way to avoid system shocks.

1.7 Pressure systems

Ensure that any pressure is isolated and safely vented to atmospheric pressure. Consider double isolation (double block and bleed) and the locking or labelling of closed valves. Do not assume that the system has depressurised even when the pressure gauge indicates zero.

1.8 Temperature

Allow time for temperature to normalise after isolation to avoid danger of burns.

SHOPVALVES
GLOBAL VALVE SOLUTIONS | 阀门易购

SHOPVALVES
GLOBAL VALVE SOLUTIONS | 阀门易购

1.9 Tools and consumables

Before starting work ensure that you have suitable tools and / or consumables available. Use only genuine Spirax Sarco replacement parts.

1.10 Protective clothing

Consider whether you and / or others in the vicinity require any protective clothing to protect against the hazards of, for example, chemicals, high / low temperature, radiation, noise, falling objects, and dangers to eyes and face.

1.11 Permits to work

All work must be carried out or be supervised by a suitably competent person.
Installation and operating personnel should be trained in the correct use of the product according to the Installation and Maintenance Instructions.
Where a formal 'permit to work' system is in force it must be complied with. Where there is no such system, it is recommended that a responsible person should know what work is going on and, where necessary, arrange to have an assistant whose primary responsibility is safety.
Post 'warning notices' if necessary.

1.12 Handling

Manual handling of large and / or heavy products may present a risk of injury. Lifting, pushing, pulling, carrying or supporting a load by bodily force can cause injury particularly to the back. You are advised to assess the risks taking into account the task, the individual, the load and the working environment and use the appropriate handling method depending on the circumstances of the work being done.

1.13 Residual hazards

In normal use the external surface of the product may be very hot.
Many products are not self-draining. Take due care when dismantling or removing the product from an installation.

1.14 Freezing

Provision must be made to protect products which are not self-draining against frost damage in environments where they may be exposed to temperatures below freezing point.

1.15 Disposal

On disposal of the unit or component, appropriate precautions should be taken in accordance with Local / National regulations.

Unless otherwise stated in the Installation and Maintenance Instructions this product is recyclable and no ecological hazard is anticipated with its disposal providing due care is taken.

1.16 Returning products

Customers and stockists are reminded that under EC Health, Safety and Environment Law, when returning products to Spirax Sarco they must provide information on any hazards and the precautions to be taken due to contamination residues or mechanical damage which may present a health, safety or environmental risk. This information must be provided in writing including Health and Safety data sheets relating to any substances identified as hazardous or potentially hazardous.

SHOPVALVES
GLOBAL VALVE SOLUTIONS | 阀门易购

SHOPVALVES
GLOBAL VALVE SOLUTIONS | 阀门易购

2. User Instructions and delivery information

Certain computer programs contained in this product were developed by Spirax-Sarco Limited ("the Work(s)").

Copyright © Spirax-Sarco Limited 2017

All rights reserved

Spirax-Sarco Limited grants the legal user of this product (or device) the right to use the Work(s) solely within the scope of the legitimate operation of the product (or device). No other right is granted under this licence. In particular and without prejudice to the generality of the foregoing, the Work(s) may not be used, sold, licensed, transferred, copied or reproduced in whole or in part or in any manner or form other than as expressly granted here without the prior written consent of Spirax-Sarco Limited.

2.1 General description

The LC1350 is an on / off level controller for conductive liquids. It has two alarm channels that can be independently configured high or low.

WARNING: The minimum conductivity when used with the LP10 - 4 level probe is 1 µS / cm at 25 °C.

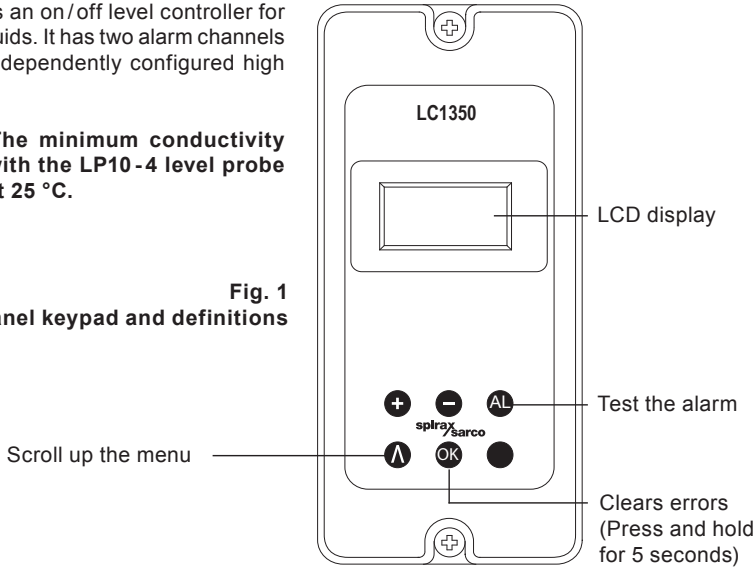

Fig. 1
Front panel keypad and definitions

2.2 Front panel

The front panel has a 3-digit LCD and a keypad.

2.3 Using the buttons

Press the ∧ button:

- To scroll through the menus.
- Press the OK button to enter commissioning mode (press and hold for five seconds).
- The AL button can be used to test the alarm relay and the external circuits.

SHOPVALVES
GLOBAL VALVE SOLUTIONS | 阀门易购

SHOPVALVES
GLOBAL VALVE SOLUTIONS | 阀门易购

2.4 LCD display

Run mode is the normal working mode, and shows what the system is doing.
It indicates whether:

- an alarm condition is present.
- the pump is operating (on / off control).

Moving segments show whether the water is rising or falling due to pump action. A single static segment indicates the pump is off. The top row of buttons is used to switch the pump on, or to test the alarm.

Alarm

AL — Indicates the alarm relay has been de-energised / released.
Note: The pump status display is not shown if an alarm condition is present.

tSt — The operator is testing the alarm relay.

AL 1 or AL2 or AL 1 AL2 — The level has exceeded the alarm level.

Water level rising – pumping in

Pumping in mode, pump on - vessel filling.

PP_ PP_ PP_ — The moving segment display shows that the level is rising.

Water level falling – pumping out

Pumping out mode, pump on ~ vessel draining.

PP_ PP_ PP_ — The moving segment display shows that the level is falling.

Pump off

Water level between pump on / pump off positions.

PP_ — Segment does not move, or pump is not being used (oFF).

SHOPVALVES
GLOBAL VALVE SOLUTIONS | 阀门易购

SHOPVALVES
GLOBAL VALVE SOLUTIONS | 阀门易购

2.5 View parameter mode

Press the ⓐ button in run mode to view and step through the parameters selected. Each parameter will remain on view for a further 2 minutes unless the button is pressed again.

2.6 Alarm / error display messages

If an error occurs, an error menu 'ErX' will be displayed at the end of the parameter screens. Pressing and holding the OK button for 3 seconds can clear a message and re-energize the alarm relay(s). If the cause has not been corrected, the same error message will reappear. If the error or alarm is of a latching type, only the message will disappear. The alarm relay will remain de-energised until the correct passcode is entered in the commissioning menu. If more than one error or alarm has occurred, the next message will appear (in priority order) after the previous one has been cleared. See Section 9 - Fault finding.

2.7 Equipment delivery, handling and storage

Factory shipment

The product is tested, calibrated and inspected prior to shipment, to ensure reliable operation.

Receipt of shipment

Each carton should be inspected at the time of delivery for possible external damage. Any visible damage should be recorded immediately on the carrier's copy of the delivery slip.

Each carton should be unpacked carefully and its contents checked for damage. If it is found that some items have been damaged or are missing, notify Spirax Sarco immediately and provide full details. In addition, damage must be reported to the carrier with a request for their on-site inspection of the damaged item and its shipping carton.

Storage

If the product is to be stored for a period prior to installation, the environmental storage conditions should be at a temperature between 0 °C and 65 °C (32°F and 149°F), and between 10% and 90% relative humidity (non-condensing).

Before installing and connecting the power ensure there is no condensation within the unit.

Operators instructions

An alternative operator instruction manual, in place of this manual, for operating the equipment is required. This will avoid the commissioning menu passcode being disclosed to the operator.

The alarm reset passcode may optionally be disclosed if this is deemed necessary.

SHOPVALVES
GLOBAL VALVE SOLUTIONS | 阀门易购

SHOPVALVES
GLOBAL VALVE SOLUTIONS | 阀门易购

3. System overview

3.1 Function

The LC1350 controls the water level of a boiler, tank or vessel, by operating a pump or solenoid. Two alarm channels are provided, and can be configured high or low.

The controller reacts to a change in probe conductivity (open / closed circuit) and energises / de-energises a relay. This action switches a pump or sounds an alarm.

3.2 Operation

- Pump on / pump off control.
- Two alarm outputs.

3.3 Inputs

The product input options are:

- High alarm or low alarm from a single conductivity probe.
- Pump on / off control from two conductivity probes.

3.4 Other features

Additional delays can be selected to increase the damping effect for turbulent conditions.

To prevent unwanted or inadvertent changes being made, all commissioning parameters are protected with a pass code.

The product can communicate via an infrared link between adjacent boiler house controllers (Spirax Sarco products only). It is designated as a slave unit only – see Section 7 – 'Communications'.

3.5 Typical applications

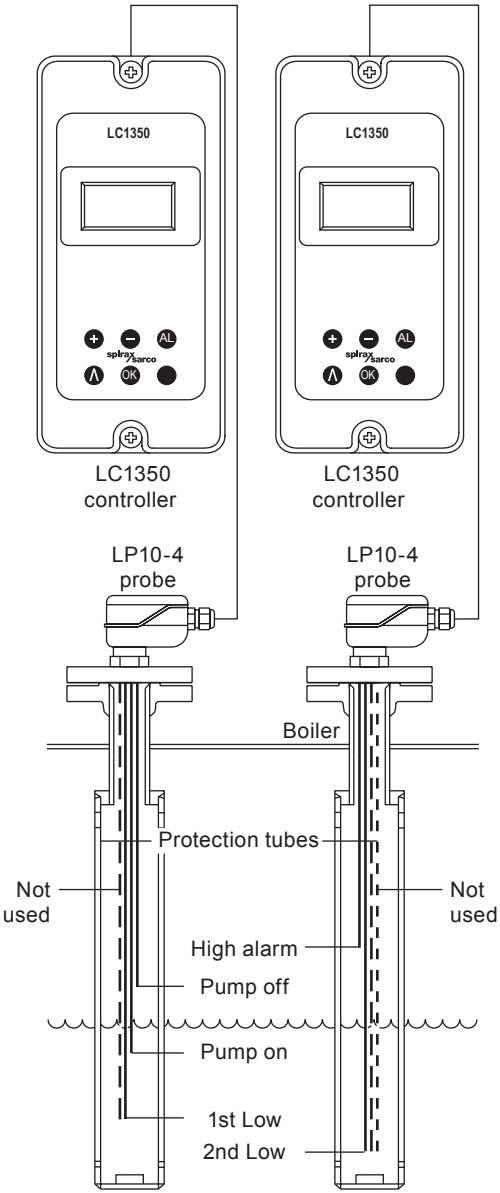

Note: probes can be mounted in external chambers if boiler mounting is not possible.

Fig. 2

SHOPVALVES
GLOBAL VALVE SOLUTIONS | 阀门易购

SHOPVALVES
GLOBAL VALVE SOLUTIONS | 阀门易购

4. Mechanical installation

Note: Read the 'Safety information' in Section 1 before installing the product.

The product must be installed in a suitable industrial control panel or fireproof enclosure to provide impact and environmental protection. A minimum of IP54 (EN 60529) or Type 3, 3S, 4, 4X, 6, 6P and 13 (UL50/NEMA 250) is required. If installed in a harsh environment (conductive dust and / or wet conditions), extra protection is required.

During installation or maintenance, the rear of the product **must** be protected from environmental pollutants entering the product. Alternatively, the tasks can be performed in a dry clean environment.

Caution 1: The product must only be installed in the vertical orientation.

Caution 2: Do not cover or obstruct the infrared beam between products.

Ensure that the display can be easily read by the operator.

Warning: The boiler control panel or enclosure doors must be kept closed at all times unless installation or maintenance work is being carried out.

4.1 Environmental conditions

Install the product in an environment that minimises the effects of heat, vibration, shock and electrical interference (see Section 1 – 'Safety information').

Do not install the product outdoors without additional weather protection.

Do not attempt to open the product – it is sealed and has no replaceable parts or internal switches.

4.2 Installation on a DIN rail

The product is provided with a clip and a set of self-tapping screws to secure it to a 35 mm DIN rail. On the rear of the enclosure, two sets of holes are provided to give two height positions. The clip can be adjusted to give further positions. Locate the clip onto one set of holes and secure it using the two screws provided. Ensure the spring clip is fully engaged with the rail.

Warning: Only use the screws provided with the product.

SHOPVALVES
GLOBAL VALVE SOLUTIONS | 阀门易购

SHOPVALVES
GLOBAL VALVE SOLUTIONS | 阀门易购

4.3 Installation on a chassis plate:

- Drill holes in chassis plate as shown in Figure 3.
- Fit unit to chassis plate and secure with 2 screws, nuts and washers, using the slots provided at the top and bottom of the case.

Warning: Do not drill the product case or use self-tapping screws.

4.4 Installation in a panel cutout:

(Minimum panel thickness 1 mm if the bezel is used).

- The product has integral threaded inserts (M4 x 0.7) at the top and bottom of the front panel.
- Two M4 x 25 mm screws are provided, together with fibre washers and a bezel.

Warning:
Do not use screws over 25 mm in length - danger of electric shock.

- Cut the panel to the dimensions given in Figure 3. Drill the screw holes in the panel in the positions indicated.
- Remove the backing from the gasket supplied and apply to front face of the product.
- The bezel can be used to enhance the appearance of the panel cutout. If required, fit this to the outside of the panel.
- Fit the unit from the rear of the panel, and secure using the screws, washers (and bezel) provided.
- Tighten the M4 screws to 1.0 - 1.2 Nm.

Warning: Do not drill the product case or use self-tapping screws.

Fixing template cutout notes:

- Solid line indicates cutout required for panel mounting.
- Broken line indicates product outline.
- A minimum gap of 15 mm between units must be provided for product cooling.
- Mounting hole dimensions are the same for both panel and wall mounting.

SHOPVALVES
GLOBAL VALVE SOLUTIONS | 阀门易购

SHOPVALVES
GLOBAL VALVE SOLUTIONS | 阀门易购

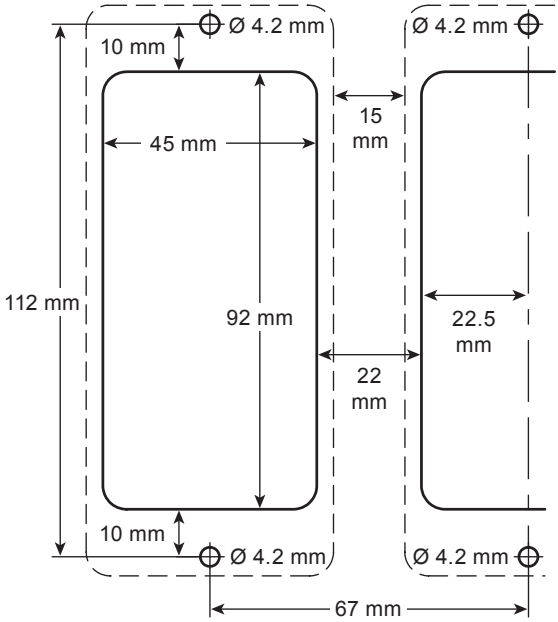

Fig. 3
Chassis plate / panel - cutout diagram

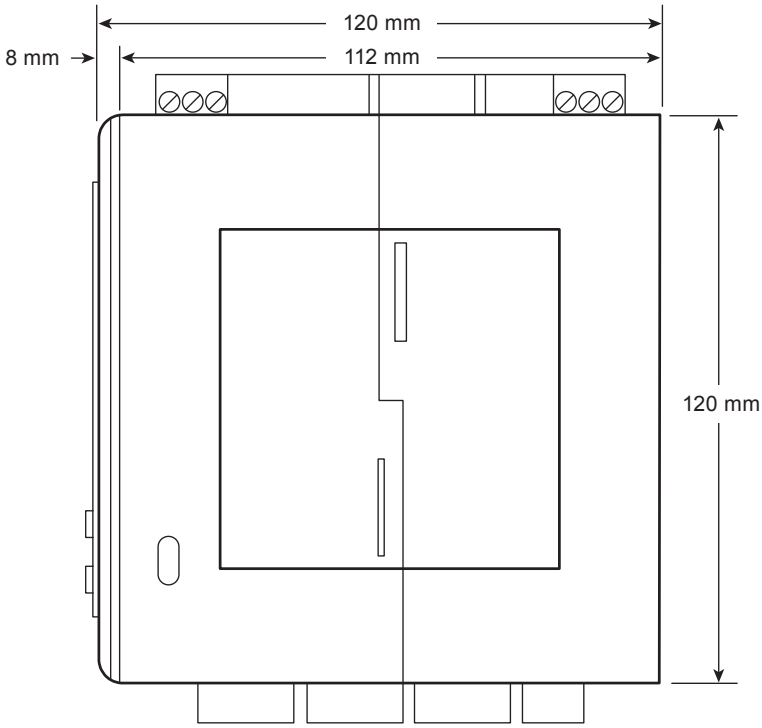

SHOPVALVES
GLOBAL VALVE SOLUTIONS | 阀门易购

SHOPVALVES
GLOBAL VALVE SOLUTIONS | 阀门易购

5. Electrical installation

Note: Before installing read the 'Safety Information' in Section 1.

Warning:
Isolate the mains supply before touching any of the wiring terminals as these may be wired to hazardous voltages.
Use only the connectors supplied with the product, or spares obtained from Spirax Sarco Limited. Use of different connectors may compromise product safety and approvals. Ensure there is no condensation within the unit before installing and connecting the power.
Connecting the mains supply incorrectly can cause damage and may compromise safety.

5.1 General wiring notes

Every effort has been made during the design of the product to ensure the safety of the user but the following precautions must be observed:

1. Maintenance personnel must be suitably qualified to work with equipment having hazardous live voltages.
2. Ensure correct installation. Safety may be compromised if the installation of the product is not carried out as specified in this IMI.
3. The design of the product relies on the building installation for overcurrent protection and primary isolation.
4. Overcurrent protection devices rated at 3 amps must be included in all phase conductors of the installation wiring. If overcurrent protection is included in both supply wires then the operation of one must also cause the operation of the other. Refer to IEC 60364 (Electrical Installations of Buildings) or National or Local standards for full details of requirements for overcurrent protection.
5. A 3 A quick-blow overcurrent protection device must be fitted to the relay circuit(s).
6. Relay contacts must be supplied on the same phase as the mains supply.
7. The product is designed as an installation category III product.
8. Install wiring in accordance with:
   - IEC 60364 - Low-voltage electrical installations.
   - EN 50156 Electrical Equipment for furnaces and ancillary equipment.
   - BS 6739 - Instrumentation in Process Control Systems: Installation design and practice or local equivalent.
   - National and Local Electrical Code (NEC) or Canadian code (CEC) for the US and Canadian markets. Note; use NEC Class 1 wire with a temperature rating greater than 75 °C. If the cable is to be exposed to a higher temperature, then a higher temperature rating needs to be selected.

SHOPVALVES
GLOBAL VALVE SOLUTIONS | 阀门易购

SHOPVALVES
GLOBAL VALVE SOLUTIONS | 阀门易购

9. It is important that the cable screens are connected as shown in order to comply with the electromagnetic compatibility requirements.

10. All external circuits must meet and maintain the requirements of double / reinforced installation as stated in IEC 60364 or equivalent.

11. Additional protection must be provided to prevent accessible parts (e.g. signal circuits) from becoming Hazardous Live if a wire or screw is accidentally loosened or freed. Ensure all wires are secured to at least one other wire from the same circuit. The attachment must be as close to the terminal block as possible but must not apply undue stress on the connection. Example: Use a cable tie to secure the live and neutral wire together. If one wire becomes loose the other wire will prevent it from touching accessible parts.

12. A disconnecting device (switch or circuit breaker) must be included in the building installation. It must:

- Have a rating with sufficient breaking capacity.
- Be in close proximity to the equipment, within easy reach of the operator, but not fitted in a position that makes it difficult to operate.
- Disconnect all phase conductors.
- Be marked as the disconnecting device for the product.
- Not interrupt a protective earth conductor.
- Not be incorporated into a mains supply cord.
- Comply with the requirements for a disconnecting device specified in IEC 60947-1 (Specification for low-voltage switchgear and control gear – General rules) and IEC 60947-3 (Switches, disconnectors, switch-disconnectors and fuse-combination units).

13. See Section 10 - 'Technical information' for terminal and cable specification.

SHOPVALVES
GLOBAL VALVE SOLUTIONS | 阀门易购

SHOPVALVES
GLOBAL VALVE SOLUTIONS | 阀门易购

5.2 Mains wiring notes:

1. Read Section 5.1 before attempting to wire the supply to the product.
2. The wiring connections are identified on the terminal plugs.
3. Fuses should be fitted in all live conductors (see Figures 4 and 5).
4. Double or reinforced insulation must be maintained between:
   - Hazardous live conductors (mains and relays circuits) and
   - Safety extra low voltages (All other components/ connectors/ conductors).
5. The wiring diagrams show relays and switches in the **Power Off** position.

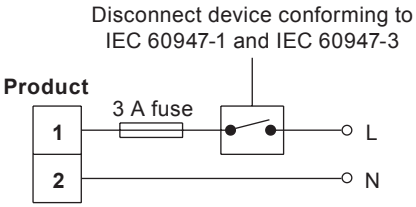

Fig. 4

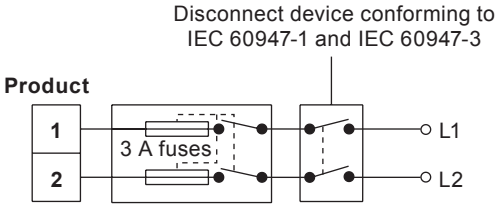

Fig. 5

SHOPVALVES
GLOBAL VALVE SOLUTIONS | 阀门易购

SHOPVALVES
GLOBAL VALVE SOLUTIONS | 阀门易购

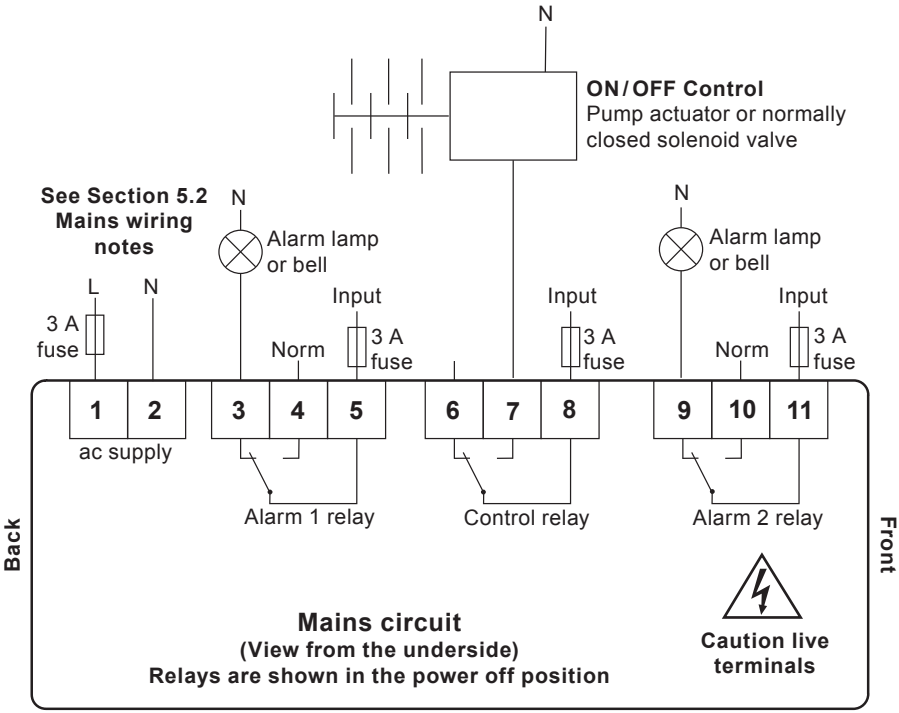

Fig. 6 Mains circuit

SHOPVALVES
GLOBAL VALVE SOLUTIONS | 阀门易购

SHOPVALVES
GLOBAL VALVE SOLUTIONS | 阀门易购

5.3 Signal wiring notes

An earth current loop is created if a wire or screen is connected between two earth points that are at different potential (voltage). If the wiring diagram is followed correctly, the screen will only be connected to the earth at one end.

The earth terminal is a functional earth rather than a protective earth.

A protective earth provides protection from electric shock under a single fault condition. This product has double insulation and therefore does not require a protective earth. A functional earth is used in order for the product to operate. In this application, the earth is used as a sink or drain for any electrical interference. The earth terminal must be connected to a local earth in order to conform to the EMC directive.

Warning:
The earth lead is internally connected to the probe body and therefore earthed via the NPT or BSP thread. Do not connect this earth pin to other earths.

5.4 Probe wiring

The maximum cable length for all transducers is 100 m (328 ft).

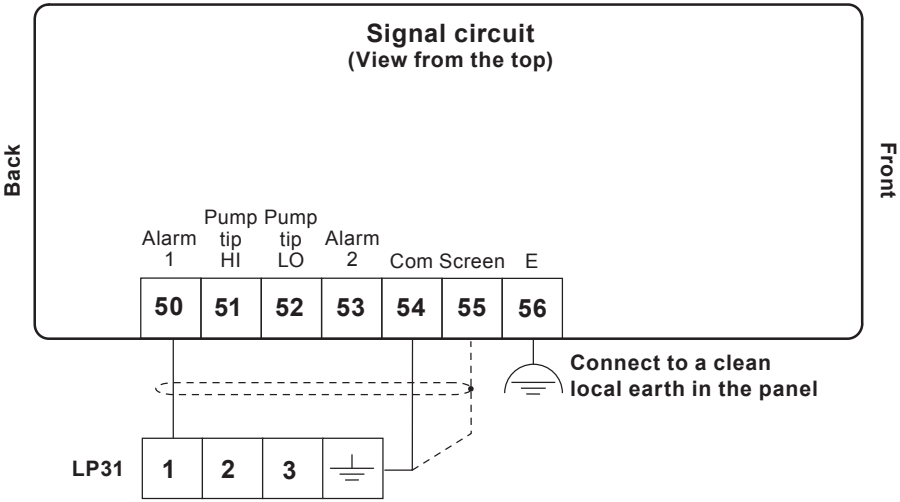

Fig. 7 Signal circuit LP31

SHOPVALVES
GLOBAL VALVE SOLUTIONS | 阀门易购

SHOPVALVES
GLOBAL VALVE SOLUTIONS | 阀门易购

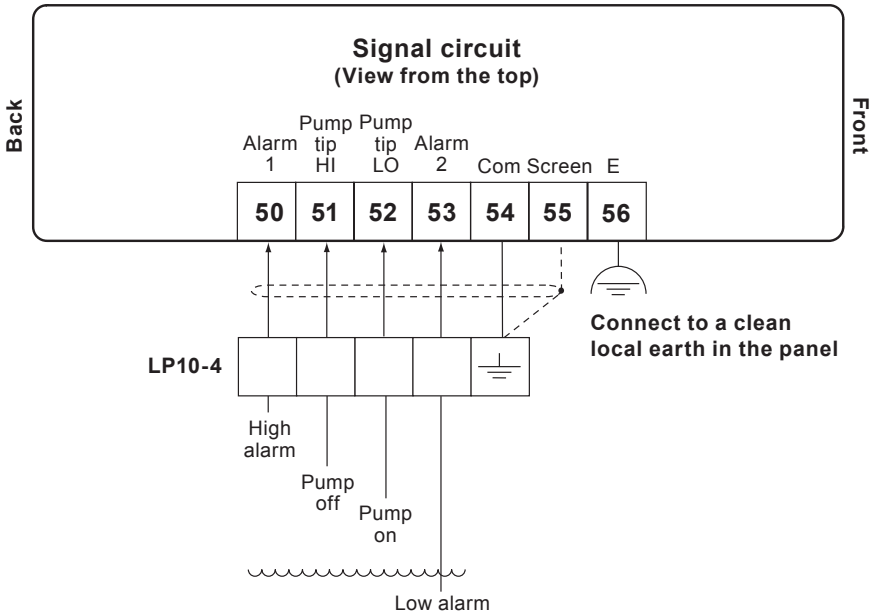

Fig. 8 Signal circuit LP10-4 - Pumping-in with one high alarm and one low alarm

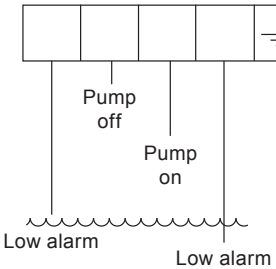

Fig. 9 LP10-4 - Pumping in with two low alarms

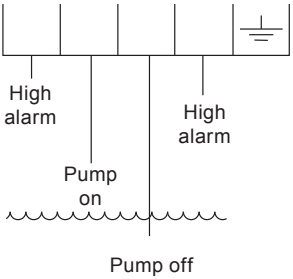

Fig. 10 LP10-4 - Pumping out with two high alarms

SHOPVALVES
GLOBAL VALVE SOLUTIONS | 阀门易购

SHOPVALVES
GLOBAL VALVE SOLUTIONS | 阀门易购

5.5 Optional external test switch wiring diagram

If an external test switch is required, it is possible to wire in a panel mounted switch as shown in Figure 11. For high alarm a Normally Open (NO) switch is used to connect the tip to the probe body. For low alarm a Normally Closed (NC) switch is used to disconnect the probe tip from the controller. In order to prevent continuous alarms a spring-loaded, or a key operated switch is recommended.

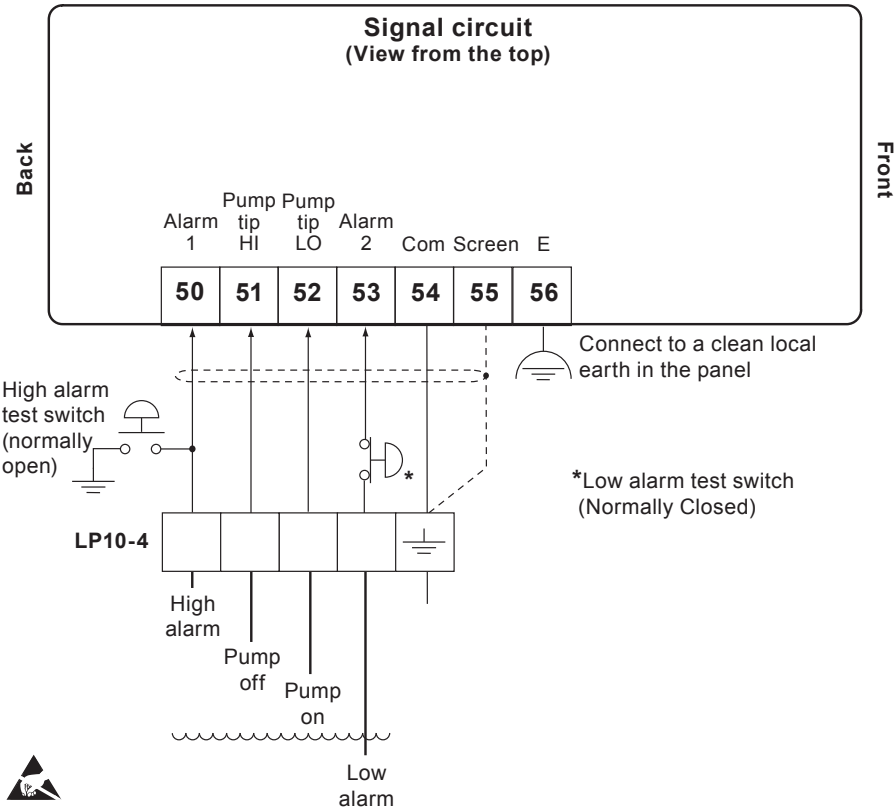

Note:
Do not connect terminal 55 to any other earth.
Ensure resistance from the probe body to the pipework/boiler shell is less 1 ohm.
E = Functional earth. Connect these pins to earth local to the panel.

Fig. 11 Signal circuit LP10-4 - Pumping-in with one high and one low alarm

SHOPVALVES
GLOBAL VALVE SOLUTIONS | 阀门易购

SHOPVALVES
GLOBAL VALVE SOLUTIONS | 阀门易购

6. Commissioning

6.1 General information

All commissioning for the product is carried out via the front panel.

Warning: On entering the commissioning mode the product will cease normal control. The control relay will switch off the pump. For safety, the alarm relay will continue to operate as normal. To regain normal control, return to the run menu by selecting end.

Warning: If during commissioning, the buttons are not pressed for over 5 minutes, the controller will revert to run mode and an error will be displayed. If the commissioning was incomplete the controller may not provide the correct control.

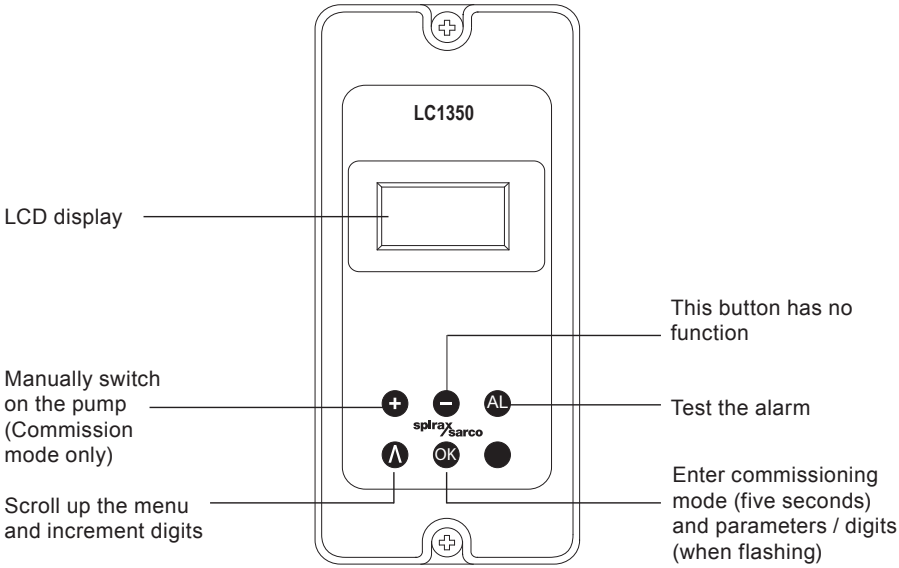

Fig. 12
Display screen and keypad

6.2 The product has no battery

The programmed settings are held in non-volatile memory (flash) and are written to after changing a parameter and pressing the OK button.

SHOPVALVES
GLOBAL VALVE SOLUTIONS | 阀门易购

SHOPVALVES
GLOBAL VALVE SOLUTIONS | 阀门易购

6.3 Commissioning - Full

Warning

It is essential that you comply with National / Local regulations and Guidance notes, and the boiler manufacturers' recommendations. It is imperative that the settings you have accepted will allow the boiler to operate in a safe manner.

Enter commissioning as stated in Section 2, and follow Section 6.3.1 'Main menu structure' to make the changes required.

6.3.1 Main menu structure

AL 1	selects off, hi or lo alarm signal.
AL2	selects off, hi or lo alarm signal.
Pu	selects off, pumping in or pumping out.
dEL	selects input damping level (wave filter).
Int	pump / alarm interaction under failure conditions.
End	Press the OK button to end commissioning menu.

Once in the Commissioning mode, Press the ∧ button:

- to scroll through the menus.
- to increase digits when in a menu.

Press the OK button to enter a menu choice (select a parameter or digit) and shift right, onto the next digit.

SHOPVALVES
GLOBAL VALVE SOLUTIONS | 阀门易购

SHOPVALVES
GLOBAL VALVE SOLUTIONS | 阀门易购

6.4 Main menu commissioning notes

AL1 – Configures Alarm Channel 1 as oFF, or a Hi or Lo alarm.

Press the ∧ button to select AL1.

Press the OK button to enter the sub-menu.

Press the ∧ button to toggle between menu choices, oFF, Hi or Lo alarm.

Press the OK button to select a menu choice.

AL2 – Configures Alarm Channel 2 as oFF, or a Hi or Lo alarm.

Press the ∧ button to select AL2.

Press the OK button to enter the sub-menu.

Press the ∧ button to toggle between menu choices, oFF, Hi or Lo alarm.

Press the OK button to select a menu choice.

Pu – Pump action – selects pumping oFF, In or pumping Out.
Pumping in fills a tank, e.g. a boiler feedtank. Pumping out removes water from a tank, e.g. condensate tank.

Press the ∧ button to select Pu.

Press the OK button to enter the sub-menu.

Press the ∧ button to toggle between menu choices, oFF, In or Out.

Press the OK button to select a menu choice.

dEL – Delay. To damp the input signals to avoid over-frequent switching in turbulent conditions.
A time delay of 2, 4, 8 or 16 seconds of time can be selected. These affect both alarms and the pump channel. Selecting '0' will switch off this function.
Note: All inputs have a fixed 2-second filter (dominant from wet to dry).

Press the ∧ button to select dEL.

Press the OK button to enter the sub-menu.

Press the ∧ button to toggle between menu choice, 0, 2, 4, 8 or 16 (seconds).

Press the OK button to select a menu choice.

Int – Interaction between the pump and alarm – On or Off.
A safety feature offering interaction between pump and alarm functions in the event of a failure of a probe or its wiring. It ensures that, for fill control, the pump will always operate if a low water alarm occurs.

Press the ∧ button to select Int.

Press the OK button to enter the sub-menu.

Press the ∧ button to toggle between menu choice, On or Off.

Press the OK button to select a menu choice.

Note: This product must be configured with a high alarm and a low alarm to fully utilise this function.

End– Press the OK button to end commissioning menu.

SHOPVALVES
GLOBAL VALVE SOLUTIONS | 阀门易购

SHOPVALVES
GLOBAL VALVE SOLUTIONS | 阀门易购

7. Communications

7.1 Infrared (IR)

All products in the range can communicate via an infrared link between adjacent controllers. It enables the parameters of this product (OEM) to be passed to a product fitted with RS485 (USER).

USER products are fitted with a graphics display and OEM products either have LED's, or three digit displays.

This unit is always an IR slave – no set-up or adjustment is needed.

For further information on Infrared and RS485 communication, see User Installation and Maintenance Instructions.

Important: Do not cover or obstruct the infrared beam between products.

See Section 11 - Appendix-data registers for further details.

8. Maintenance

Note: Read the 'Safety information' in Section 1 before doing any maintenance.

No special servicing, preventative maintenance or inspection of the product is required.

During installation and maintenace, the rear of the product **must** be protected from enviromental pollutants entering the product. Alternatively, the tasks can be performed in a dry clean enviroment.

Level controls

Boiler water level controls and level alarms do, however, require testing and inspection. General guidance is given in Health and Safety Executive Guidance Notes BG01 and INDG436.

For specific instructions for the Spirax Sarco system please see separate literature.

Cleaning instructions

Use a cloth dampened with tap / de-ionized water or isopropyl alcohol. Use of other cleaning materials could damage the product and invalidate the warranty.

SHOPVALVES
GLOBAL VALVE SOLUTIONS | 阀门易购

SHOPVALVES
GLOBAL VALVE SOLUTIONS | 阀门易购

9. Fault finding

WARNING:

Before fault finding read the Safety information in Section 1 and the General wiring notes in Section 5.1.

Please note that there are hazardous voltages present and only suitably qualified personnel should carry out fault finding.

The product must be isolated from the mains supply before touching any of the wiring terminals.

Safety may be compromised if the fault finding procedures are not carried out in line with this manual.

Relay fuses to be replaced by manufacturer or accredited service department.

During installation or maintenance, the rear of the product MUST be protected from environmental pollutants entering the product. Alternatively, the tasks can be performed in a dry clean environment.

9.1 Introduction

If for any reason a fault occurs on the product, the instructions in this section will allow the fault to be isolated and corrected. The most likely time for faults to occur is during installation and commissioning. The most common type of fault is wiring.

SHOPVALVES
GLOBAL VALVE SOLUTIONS | 阀门易购

SHOPVALVES
GLOBAL VALVE SOLUTIONS | 阀门易购

9.2 System faults

Symptom	Action
1 **Display not illuminating**	**1.** Switch off the mains supply to the product. **2.** Check all wiring is correct. **3.** Check external fuse(s) are intact. Replace if necessary. **4.** Check the mains voltage is within specification. **5.** Switch on mains supply. If symptoms are still present return the product for examination. Consider the likelihood that the product has been damaged from mains borne surges/spikes. Consider installing an additional ac power line protector between the product and the mains supply. The protector needs to be positioned close to the product to gain full protection.
2 **Display flashes on and off (1 second approx.)**	**1.** Switch off the mains supply to the product. **2.** Disconnect all signal wires. **3.** Switch the mains supply on: If symptoms are still present, return the product for examination. **4.** Replace each signal wire in turn until the fault occurs. **5.** Investigate and rectify any faults in the wiring, external sensors/transducers and modules associated with that connection. **Explanation** The internal power supply is unable to power up. If the voltages cannot be generated, the power supply switches off for approx. 1 second. The power supply then attempts to power up again. If the fault is still present, the cycle is repeated until the fault is removed. This is a safety feature and does not damage the product.
3 **Product powers up for a period of time (greater than 1 minute), then switches off**	**1.** Monitor the mains supply and ensure it is continuous and within the specification limits. **2.** Measure the ambient temperature and ensure it less than specified. **3.** Investigate symptom 2. **Explanation:** A re-settable thermal cut - out device will operate if one or more of the following occurs: **-** The power drawn exceeds the specification. **-** The input mains voltage is less than specified. **-** The ambient temperature is more than specified. **-** The internal power supply will switch off until the products temperature drops below 65 °C. This is a safety feature and does not damage the product.

SHOPVALVES
GLOBAL VALVE SOLUTIONS | 阀门易购

SHOPVALVES
GLOBAL VALVE SOLUTIONS | 阀门易购

9.3 Operational error messages

Any operational errors that occur will be displayed in the run mode, on the alarms and errors screen.

Symptom	Cause	Action
1 **Powerout**	There has been a loss of power to the product during operation.	**1.** Remove power from the product. **2.** Check that all the wiring is correct. **3.** Check that the power supply is secure, i.e. does not suffer from 'brown outs'. **4.** Reapply the power.
2 **Set-up menu time out**	The operator has entered the commissioning mode and has not pressed a button for 5 minutes or more.	**1.** Re-enter the commissioning mode if required.
3 **Alarm 1**	A high or low water alarm has occurred.	**1.** Check the boiler operation. **2.** Check the boiler set-up and operation of alarm and boiler water supply systems.
4 **Alarm 2**	A high or low water alarm has occurred.	**1.** Check the boiler operation. **2.** Check the boiler set-up and operation of alarm and boiler water supply systems.
5 **Invalid pump tip immersion**	The pump-hi (short) tip is wet, but the pump-low (long) tip is dry. This is an invalid state.	**1.** Check and correct probe wiring.

SHOPVALVES
GLOBAL VALVE SOLUTIONS | 阀门易购

SHOPVALVES
GLOBAL VALVE SOLUTIONS | 阀门易购

10. Technical information

10.1 For technical assistance

Contact your local Spirax Sarco representative. Details can be found on order/delivery documentation or on our web site: **www.spiraxsarco.com**

10.2 Returning faulty equipment

Please return all items to your local Spirax Sarco representative. Please ensure all items are suitably packed for transit (preferably in the original cartons).

Please provide the following information with any equipment being returned:

1. Your name, company name, address and telephone number, order number and invoice and return delivery address.
2. Description and serial number of equipment being returned.
3. Full description of the fault or repair required.
4. If the equipment is being returned under warranty, please indicate:
   - Date of purchase.
   - Original order number.

10.3 Power supply

Mains voltage range	110 V - 240 Vac at 50/60 Hz
Power consumption	7.5 W (maximum)

SHOPVALVES
GLOBAL VALVE SOLUTIONS | 阀门易购

SHOPVALVES
GLOBAL VALVE SOLUTIONS | 阀门易购

10.4 Environmental

General		Indoor use only
Maximum altitude		2 000 m (6 562 ft) above sea level
Ambient temperature limits		0 - 55 °C (32 - 131°F)
Maximum relative humidity		80% up to 31 °C (88°F) decreasing linearly to 50% at 40 °C (104°F)
Overvoltage category		III
		2 (as supplied)
Pollution degree		3 (when installed in an enclosure) - Minimum of IP54 or UL50 / NEMA Type 3, 3S, 4, 4X, 6, 6P or 13. See Section 4, Mechanical installation.
Enclosure rating (front panel only)		NEMA type 4 hose down only (UL approval), and IP65 (verified by TRAC Global)
Torque rating for panel screws		1 - 1.2 Nm
LVD (safety)		Electrical Safety EN 61010-1 UL61010-1, 3rd Edition, 2012-05 CAN/CSA-C22.2 No. 61010-1, 3rd Edition, 2012-05
EMC	Immunity / Emissions	Suitable for heavy industrial locations
Enclosure	Material	Polycarbonate
Front panel	Material	Silicone rubber, 60 shore.
Solder		Tin / lead (60 / 40%)

SHOPVALVES
GLOBAL VALVE SOLUTIONS | 阀门易购

SHOPVALVES
GLOBAL VALVE SOLUTIONS | 阀门易购

10.5 Cable / wire and connector data

Mains and signal connector

Termination	Rising clamp plug-in terminal blocks with screw connectors
Cable size	0.2 mm² (24 AWG) to 2.5 mm² (12 AWG).
Stripping length	5 - 6 mm

Caution: Use only the connectors supplied by Spirax Sarco Ltd. Safety and Approvals may be compromised otherwise.

Level probe cable / wire

Type	High temperature
Shield type	Screened
Number of cores	5
Gauge	1 – 1.5 mm² (18 - 16 AWG)
Maximum length	100 m (328 ft)

10.6 Input technical data

Level probe (conductivity)

Switching conductivity	1 µS / cm @ 25 °C, K = 0.22 (220 KΩ)
Drive	ac – pulsed

SHOPVALVES
GLOBAL VALVE SOLUTIONS | 阀门易购

SHOPVALVES
GLOBAL VALVE SOLUTIONS | 阀门易购

10.7 Output technical data

Relay(s)	
Contacts	2 x single pole changeover relays (SPCO)
Voltage ratings (maximum)	250 Vac
Resistive load	3 amp @ 250 Vac
Inductive load	1 amp @ 250 Vac
ac motor load	¼ HP (2.9 amp) @ 250 Vac
	$^{1}/_{10}$ HP (3 amp) @ 120 Vac
Pilot duty load	C300 (2.5 amp) - control circuit/coils
Electrical life (operations)	3 x 10^5 or greater depending on load
Mechanical life (operations)	30 x 10^6

Infrared	
Physical layer	IrDA
Baud	38 400
Range	10 cm
Working angle	15°
Eye safety information	Exempt from EN 60825-12: 2007 Safety of laser products - does not exceed the accessible emission limits (AEL) of Class 1

SHOPVALVES
GLOBAL VALVE SOLUTIONS | 阀门易购

SHOPVALVES
GLOBAL VALVE SOLUTIONS | 阀门易购

10.8 Programming parameters / default settings

AL1 - Alarm select	
Ranges	OFF, hI or LO
Default	hI
AL2 - Alarm select	
Ranges	OFF, hI or LO
Default	LO
PU - Pumping action	
Ranges	OFF, In or Out
Default	In
Input	
Ranges	0, 2, 4, 8, or 16
Default	0
Units	Seconds
Int - Alarm and pump Interaction	
Ranges	On or OFF
Default	OFF

SHOPVALVES
GLOBAL VALVE SOLUTIONS | 阀门易购

SHOPVALVES
GLOBAL VALVE SOLUTIONS | 阀门易购

11. Appendix - Data registers

Parameters and register data

Register	Parameters
0	5 - Identity
1	Pump + alarm status
2	Alarm 1 and alarm 2
3	Pump
4	-
5	-
6	-
7	-
8	-
9	-

The format of the register data is 16 bit integer, with the most significant byte transmitted first.

SHOPVALVES
GLOBAL VALVE SOLUTIONS | 阀门易购

SHOPVALVES
GLOBAL VALVE SOLUTIONS | 阀门易购

12. Menu map

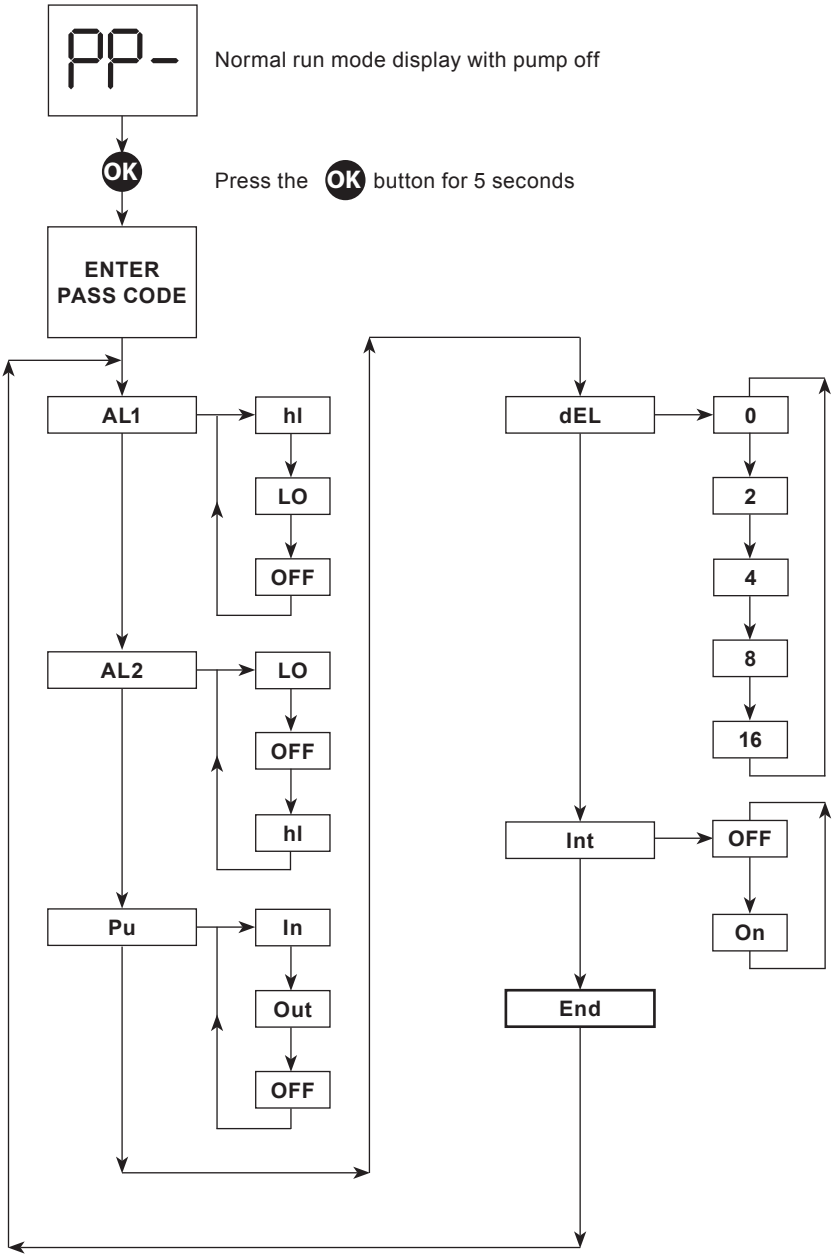

SHOPVALVES
GLOBAL VALVE SOLUTIONS | 阀门易购

SHOPVALVES
GLOBAL VALVE SOLUTIONS | 阀门易购

SHOPVALVES
GLOBAL VALVE SOLUTIONS | 阀门易购

SHOPVALVES
GLOBAL VALVE SOLUTIONS | 阀门易购

SHOPVALVES
GLOBAL VALVE SOLUTIONS | 阀门易购