SHOPVALVES
GLOBAL VALVE SOLUTIONS | 阀门易购

0290050/10

IM-P029-17
CMGT Issue 10

spirax sarco

LCV3, LCV4, LCV6 and LCV7 Lift Check Valves

Installation and Maintenance Instructions

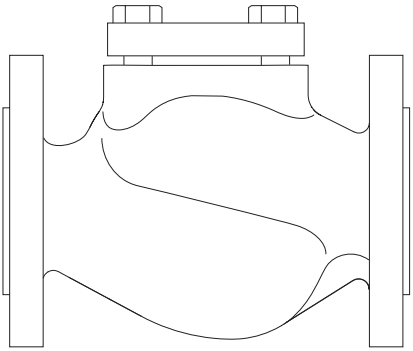

1. Safety information
2. General product information
3. Installation
4. Commissioning
5. Operation
6. Spare parts and Maintenance

© Copyright 2025

Printed in GB

SHOPVALVES
GLOBAL VALVE SOLUTIONS | 阀门易购

SHOPVALVES
GLOBAL VALVE SOLUTIONS | 阀门易购

SHOPVALVES
GLOBAL VALVE SOLUTIONS | 阀门易购

SHOPVALVES
GLOBAL VALVE SOLUTIONS | 阀门易购

1. Safety information

Safe operation of these products can only be guaranteed if they are properly installed, commissioned, used and maintained by qualified personnel (see Section 1.11) in compliance with the operating instructions. General installation and safety instructions for pipeline and plant construction, as well as the proper use of tools and safety equipment must also be complied with.

1.1 Intended use

Referring to the Installation and Maintenance Instructions, name-plate and Technical Information Sheet, check that the product is suitable for the intended use/application.

The products listed below comply with the requirements of the European Pressure Equipment Directive 2014/68/EU and carry the CE mark with the Notifying Body number when so required.

It should be noted that products rated as 'SEP' are required by the Directive not to carry the CE mark.

The products fall within the following Pressure Equipment Directive/safety regulation categories:

Unit	Sizes	Connections	Group 2 Gases	Group 2 Liquids
LCV3	DN15 to DN25	All	SEP	SEP
	DN32 to DN50	All	SEP	SEP
	DN65 to DN100	All	1	SEP
LCV4	DN15 to DN25	All	SEP	SEP
	DN32	All	SEP	SEP
	DN40 to DN50	ASME 150	SEP	SEP
		JIS/KS 10		
		PN25 and PN40	1	SEP
		JIS/KS 20		
		Others	1	SEP
	DN65 to DN100	All	1	SEP
LCV6	DN15 to DN25	All	SEP	SEP
	DN32	All	SEP	SEP
	DN40 to DN50	ASME 150	SEP	SEP
		JIS/KS 10		
		BSP	1	SEP
		PN16, PN25 and PN40		
		JIS/KS 20		
		Others	1	SEP
	DN65 to DN100	All	1	SEP

SHOPVALVES
GLOBAL VALVE SOLUTIONS | 阀门易购

SHOPVALVES
GLOBAL VALVE SOLUTIONS | 阀门易购

Unit	Sizes	Connections	Group 2 Gases	Group 2 Liquids
LCV7	DN15 to DN25	All	SEP	SEP
	DN32 to DN40	ASME 250	1	SEP
		NPT		
		Others	SEP	SEP
	DN50 to DN65	ASME 125	SEP	SEP
		JIS/KS 10		
		Others	1	SEP
	DN80	ASME 250	1	SEP
		Others	1	SEP
	DN100	ASME 125	1	SEP
		PN16		
		JIS/KS 10		
		Others	1	SEP

i) These products have been specifically designed for use on steam, compressed air, water and other industrial fluids that are in Group 2 of the above-mentioned Pressure Equipment Directive/ Safety Regulation.

ii) Check material suitability, pressure and temperature and their maximum and minimum values. If the maximum operating limits of the product are lower than those of the system in which it is being fitted, or if malfunction of the product could result in a dangerous overpressure or overtemperature occurrence, ensure a safety device is included in the system to prevent such over-limit situations.

iii) Determine the correct installation situation and direction of fluid flow.

iv) Spirax Sarco products are not intended to withstand external stresses that may be induced by any system to which they are fitted. It is the responsibility of the installer to consider these stresses and take adequate precautions to minimise them.

v) Remove protection covers from all connections and protective film from all name-plates, where appropriate, before installation on steam or other high temperature applications.

vi) Prior to use, the user shall ensure the fluid compatibility with the equipment material.

1.2 Access

Ensure safe access and if necessary a safe working platform (suitably guarded) before attempting to work on the product. Arrange suitable lifting gear if required.

1.3 Lighting

Ensure adequate lighting, particularly where detailed or intricate work is required.

SHOPVALVES
GLOBAL VALVE SOLUTIONS | 阀门易购

SHOPVALVES
GLOBAL VALVE SOLUTIONS | 阀门易购

1.4 Hazardous liquids or gases in the pipeline

Consider what is in the pipeline or what may have been in the pipeline at some previous time. Consider: flammable materials, substances hazardous to health, extremes of temperature.

1.5 Hazardous environment around the product

Consider: explosion risk areas, lack of oxygen (e.g. tanks, pits), dangerous gases, extremes of temperature, hot surfaces, fire hazard (e.g. during welding), excessive noise, moving machinery.

1.6 Isolation

Consider the effect on the complete system of the work proposed. Will any proposed action (e.g. closing isolation valves, electrical isolation) put any other part of the system or any personnel at risk?

Dangers might include isolation of vents or protective devices or the rendering ineffective of controls or alarms. Ensure isolation valves are turned on and off in a gradual way to avoid system shocks.

1.7 Pressure

Before attempting any maintenance consider what is or may have been in the pipeline. Ensure that any pressure is isolated and safely vented to atmospheric pressure before attempting to maintain the product, this is easily achieved by fitting Spirax Sarco depressurisation valves type DV (see separate literature for details) and consider double isolation (double block and bleed) and the locking or labelling of closed valves. Do not assume that the system is depressurised even when a pressure gauge indicates zero.

1.8 Temperature

Allow time for temperature to normalise after isolation to avoid the danger of burns and consider whether protective clothing (including safety glasses) is required.

1.9 Tools and consumables

Before starting work ensure that you have suitable tools and/or consumables available. Use only genuine Spirax Sarco replacement parts.

1.10 Protective clothing

Consider whether you and/or others in the vicinity require any protective clothing to protect against the hazards of, for example, chemicals, high/low temperature, radiation, noise, falling objects, and dangers to eyes and face.

1.11 Permits to work

All work must be carried out or be supervised by a suitably competent person.

Installation and operating personnel should be trained in the correct use of the product according to the Installation and Maintenance Instructions.

Where a formal 'permit to work' system is in force it must be complied with. Where there is no such system, it is recommended that a responsible person should know what work is going on and, where necessary, arrange to have an assistant whose primary responsibility is safety.

Post 'warning notices' if necessary.

SHOPVALVES
GLOBAL VALVE SOLUTIONS | 阀门易购

SHOPVALVES
GLOBAL VALVE SOLUTIONS | 阀门易购

1.12 Handling

Manual handling of large and/or heavy products may present a risk of injury. Lifting, pushing, pulling, carrying or supporting a load by bodily force can cause injury particularly to the back. You are advised to assess the risks taking into account the task, the individual, the load and the working environment and use the appropriate handling method depending on the circumstances of the work being done.

1.13 Residual hazards

In normal use the external surface of the product may be very hot. If used at the maximum permitted operating conditions the surface temperature of some products may reach temperatures of 400 °C (752 °F). Many products are not self-draining. Take due care when dismantling or removing the product from an installation (refer to 'Maintenance instructions').

1.14 Freezing

Provision must be made to protect products which are not self-draining against frost damage in environments where they may be exposed to temperatures below freezing point.

1.15 Disposal

Unless otherwise stated in the Installation and Maintenance Instructions, these products are recyclable and no ecological hazard is anticipated with their disposal providing due care is taken.

Please visit the Spirax Sarco product compliance web pages
https://www.spiraxsarco.com/product-compliance
for up to date information on any substances of concern that may be contained within this product. Where no additional information is provided on the Spirax Sarco product compliance web page, this product may be safely recycled and/or disposed providing due care is taken. Always check your local recycling and disposal regulations.

1.16 Returning products

Customers and stockists are reminded that under EC Health, Safety and Environment Law, when returning products to Spirax Sarco they must provide information on any hazards and the precautions to be taken due to contamination residues or mechanical damage which may present a health, safety or environmental risk. This information must be provided in writing including Health and Safety data sheets relating to any substances identified as hazardous or potentially hazardous.

1.17 Working safely with cast iron products on steam

Cast iron products are commonly found on steam and condensate systems. If installed correctly using good steam engineering practices, it is perfectly safe.
However, because of its mechanical properties, it is less forgiving compared to other materials such as SG iron or carbon steel. The following are the good engineering practices required to prevent waterhammer and ensure safe working conditions on a steam system.

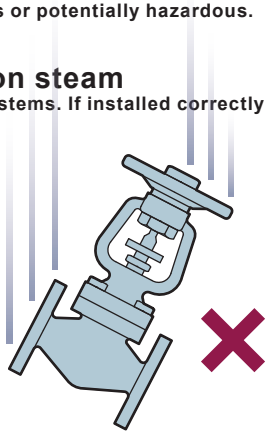

Safe Handling

Cast Iron is a brittle material. If the product is dropped during installation and there is any risk of damage the product should not be used unless it is fully inspected and pressure tested by the manufacturer.

SHOPVALVES
GLOBAL VALVE SOLUTIONS | 阀门易购

SHOPVALVES
GLOBAL VALVE SOLUTIONS | 阀门易购

Prevention of waterhammer

Steam trapping on steam mains:

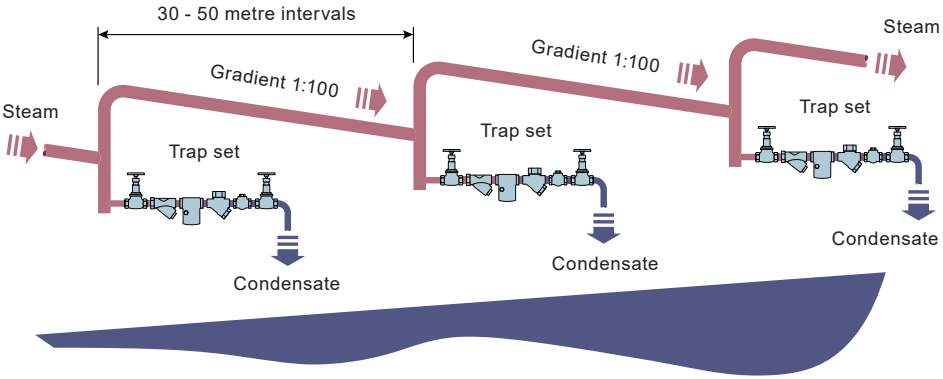

Steam Mains - Do's and Don'ts:

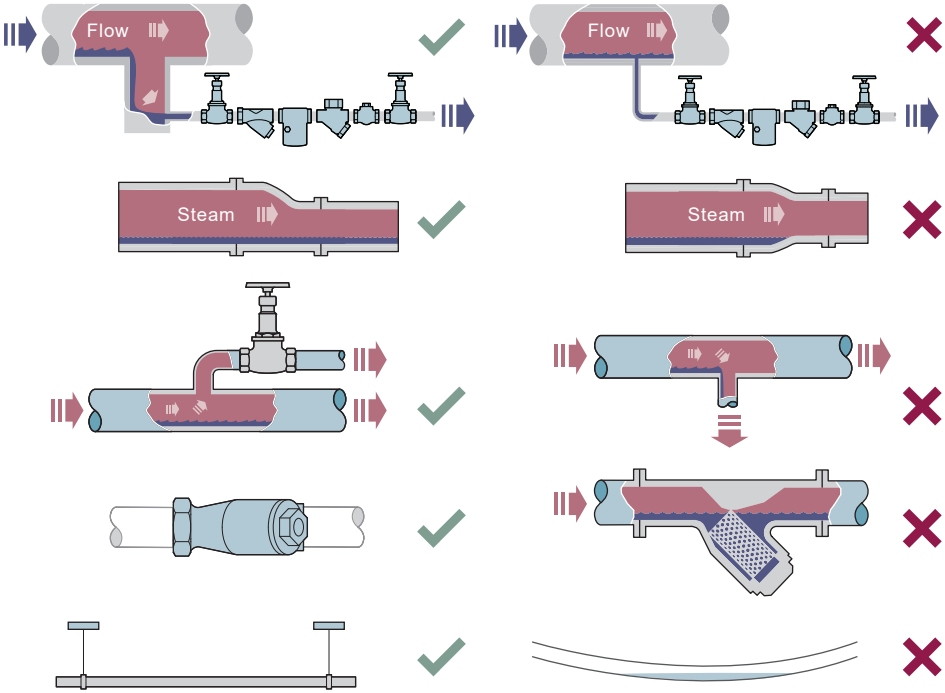

SHOPVALVES
GLOBAL VALVE SOLUTIONS | 阀门易购

SHOPVALVES
GLOBAL VALVE SOLUTIONS | 阀门易购

Prevention of tensile stressing

Pipe misalignment:

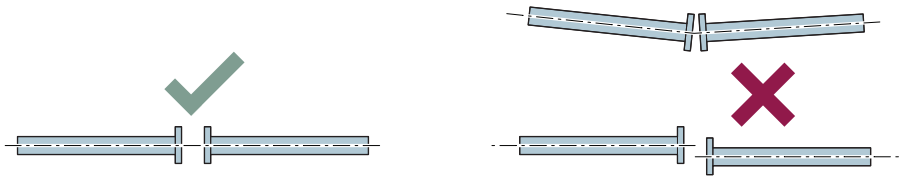

Installing products or re-assembling after maintenance:

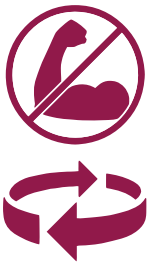

Do not over tighten.
Use correct torque figures.

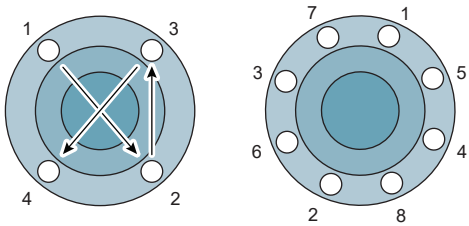

Flange bolts should be gradually tightened across diameters to ensure even load and alignment.

SHOPVALVES
GLOBAL VALVE SOLUTIONS | 阀门易购

SHOPVALVES
GLOBAL VALVE SOLUTIONS | 阀门易购

Thermal expansion:

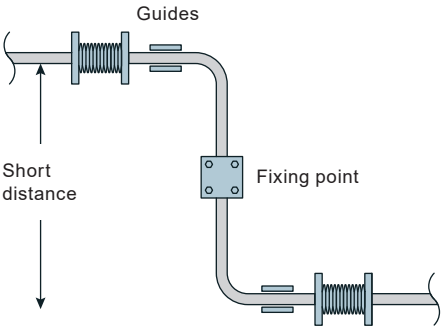

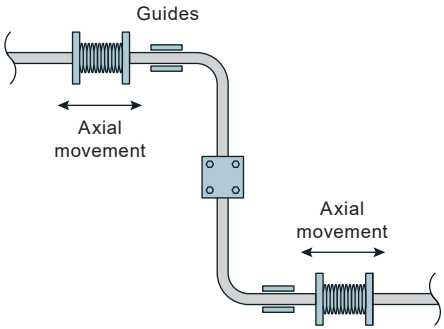

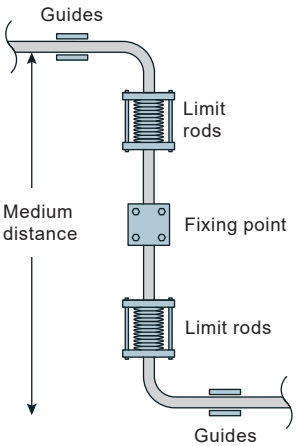

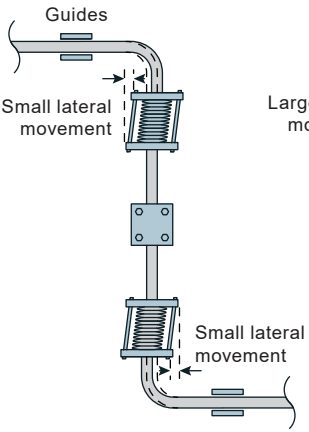

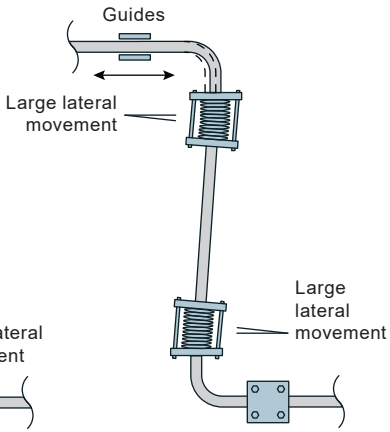

SHOPVALVES
GLOBAL VALVE SOLUTIONS | 阀门易购

SHOPVALVES
GLOBAL VALVE SOLUTIONS | 阀门易购

2. General product information

2.1 General description

The LCV3, LCV4, LCV6 and LCV7 lift check valves are designed in accordance with EN 12516 and ASME B16.34 to prevent reverse flow in the installations.

Available types:

LCV3 Cast iron bodied with stainless steel internals.
LCV4 Cast steel bodied with stainless steel internals.
LCV6 Stainless steel bodied with stainless steel internals.
LCV7 SG iron bodied with stainless steel internals.

Optional for the LCV4:

High temperature bolting (stainless steel A2-80).

Standards

These products fully comply with the requirements of the European Pressure Equipment Directive 2014/68/EU and carries the CE mark when so required.

Standard shut-off

This range of lift check valves conform to EN 12266-1: 2003 Rate F.

Certification

With the exception of the LCV3 these products are available with certification to EN 10204 3.1.
Note: All certification/inspection requirements must be stated at the time of order placement.

Note: For further information see the following Technical Information Sheet TI-P029-16.

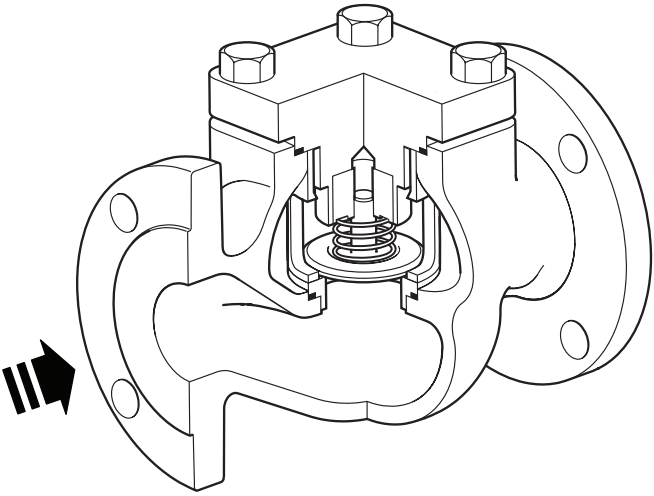

Fig. 1

SHOPVALVES
GLOBAL VALVE SOLUTIONS | 阀门易购

SHOPVALVES
GLOBAL VALVE SOLUTIONS | 阀门易购

2.2 Sizes and pipe connections

Unit	LCV3			LCV4		
Connections	PN16	ASME 125	BSP T Rp (ISO 7-1) NPT	PN40 JIS/KS 20	ASME 150 ASME 300	NPT SW
DN15 ½"	•		•	•	•	•
DN20 ¾"	•		•	•	•	•
DN25 1"	•	•	•	•	•	•
DN32 1¼"	•		•	•		•
DN40 1½"	•	•	•	•	•	•
DN50 2"	•	•	•	•	•	•
DN65 2½"	•	•		•	•	
DN80 3"	•	•		•	•	
DN100 4"	•	•		•	•	

Unit	LCV6			LCV7		
Connections	PN40 JIS/KS 20	ASME 150 ASME 300	BSP T Rp (ISO 7-1) NPT SW	PN16 PN25 JIS/KS 10	ASME 125 ASME 250	BSP T Rp (ISO 7-1) NPT
DN15 ½"	•	•	•	•		•
DN20 ¾"	•	•	•	•		•
DN25 1"	•	•	•	•	•	•
DN32 1¼"	•		•	•		•
DN40 1½"	•	•	•	•	•	•
DN50 2"	•	•	•	•	•	•
DN65 2½"	•	•		•	•	
DN80 3"	•	•		•	•	
DN100 4"	•	•		•	•	

SHOPVALVES
GLOBAL VALVE SOLUTIONS | 阀门易购

SHOPVALVES
GLOBAL VALVE SOLUTIONS | 阀门易购

2.3 Pressure/temperature limits - LCV3

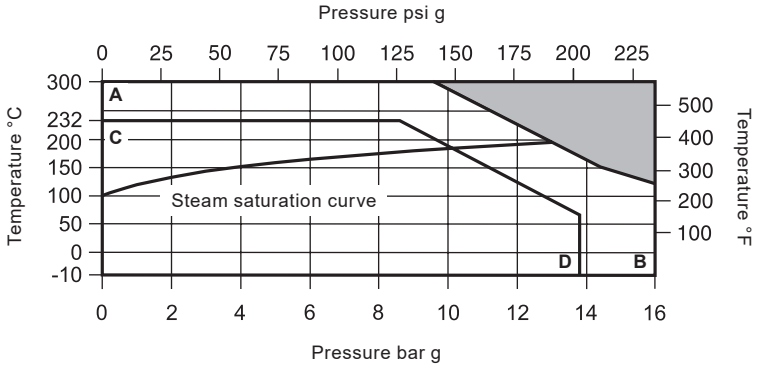

The product **must not** be used in this region.

A - B Screwed BSP and flanged EN 1092 PN16.

C - D Screwed NPT, socket weld and flanged ASME 125.

SHOPVALVES
GLOBAL VALVE SOLUTIONS | 阀门易购

SHOPVALVES
GLOBAL VALVE SOLUTIONS | 阀门易购

Screwed and Flanged EN 1092 PN16 (A - B)

Body design conditions			PN16
PMA	Maximum allowable pressure	16 bar g @ 120 °C	(232 psi g @ 248 °F)
TMA	Maximum allowable temperature	300 °C @ 9.6 bar g	(572 °F @ 139 psi g)
Minimum allowable temperature		-10 °C	(14 °F)
PMO	Maximum operating pressure for saturated steam service		13 bar g
TMO	Maximum operating temperature	300 °C @ 9.6 bar g	(572 °F @ 139 psi g)
Minimum operating temperature **Note:** For lower operating temperatures consult Spirax Sarco.		-10 °C	(14 °F)
Designed for a maximum cold hydraulic test pressure of:		24 bar g	(348 psi g)

Flanged ASME 125 (C - D)

Body design conditions			ASME 125
PMA	Maximum allowable pressure	13.8 bar g @ 65 °C	(200 psi g @ 149 °F)
TMA	Maximum allowable temperature	232 °C @ 8.6 bar g	(449 °F @ 125 psi g)
Minimum allowable temperature		-10 °C	(14 °F)
PMO	Maximum operating pressure for saturated steam service	10 bar g	(145 psi g)
TMO	Maximum operating temperature	232 °C @ 8.6 bar g	(449 °F @ 125 psi g)
Minimum operating temperature **Note:** For lower operating temperatures consult Spirax Sarco.		-10 °C	(14 °F)
Designed for a maximum cold hydraulic test pressure of		20.5 bar g	(297 psi g)

SHOPVALVES
GLOBAL VALVE SOLUTIONS | 阀门易购

SHOPVALVES
GLOBAL VALVE SOLUTIONS | 阀门易购

2.4 Pressure/temperature limits - LCV4

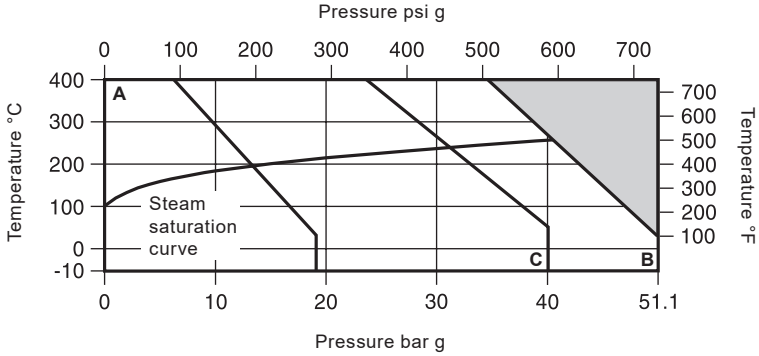

The product **must not** be used in this region.

A - B Screwed NPT, socket weld and flanged ASME 300.

A - C Flanged EN 1092 PN40.

SHOPVALVES
GLOBAL VALVE SOLUTIONS | 阀门易购

SHOPVALVES
GLOBAL VALVE SOLUTIONS | 阀门易购

Screwed NPT, Socket weld and Flanged ASME 300 (A - B)

Body design conditions			ASME 300
PMA	Maximum allowable pressure	51.1 bar g @ 38 °C	(741 psi g @ 100 °F)
TMA	Maximum allowable temperature	300 °C @ 39.8 bar g	(572 °F @ 577 psi g)
Maximum allowable temperature with high temperature bolting		400 °C @ 34.7 bar g	(752 °F @ 503 psi g)
Minimum allowable temperature		-10 °C	(14 °F)
PMO	Maximum operating pressure for saturated steam service	41.8 bar g	(606 psi g)
TMO	Maximum operating temperature	300 °C @ 39.8 bar g	(572 °F @ 577 psi g)
Maximum operating temperature with high temperature bolting		400 °C @ 34.7 bar g	(752 °F @ 503 psi g)
Minimum operating temperature Note: For lower operating temperatures consult Spirax Sarco.		-10 °C	(14 °F)
Designed for a maximum cold hydraulic test pressure of:		77 bar g	(1 117 psi g)

Flanged EN 1092 PN40 (A - C)

Body design conditions			PN40
PMA	Maximum allowable pressure	40 bar g @ 50 °C	(580 psi g @ 122 °F)
TMA	Maximum allowable temperature	300 °C @ 27.6 bar g	(572 °F @ 400 psi g)
Maximum allowable temperature with high temperature bolting		400 °C @ 23.8 bar g	(752 °F @ 345 psi g)
Minimum allowable temperature		-10 °C	(14 °F)
PMO	Maximum operating pressure for saturated steam service	31.1 bar g	(451 psi g)
TMO	Maximum operating temperature	300 °C @ 27.6 bar g	(572 °F @ 400 psi g)
Maximum operating temperature with high temperature bolting		400 °C @ 23.8 bar g	(752 °F @ 345 psi g)
Minimum operating temperature Note: For lower operating temperatures consult Spirax Sarco.		-10 °C	(14 °F)
Designed for a maximum cold hydraulic test pressure of:		60 bar g	(870 psi g)

LCV4 continued on next page

SHOPVALVES
GLOBAL VALVE SOLUTIONS | 阀门易购

SHOPVALVES
GLOBAL VALVE SOLUTIONS | 阀门易购

2.4 Pressure/temperature limits - LCV4 (continued)

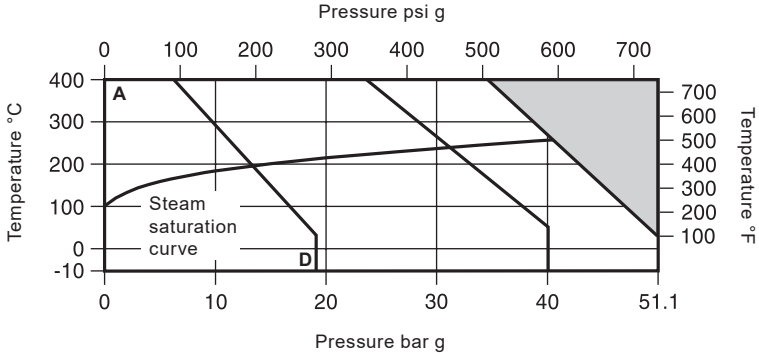

The product **must not** be used in this region.

A - D Flanged ASME 150.

Flanged ASME 150 (A - D)

Body design conditions			ASME 150
PMA	Maximum allowable pressure	19.3 bar g @ 38 °C	(280 psi g @ 100 °F)
TMA	Maximum allowable temperature	300 °C @ 10.2 bar g	(572 °F @ 148 psi g)
Maximum allowable temperature with high temperature bolting		400 °C @ 6.5 bar g	(752 °F @ 94 psi g)
Minimum allowable temperature		-10 °C	(14 °F)
PMO	Maximum operating pressure for saturated steam service	13.9 bar g	(201 psi g)
TMO	Maximum operating temperature	300 °C @ 10.2 bar g	(572 °F @ 148 psi g)
Maximum operating temperature with high temperature bolting		400 °C @ 6.5 bar g	(752 °F @ 94 psi g)
Minimum operating temperature Note: For lower operating temperatures consult Spirax Sarco.		-10 °C	(14 °F)
Designed for a maximum cold hydraulic test pressure of:		30 bar g	(435 psi g)

SHOPVALVES
GLOBAL VALVE SOLUTIONS | 阀门易购

SHOPVALVES
GLOBAL VALVE SOLUTIONS | 阀门易购

Flanged JIS/KS 20

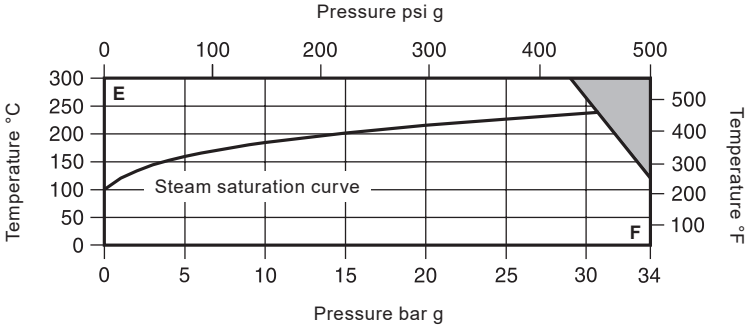

The product **must not** be used in this region.

E - F Flanged JIS/KS 20.

Body design conditions			JIS/KS 20
PMA	Maximum allowable pressure	34 bar g @ 120 °C	(493 psi g @ 248 °F)
TMA	Maximum allowable temperature	300 °C @ 32 bar g	(572 °F @ 464 psi g)
Minimum allowable temperature		0 °C	(32 °F)
PMO	Maximum operating pressure for saturated steam service	30 bar g	(435 psi g)
TMO	Maximum operating temperature	300 °C @ 32 bar g	(572 °F @ 464 psi g)
Minimum operating temperature **Note:** For lower operating temperatures consult Spirax Sarco.		0 °C	(32 °F)
Designed for a maximum cold hydraulic test pressure of:		51 bar g	(739 psi g)

SHOPVALVES
GLOBAL VALVE SOLUTIONS | 阀门易购

SHOPVALVES
GLOBAL VALVE SOLUTIONS | 阀门易购

2.5 Pressure/temperature limits - LCV6

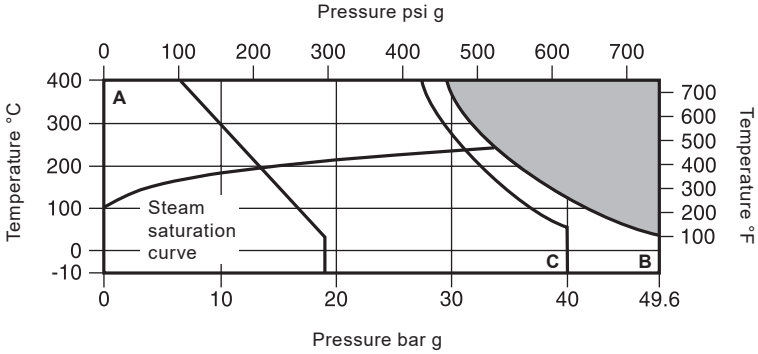

The product **must not** be used in this region.

A - B Screwed NPT, socket weld and flanged ASME 300.

A - C Flanged EN 1092 PN40.

SHOPVALVES
GLOBAL VALVE SOLUTIONS | 阀门易购

SHOPVALVES
GLOBAL VALVE SOLUTIONS | 阀门易购

Screwed NPT, Socket weld and Flanged ASME 300 (A - B)

Body design conditions			ASME 300
PMA	Maximum allowable pressure	49.6 bar g @ 38 °C	(719 psi g @ 100 °F)
TMA	Maximum allowable temperature	400 °C @ 29.4 bar g	(752 °F @ 426 psi g)
Minimum allowable temperature		-10 °C	(14 °F)
PMO	Maximum operating pressure for saturated steam service	34 bar g	(493 psi g)
TMO	Maximum operating temperature	400 °C @ 29.4 bar g	(752 °F @ 426 psi g)
Minimum operating temperature Note: For lower operating temperatures consult Spirax Sarco.		-10 °C	(14 °F)
Designed for a maximum cold hydraulic test pressure of:		76 bar g	(1 102 psi g)

Screwed BSP and Flanged EN 1092 PN40 (A - C)

Body design conditions			PN40
PMA	Maximum allowable pressure	40 bar g @ 50 °C	(580 psi g @ 122 °F)
TMA	Maximum allowable temperature	400 °C @ 27.4 bar g	(752 °F @ 397 psi g)
Minimum allowable temperature		-10 °C	(14 °F)
PMO	Maximum operating pressure for saturated steam service	32.3 bar g	(468 psi g)
TMO	Maximum operating temperature	400 °C @ 27.4 bar g	(752 °F @ 397 psi g)
Minimum operating temperature Note: For lower operating temperatures consult Spirax Sarco.		-10 °C	(14 °F)
Designed for a maximum cold hydraulic test pressure of:		60 bar g	(870 psi g)

LCV6 continued on next page

SHOPVALVES
GLOBAL VALVE SOLUTIONS | 阀门易购

SHOPVALVES
GLOBAL VALVE SOLUTIONS | 阀门易购

2.5 Pressure/temperature limits - LCV6 (continued)

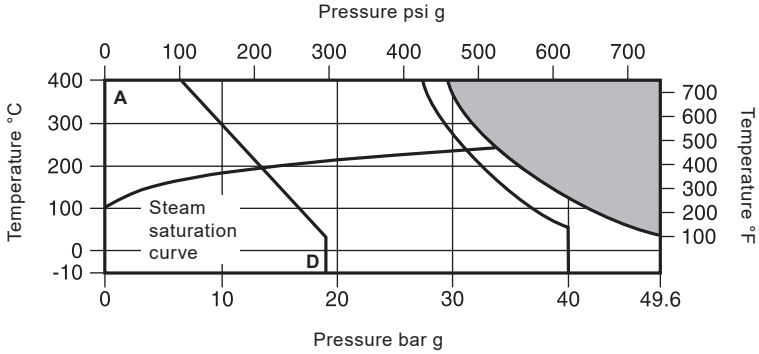

The product **must not** be used in this region.

A - D Flanged ASME 150.

Flanged ASME 150 (A - D)

Body design conditions			ASME 150
PMA	Maximum allowable pressure	19 bar g @ 38 °C	(275 psi g @ 100 °F)
TMA	Maximum allowable temperature	400 °C @ 6.5 bar g	(752 °F @ 94 psi g)
Minimum allowable temperature		-10 °C	(14 °F)
PMO	Maximum operating pressure for saturated steam service	13.8 bar g	(200 psi g)
TMO	Maximum operating temperature	400 °C @ 6.5 bar g	(752 °F @ 94 psi g)
Minimum operating temperature Note: For lower operating temperatures consult Spirax Sarco.		-10 °C	(14 °F)
Designed for a maximum cold hydraulic test pressure of:		30 bar g	(435 psi g)

SHOPVALVES
GLOBAL VALVE SOLUTIONS | 阀门易购

SHOPVALVES
GLOBAL VALVE SOLUTIONS | 阀门易购

Flanged JIS/KS 20

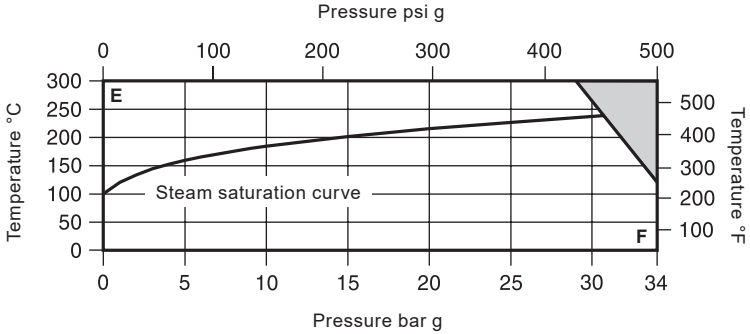

The product **must not** be used in this region.

E - F Flanged JIS/KS 20.

Body design conditions			JIS/KS 20
PMA	Maximum allowable pressure	34 bar g @ 120 °C	(493 psi g @ 248 °F)
TMA	Maximum allowable temperature	300 °C @ 32 bar g	(572 °F @ 464 psi g)
Minimum allowable temperature		0 °C	(32 °F)
PMO	Maximum operating pressure for saturated steam service	23.5 bar g	(431 psi g)
TMO	Maximum operating temperature	300 °C @ 32 bar g	(572 °F @ 464 psi g)
Minimum operating temperature **Note:** For lower operating temperatures consult Spirax Sarco.		0 °C	(32 °F)
Designed for a maximum cold hydraulic test pressure of:		51 bar g	(739 psi g)

SHOPVALVES
GLOBAL VALVE SOLUTIONS | 阀门易购

SHOPVALVES
GLOBAL VALVE SOLUTIONS | 阀门易购

2.6 Pressure/temperature limits - LCV7

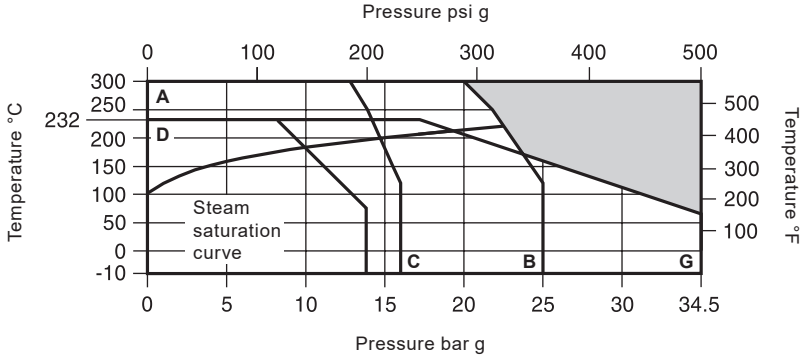

The product **must not** be used in this region.

A - B Screwed BSP and flanged EN 1092 PN25.

A - C Screwed NPT and flanged EN 1092 PN16.

D - G Flanged ASME 250.

SHOPVALVES
GLOBAL VALVE SOLUTIONS | 阀门易购

SHOPVALVES
GLOBAL VALVE SOLUTIONS | 阀门易购

Screwed BSP and Flanged EN 1092 PN25 (A - B)

Body design conditions			PN25
PMA	Maximum allowable pressure	25 bar g @ 120 °C	(462 psi g @ 248 °F)
TMA	Maximum allowable temperature	300 °C @ 20 bar g	(572 °F @ 290 psi g)
Minimum allowable temperature		-10 °C	(14 °F)
PMO	Maximum operating pressure for saturated steam service	22.5 bar g	(326 psi g)
TMO	Maximum operating temperature	300 °C @ 20 bar g	(572 °F @ 290 psi g)
Minimum operating temperature Note: For lower operating temperatures consult Spirax Sarco.		-10 °C	(14 °F)
Designed for a maximum cold hydraulic test pressure of:		38 bar g	(551 psi g)

Flanged EN 1092 PN16 (A - C)

Body design conditions		PN16	
PMA	Maximum allowable pressure	16 bar g @ 120 °C	(232 psi g @ 248 °F)
TMA	Maximum allowable temperature	300 °C @ 12.8 bar g	(572 °F @ 185 psi g)
Minimum allowable temperature		-10 °C	(14 °F)
PMO	Maximum operating pressure for saturated steam service	14.7 bar g	(213 psi g)
TMO	Maximum operating temperature	300 °C @ 12.8 bar g	(572 °F @ 185 psi g)
Minimum operating temperature Note: For lower operating temperatures consult Spirax Sarco.		-10 °C	(14 °F)
Designed for a maximum cold hydraulic test pressure of:		24 bar g	(348 psi g)

Screwed NPT and Flanged ASME 250 (D - G)

Body design conditions			ASME 250
PMA	Maximum allowable pressure	34.5 bar g @ 65 °C	(500 psi g @ 149 °F)
TMA	Maximum allowable temperature	232 °C @ 17.2 bar g	(449 °F @ 249 psi g)
Minimum allowable temperature		-10 °C	(14 °F)
PMO	Maximum operating pressure for saturated steam service	19.4 bar g	(281 psi g)
TMO	Maximum operating temperature	232 °C @ 17.2 bar g	(449 °F @ 249 psi g)
Minimum operating temperature Note: For lower operating temperatures consult Spirax Sarco.		-10 °C	(14 °F)
Designed for a maximum cold hydraulic test pressure of:		52 bar g	(754 psi g)

LCV7 continued on next page

SHOPVALVES
GLOBAL VALVE SOLUTIONS | 阀门易购

SHOPVALVES
GLOBAL VALVE SOLUTIONS | 阀门易购

2.6 Pressure/temperature limits - LCV7 (continued)

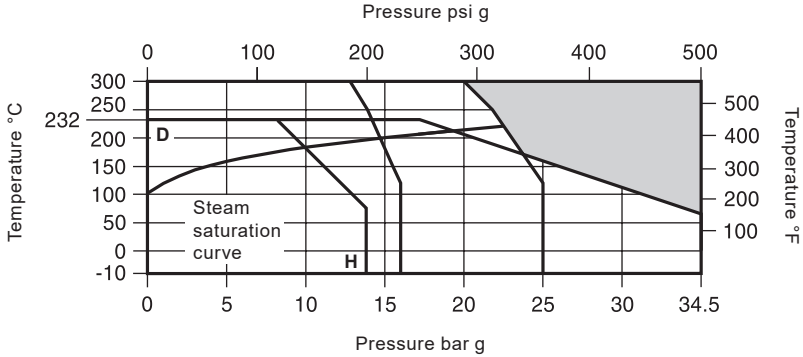

The product **must not** be used in this region.

D - H Flanged ASME 125.

Flanged ASME 125 (D - H)

Body design conditions			ASME 125
PMA	Maximum allowable pressure	13.8 bar g @ 65 °C	(200 psi g @ 149 °F)
TMA	Maximum allowable temperature	232 °C @ 8.6 bar g	(449 °F @ 125 psi g)
Minimum allowable temperature		-10 °C	(14 °F)
PMO	Maximum operating pressure for saturated steam service	10 bar g	(145 psi g)
TMO	Maximum operating temperature	232 °C @ 8.6 bar g	(449 °F @ 125 psi g)
Minimum operating temperature Note: For lower operating temperatures consult Spirax Sarco.		-10 °C	(14 °F)
Designed for a maximum cold hydraulic test pressure of:		20.5 bar g	(297 psi g)

SHOPVALVES
GLOBAL VALVE SOLUTIONS | 阀门易购

SHOPVALVES
GLOBAL VALVE SOLUTIONS | 阀门易购

Flanged JIS/KS 10

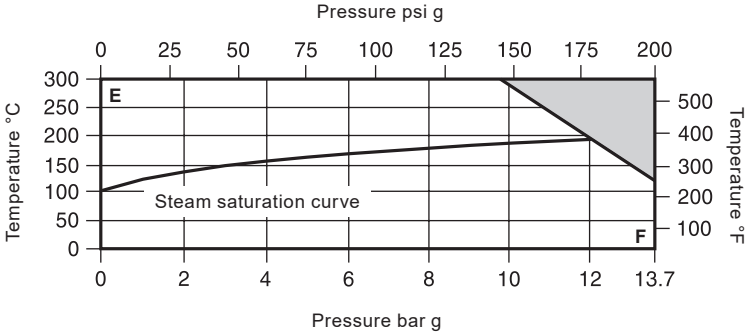

The product **must not** be used in this region.

E - F Flanged JIS/KS 10.

Body design conditions			JIS/KS 10
PMA	Maximum allowable pressure	13.7 bar g @ 120 °C	(199 psi g @ 248 °F)
TMA	Maximum allowable temperature	300 °C @ 9.8 bar g	(572 °F @ 142 psi g)
Minimum allowable temperature		0 °C	(32 °F)
PMO	Maximum operating pressure for saturated steam service	12.3 bar g	(178 psi g)
TMO	Maximum operating temperature	300 °C @ 9.8 bar g	(572 °F @ 142 psi g)
Minimum operating temperature **Note:** For lower operating temperatures consult Spirax Sarco.		0 °C	(32 °F)
Designed for a maximum cold hydraulic test pressure of:		20 bar g	(290 psi g)

SHOPVALVES
GLOBAL VALVE SOLUTIONS | 阀门易购

SHOPVALVES
GLOBAL VALVE SOLUTIONS | 阀门易购

2.7 Dimensions (approximate) in mm

Please note: Flanged ASME versions are (approximate) in inches

Dimension A

Connection	Screwed BSP	Flanged PN40 PN16 PN25 JIS 10/KS 10 JIS 20/KS 20	Screwed NPT Socket weld	Flanged ASME 125 LCV3	Flanged ASME 125 LCV7	Flanged ASME 150	Flanged ASME 250 ASME 300
DN15 ½"	130	130	6½"	7¼"		7¼"	7½"
DN20 ¾"	155	150	6½"	7¼"		7¼"	7½"
DN25 1"	160	160	7¾"	7¼"	7¼"	7¼"	7¾"
DN32 1¼"	185	180	8½"				
DN40 1½"	205	200	9¼"	8¾"	8¾"	8¾"	9¼"
DN50 2"	230	230	10½"	10"	10"	10"	10½"
DN65 2½"		290		10½"	10½"	10⅞"	11½"
DN80 3"		310		11¾"	11¾"	11¾"	12½"
DN100 4"		350		13¾"	13¾"	13⅞"	14½"

Fig. 2

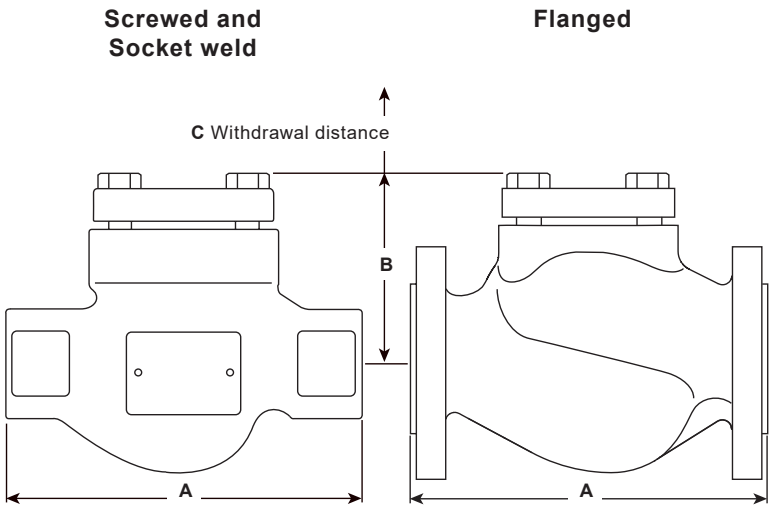

SHOPVALVES
GLOBAL VALVE SOLUTIONS | 阀门易购

SHOPVALVES
GLOBAL VALVE SOLUTIONS | 阀门易购

Dimension B

Connection	Screwed BSP	Flanged PN40 PN16 PN25 JIS 10/KS 10 JIS 20/KS 20	Screwed NPT Socket weld	Flanged ASME 125 LCV3	Flanged ASME 125 LCV7	Flanged ASME 150	Flanged ASME 250 ASME 300
DN15 ½"	88	88	4"	4"	4"	4"	4"
DN20 ¾"	88	88	4"	4"	4"	4"	4"
DN25 1"	88	88	4"	4"	4"	4"	4"
DN32 1¼"	117	117	5 3/16"				
DN40 1½"	117	117	5 3/16"	5 3/16"	5 3/16"	5 3/16"	5 3/16"
DN50 2"	117	117	5 3/16"	5 3/16"	5 3/16"	5 3/16"	5 3/16"
DN65 2½"		166		7 7/8"	7 7/8"	7 7/8"	7 7/8"
DN80 3"		166		7 7/8"	7 7/8"	7 7/8"	7 7/8"
DN100 4"		180		8½"	8½"	8½"	8½"

Dimension C

Connection	All sizes
DN15 ½"	143
DN20 ¾"	143
DN25 1"	143
DN32 1¼"	182
DN40 1½"	182
DN50 2"	182
DN65 2½"	260
DN80 3"	260
DN100 4"	300

SHOPVALVES
GLOBAL VALVE SOLUTIONS | 阀门易购

SHOPVALVES
GLOBAL VALVE SOLUTIONS | 阀门易购

2.8 Product name-plate

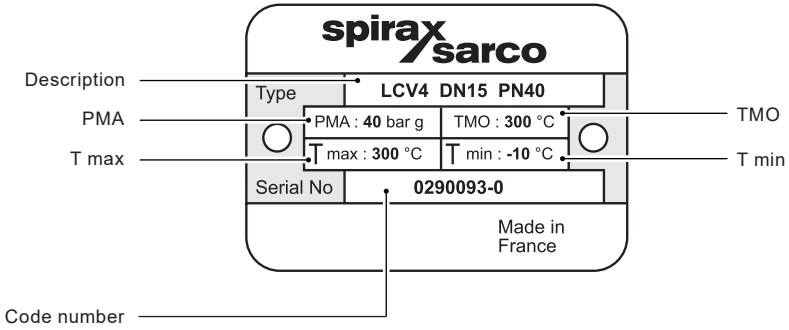

Fig. 3

2.9 Weights (approximate) in kg

Unit		LCV3		LCV4		LCV6		LCV7	
		Flanged	Screwed	Flanged	Screwed Socket weld	Flanged	Screwed Socket weld	Flanged	Screwed
DN15	**½"**	4.30	3.10	5.05	3.65	5.19	3.79	4.64	3.24
DN20	**¾"**	5.50	4.10	6.43	5.33	6.60	5.50	5.89	4.29
DN25	**1"**	5.82	4.10	6.58	4.18	6.77	4.37	6.04	3.74
DN32	**1¼"**	10.23	7.20	12.89	9.59	13.37	10.07	11.99	8.69
DN40	**1½"**	11.43	8.00	14.35	9.55	14.77	9.97	13.18	9.28
DN50	**2"**	14.96	10.50	16.86	12.06	17.51	12.71	15.65	10.65
DN65	**2½"**	27.04		32.25		33.13		29.53	
DN80	**3"**	29.47		36.02		37.00		33.00	
DN100	**4"**	48.93		52.06		53.47		48.82	

SHOPVALVES
GLOBAL VALVE SOLUTIONS | 阀门易购

SHOPVALVES
GLOBAL VALVE SOLUTIONS | 阀门易购

3. Installation

Note: Before actioning any installation observe the 'Safety information' in Section 1.

Referring to the Installation and Maintenance Instructions, name-plate and Technical Information Sheet, check that the product is suitable for the intended installation:

3.1 Check materials, pressure and temperature and their maximum values. If the maximum operating limit of the product is lower than that of the system in which it is being fitted, ensure that a safety device is included in the system to prevent overpressurisation.

3.2 Determine the correct installation situation and the direction of fluid flow.

3.3 Remove protective covers from all connections and the protective film from all name-plates, where appropriate, before installation on steam or other high temperature applications.

3.4 The LCV is designed for installation in horizontal and vertical pipework (see Figure 4).

3.5 Always fit a non-return (check) valve downstream of any steam traps which discharge into condensate return lines where backpressure is experienced. This is most commonly caused by a rising condensate line. The check valve will prevent the steam space flooding when the inlet pressure is reduced or the steam is shut off.

3.6 When the LCV is installed after a blast action steam trap (thermodynamic and inverted bucket), it should be positioned at least 1 m (3 ft) downstream of the outlet.

3.7 Isolation valves must be installed to allow for safe maintenance and check valve replacement.

3.8 Open isolation valves slowly until normal operating conditions are achieved.

3.9 Check for leaks and correct operation.

3.10 Ensure adequate space is left to remove the cover from the body for maintenance - See Section 2.4, minimum withdrawal distance 'C'.

3.11 Welding into the pipeline - LCV4 and LCV6 socket weld connections. For specific weld procedures consult the relevant National and International welding standards.

Note: If a trap is to discharge to atmosphere ensure it is to a safe place as the discharging fluid may be at a temperature of 100 °C (212 °F).

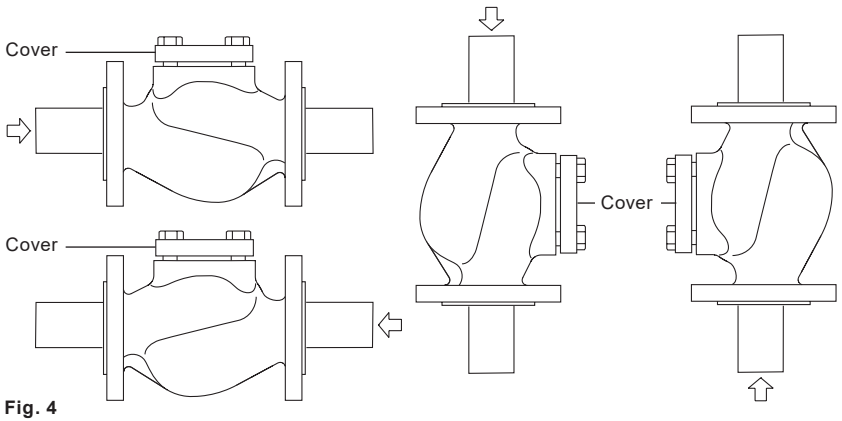

Fig. 4

SHOPVALVES
GLOBAL VALVE SOLUTIONS | 阀门易购

SHOPVALVES
GLOBAL VALVE SOLUTIONS | 阀门易购

4. Commissioning

After installation or maintenance ensure that the system is fully functional. Carry out tests on any alarms or protective devices.

5. Operation

LCV check valves are opened by the pressure of the fluid and closed by the spring as soon as the flow ceases and before the reverse flow occurs.

Open

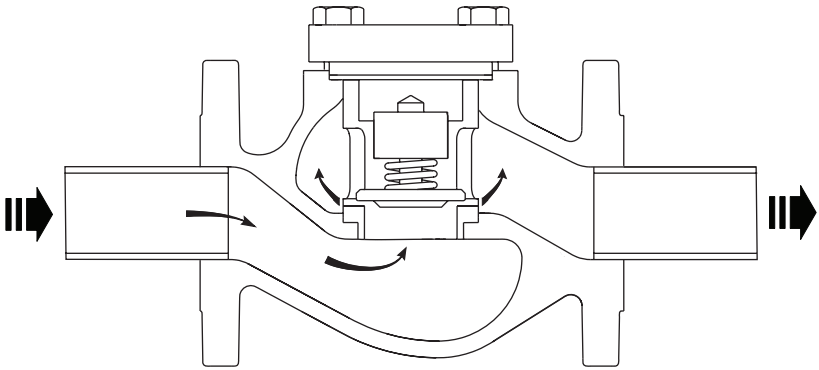

Closed

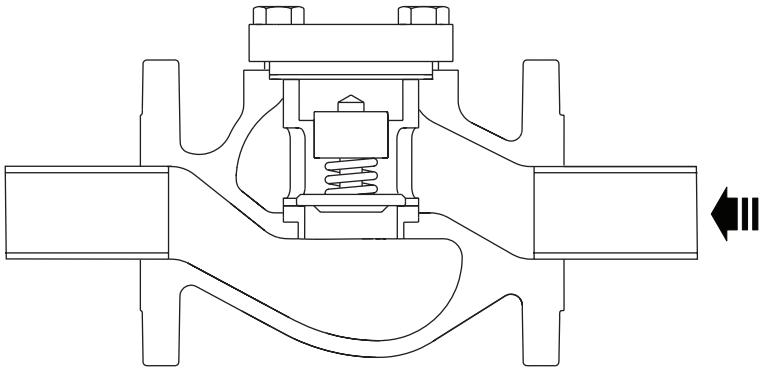

Fig. 5

SHOPVALVES
GLOBAL VALVE SOLUTIONS | 阀门易购

SHOPVALVES
GLOBAL VALVE SOLUTIONS | 阀门易购

6. Spare parts and Maintenance

6.1 Spare parts

The spare parts available are shown in solid outline. Parts drawn in broken line are not supplied as spares.

Available spares

LCV Gaskets kit (Cover gasket and seat gasket)	**Spare 1**
LCV Internals kit (Cover gasket, seat gasket, spring, disc and seat)	**Spare 2**

How to order spares

Always order spares by using the description given in the column headed 'Available spares' and state the size and type of trap. Always order spares by using the description of the LCV and Spare 1 or Spare 2.

Example: 1 off LCV Internals kit – Spare 2, for a Spirax Sarco DN15 LCV4 lift check valve having flanged EN 1092 PN40 connections.

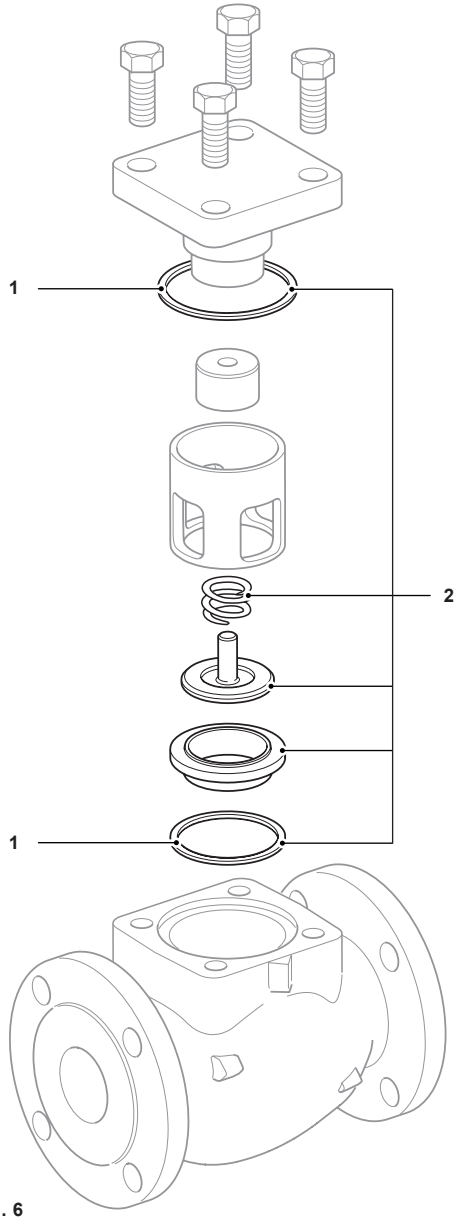

Fig. 6

SHOPVALVES
GLOBAL VALVE SOLUTIONS | 阀门易购

SHOPVALVES
GLOBAL VALVE SOLUTIONS | 阀门易购

6.2 Maintenance

Note: Before actioning any maintenance programme observe the 'Safety information' in Section 1.

6.2.1 How to renew the cover gasket (3a) and seat gasket (3b):

- Isolate the LCV and allow the pressure and temperature to reduce to ambient conditions.
- After isolation, unscrew the bolts (**8**) and remove the cover (**1**), old gasket (**3a**) and cage (**9**).
- Remove the spring (**7**) and the disc (**6**).
- Remove the seat (**4**) and the seat gasket (**3b**).
- Carefully clean the recess.
- Refit new seat gasket (**3b**) and cover gasket (**3a**).
- Replace the internals - seat (**4**) and cage (**9**) after refitting the disc (**6**) and spring (**7**).
- Replace the cover (**1**) and the bolts (**8**) (for the LCV6 version you must lubricate the screws when refitting the bolt) and tighten to the recommended torque (see Table 1).
- After maintenance has been completed, isolation valves should be opened slowly to allow pressure and temperature to build up in a controlled manner.
- Check for leaks.

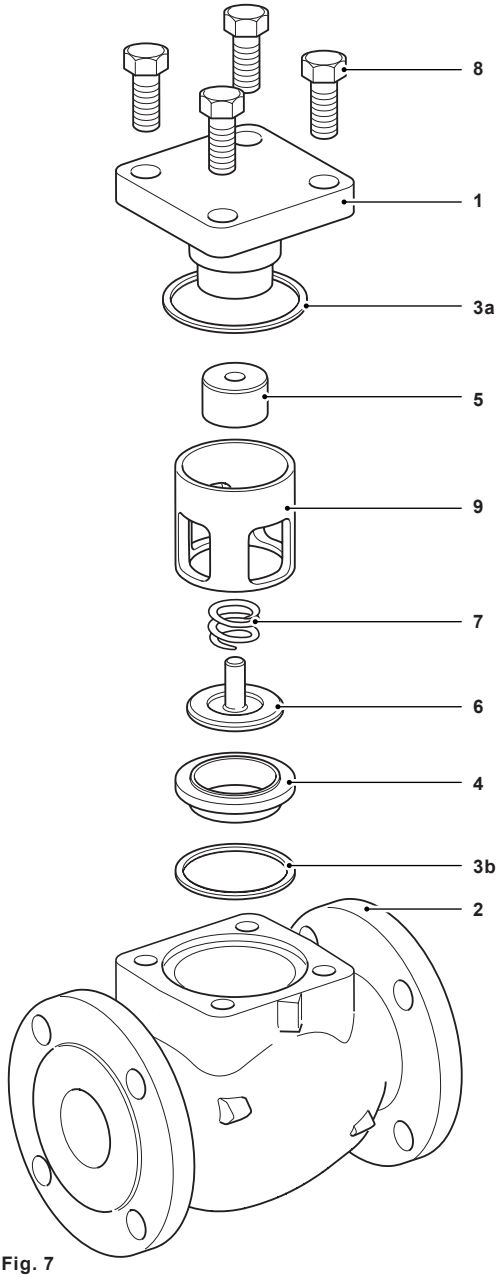

Fig. 7

SHOPVALVES
GLOBAL VALVE SOLUTIONS | 阀门易购

SHOPVALVES
GLOBAL VALVE SOLUTIONS | 阀门易购

6.2.2
How to renew the internal parts - Disc (6), Spring (7) and Seat (4):

- Isolate the LCV and allow the pressure and temperature to reduce to ambient conditions.
- After isolation, unscrew the bolts (**8**) and remove the cover (**1**), old gasket (**3a**) and cage (**9**).
- Remove the spring (**7**) and the disc (**6**).
- Remove the seat (**4**) and the seat gasket (**3b**).
- Carefully clean the recess.
- Refit new seat gasket (**3b**) and cover gasket (**3a**).
- Refit new internals - Seat (**4**), Disc (**6**) and Spring (**7**).
- Replace the cage (**9**).
- Replace the cover (**1**) and the bolts (**8**) (for the LCV6 version you must lubricate the screws when refitting the bolt) and tighten to the recommended torque (see Table 1).
- After maintenance has been completed, isolation valves should be opened slowly to allow pressure and temperature to build up in a controlled manner.
- Check for leaks.

Table 1 Recommended tightening torque

Item	Size	EN		ASME	EN		ASME	Torque N m (lbf ft)
8	**DN15 to DN25 (½" to 1")**	**LCV3**	17 A/F	⅞" A/F	**LCV3**	M10	½" - 13 UNC	40 - 50 (30 - 37)
		Others	19 A/F		**Others**	M12		
	DN32 to DN50 (1¼" to 2")	**LCV3**	19 A/F	1 1/16" A/F	**LCV3**	M12	⅝" - 11 UNC	80 - 90 (59 - 66)
		Others	24 A/F		**Others**	M16		
	DN65 to DN80 (2½" to 3")		24 A/F	1¼" A/F		M16	¾" - 9 UNC	90 - 100 (66 - 74)
	DN100 (4")		24 A/F	1 1/16" A/F		M16	⅝" - 11 UNC	70 - 80 (52 - 59)

SHOPVALVES
GLOBAL VALVE SOLUTIONS | 阀门易购

SHOPVALVES
GLOBAL VALVE SOLUTIONS | 阀门易购

SHOPVALVES
GLOBAL VALVE SOLUTIONS | 阀门易购

SHOPVALVES
GLOBAL VALVE SOLUTIONS | 阀门易购

SHOPVALVES
GLOBAL VALVE SOLUTIONS | 阀门易购

SHOPVALVES
GLOBAL VALVE SOLUTIONS | 阀门易购

SHOPVALVES
GLOBAL VALVE SOLUTIONS | 阀门易购