Local regulations may restrict the use of this product to below the conditions quoted.
In the interests of development and improvement of the product, we reserve the right to change the specification without notice. © Copyright 2025

SHOPVALVES GLOBAL VALVE SOLUTIONS | 阀门易购

LCV3, LCV4, LCV6 and LCV7 Lift Check Valves

Description

The LCV3, LCV4, LCV6 and LCV7 lift check valves are designed in accordance with EN 12516 and ASME B16.34 to prevent reverse flow in the installations. The design of these valves allows them to be easily serviced without removing the valve from the pipeline - See Spare parts, page 8.

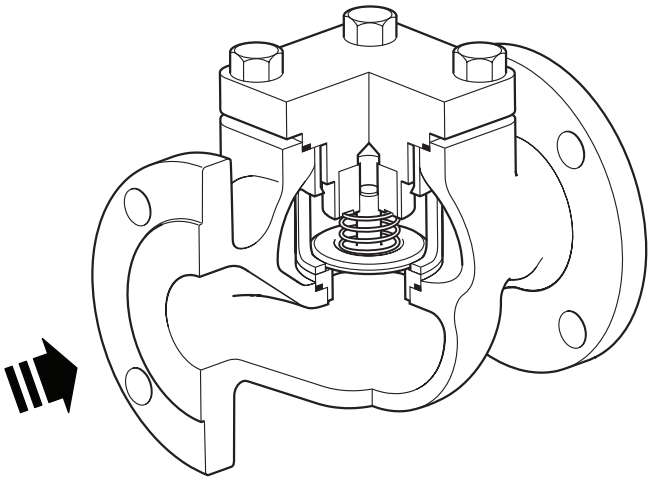

Available types:

LCV3 Cast iron bodied with stainless steel internals.
LCV4 Cast steel bodied with stainless steel internals.
LCV6 Stainless steel bodied with stainless steel internals.
LCV7 SG iron bodied with stainless steel internals.

Optional for the LCV4:

High temperature bolting (stainless steel A2-80).

Standards

These products fully comply with the requirements of the EU Pressure Equipment Directive/UK Pressure Equipment (Safety) Regulations and carries the CE mark when so required.

Standard shut-off

This range of lift check valves conform to EN 12266-1: 2003 Rate F.

Certification

With the exception of the LCV3 these products are available with certification to EN 10204 3.1.
Note: All certification/inspection requirements must be stated at the time of order placement.

Sizes and pipe connections

Unit		LCV3			LCV4			LCV6			LCV7		
Connections		PN16	ASME 125	BSP NPT	PN40 JIS/KS 20	ASME 150 ASME 300	NPT SW	PN40 JIS/KS20	ASME 150 ASME 300	BSP NPT SW	PN16 PN25 JIS/KS10	ASME 125 ASME 250	BSP NPT
DN15	½"	•		•	•	•	•	•	•	•	•		•
DN20	¾"	•		•	•	•	•	•	•	•	•		•
DN25	1"	•	•	•	•	•	•	•	•	•	•	•	•
DN32	1¼"	•		•	•		•	•		•	•		•
DN40	1½"	•	•	•	•	•	•	•	•	•	•	•	•
DN50	2"	•	•	•	•	•	•	•	•	•	•	•	•
DN65	2½"	•	•		•	•		•	•		•	•	
DN80	3"	•	•		•	•		•	•		•	•	
DN100	4"	•	•		•	•		•	•		•	•	

SHOPVALVES GLOBAL VALVE SOLUTIONS | 阀门易购

SHOPVALVES
GLOBAL VALVE SOLUTIONS | 阀门易购

LCV3 pressure/temperature limits

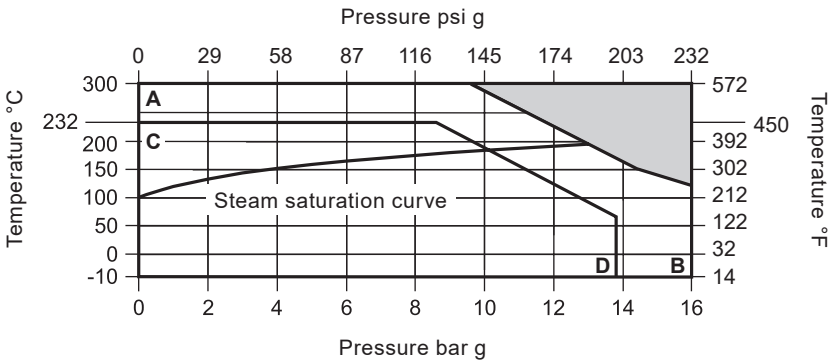

The product **must not** be used in this region.

A - B Screwed BSP and flanged EN 1092 PN16.

C - D Screwed NPT, socket weld and flanged ASME 125.

Screwed and Flanged EN 1092 PN16	Body design conditions			PN16
	PMA	Maximum allowable pressure	16 bar g @ 120 °C	232 psi g @ 248 °F
	TMA	Maximum allowable temperature	300 °C @ 9.6 bar g	572 °F @ 139 psi g
	Minimum allowable temperature		-10 °C	14 °F
	PMO	Maximum operating pressure for saturated steam service	13 bar g	189 psi g
	TMO	Maximum operating temperature	300 °C @ 9.6 bar g	572 °F @ 139 psi g
	Minimum operating temperature **Note:** For lower operating temperatures consult Spirax Sarco.		-10 °C	14 °F
	Designed for a maximum cold hydraulic test pressure of:		24 bar g	348 psi g
Flanged ASME 125	Body design conditions			ASME 125
	PMA	Maximum allowable pressure	13.8 bar g @ 65 °C	200 psi g @ 149 °F
	TMA	Maximum allowable temperature	232 °C @ 8.6 bar g	450 °F @ 125 psi g
	Minimum allowable temperature		-10 °C	14 °F
	PMO	Maximum operating pressure for saturated steam service	10 bar g	145 psi g
	TMO	Maximum operating temperature	232 °C @ 8.6 bar g	450 °F @ 125 psi g
	Minimum operating temperature **Note:** For lower operating temperatures consult Spirax Sarco.		-10 °C	14 °F
	Designed for a maximum cold hydraulic test pressure of:		20.5 bar g	297 psi g

SHOPVALVES
GLOBAL VALVE SOLUTIONS | 阀门易购

SHOPVALVES
GLOBAL VALVE SOLUTIONS | 阀门易购

LCV4 pressure/temperature limits

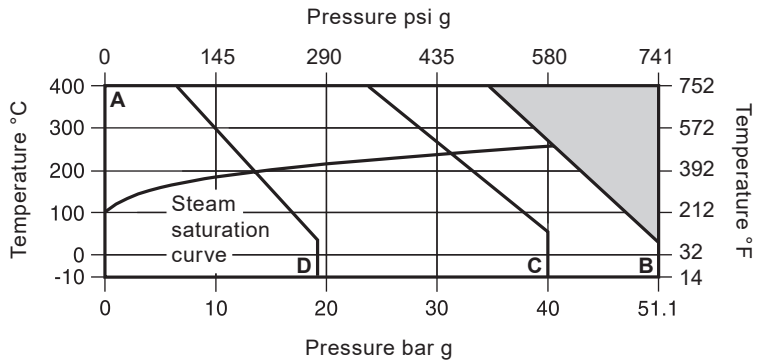

The product **must not** be used in this region.

A - B Screwed NPT, socket weld and flanged ASME 300.

A - C Flanged EN 1092 PN40.

A - D Flanged ASME 150.

Flanged JIS/KS 20 shown on next page

Flanged EN 1092 PN40	Body design conditions			PN40
	PMA	Maximum allowable pressure	40 bar g @ 50 °C	580 psi g @ 122 °F
	TMA	Maximum allowable temperature	300 °C @ 27.6 bar g	572 °F @ 400 psi g
		Maximum allowable temperature with high temperature bolting	400 °C @ 23.8 bar g	752 °F @ 345 psi g
	Minimum allowable temperature		-10 °C	14 °F
	PMO	Maximum operating pressure for saturated steam service	31.1 bar g	451 psi g
	TMO	Maximum operating temperature	300 °C @ 27.6 bar g	572 °F @ 400 psi g
		Maximum operating temperature with high temperature bolting	400 °C @ 23.8 bar g	752 °F @ 345 psi g
	Minimum operating temperature **Note:**For lower operating temperatures consult Spirax Sarco.		-10 °C	14 °F
	Designed for a maximum cold hydraulic test pressure of:		60 bar g	870 psi g
Flanged ASME 150	Body design conditions			ASME 150
	PMA	Maximum allowable pressure	19.3 bar g @ 38 °C	280 psi g @ 100 °F
	TMA	Maximum allowable temperature	300 °C @ 10.2 bar g	572 °F @ 148 psi g
		Maximum allowable temperature with high temperature bolting	400 °C @ 6.5 bar g	752 °F @ 94.3 psi g
	Minimum allowable temperature		-10 °C	14 °F
	PMO	Maximum operating pressure for saturated steam service	13.9 bar g	202 psi g
	TMO	Maximum operating temperature	300 °C @ 10.2 bar g	572 °F @ 148 psi g
		Maximum operating temperature with high temperature bolting	400 °C @ 6.5 bar g	752 °F @ 94.3 psi g
	Minimum operating temperature **Note:**For lower operating temperatures consult Spirax Sarco.		-10 °C	14 °F
	Designed for a maximum cold hydraulic test pressure of:		30 bar g	435 psi g
Screwed NPT Socket weld and Flanged ASME 300	Body design conditions			ASME 300
	PMA	Maximum allowable pressure	51.1 bar g @ 38 °C	741 psi g @ 100 °F
	TMA	Maximum allowable temperature	300 °C @ 39.8 bar g	572 °F @ 577 psi g
		Maximum allowable temperature with high temperature bolting	400 °C @ 34.7 bar g	752 °F @ 503 psi g
	Minimum allowable temperature		-10 °C	14 °F
	PMO	Maximum operating pressure for saturated steam service	41.8 bar g	606 psi g
	TMO	Maximum operating temperature	300 °C @ 39.8 bar g	572 °F @ 577 psi g
		Maximum operating temperature with high temperature bolting	400 °C @ 34.7 bar g	752 °F @ 503 psi g
	Minimum operating temperature **Note:** For lower operating temperatures consult Spirax Sarco.		-10 °C	14 °F
	Designed for a maximum cold hydraulic test pressure of:		77 bar g	1117 psi g

SHOPVALVES
GLOBAL VALVE SOLUTIONS | 阀门易购

SHOPVALVES
GLOBAL VALVE SOLUTIONS | 阀门易购

LCV4 pressure/temperature limits (continued)

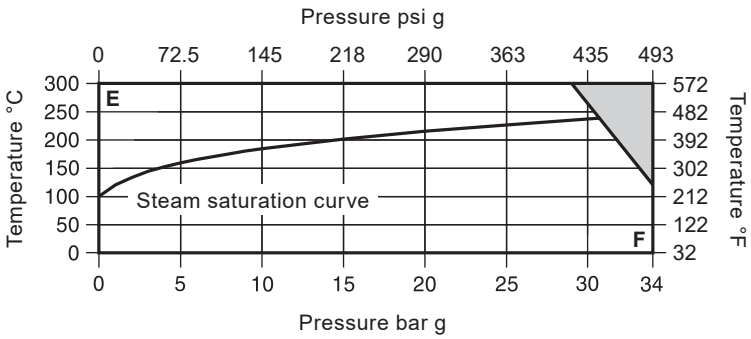

The product **must not** be used in this region.

E - F Flanged JIS/KS 20.

Flanged JIS/KS 20	Body design conditions			JIS/KS 20
	PMA	Maximum allowable pressure	34 bar g @ 120 °C	493 psi g @ 248 °F
	TMA	Maximum allowable temperature	300 °C @ 32 bar g	572 °F @ 464 psi g
		Minimum allowable temperature	0 °C	32 °F
	PMO	Maximum operating pressure for saturated steam service	30 bar g	435 psi g
	TMO	Maximum operating temperature	300 °C @ 32 bar g	572 °F @ 464 psi g
	Minimum operating temperature **Note:** For lower operating temperatures consult Spirax Sarco.		0 °C	32 °F
	Designed for a maximum cold hydraulic test pressure of:		51 bar g	740 psi g

SHOPVALVES
GLOBAL VALVE SOLUTIONS | 阀门易购

SHOPVALVES
GLOBAL VALVE SOLUTIONS | 阀门易购

LCV6 pressure/temperature limits

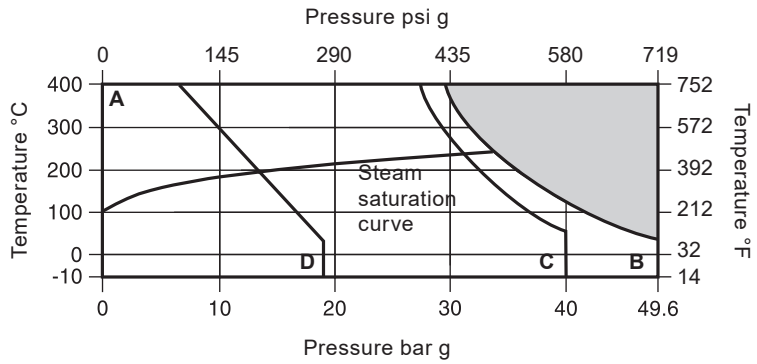

The product **must not** be used in this region.

A - B Screwed NPT, socket weld and flanged ASME 300.

A - C Screwed BSP and flanged EN 1092 PN40.

A - D Flanged ASME 150.

Flanged JIS/KS 10 shown on next page

Screwed BSP and Flanged EN 1092 PN40	Body design conditions			PN40
	PMA	Maximum allowable pressure	40 bar g @ 50 °C	580 psi g @ 122 °F
	TMA	Maximum allowable temperature	400 °C @ 27.4 bar g	752 °F @ 397 psi g
	Minimum allowable temperature		-10 °C	14 °F
	PMO	Maximum operating pressure for saturated steam service	32.3 bar g	468 psi g
	TMO	Maximum operating temperature	400 °C @ 27.4 bar g	752 °F @ 397 psi g
	Minimum operating temperature **Note:**For lower operating temperatures consult Spirax Sarco.		-10 °C	14 °F
	Designed for a maximum cold hydraulic test pressure of:		60 bar g	870 psi g
Screwed NPT Socket weld and Flanged ASME 300	Body design conditions			ASME 300
	PMA	Maximum allowable pressure	49.6 bar g @ 38 °C	719 psi g @ 100 °F
	TMA	Maximum allowable temperature	400 °C @ 29.4 bar g	752 °F @ 426 psi g
	Minimum allowable temperature		-10 °C	14 °F
	PMO	Maximum operating pressure for saturated steam service	34 bar g	493 psi g
	TMO	Maximum operating temperature	400 °C @ 29.4 bar g	752 °F @ 426 psi g
	Minimum operating temperature **Note:** For lower operating temperatures consult Spirax Sarco.		-10 °C	14 °F
	Designed for a maximum cold hydraulic test pressure of:		76 bar g	1102 psi g
Flanged ASME 150	Body design conditions			ASME 150
	PMA	Maximum allowable pressure	19 bar g @ 38 °C	276 psi g @ 100 °F
	TMA	Maximum allowable temperature	400 °C @ 6.5 bar g	752 °F @ 94.3 psi g
	Minimum allowable temperature		-10 °C	14 °F
	PMO	Maximum operating pressure for saturated steam service	13.8 bar g	200 psi g
	TMO	Maximum operating temperature	400 °C @ 6.5 bar g	752 °F @ 94.3 psi g
	Minimum operating temperature **Note:** For lower operating temperatures consult Spirax Sarco.		-10 °C	14 °F
	Designed for a maximum cold hydraulic test pressure of:		30 bar g	435 psi g

SHOPVALVES
GLOBAL VALVE SOLUTIONS | 阀门易购

SHOPVALVES
GLOBAL VALVE SOLUTIONS | 阀门易购

LCV6 pressure/temperature limits (continued)

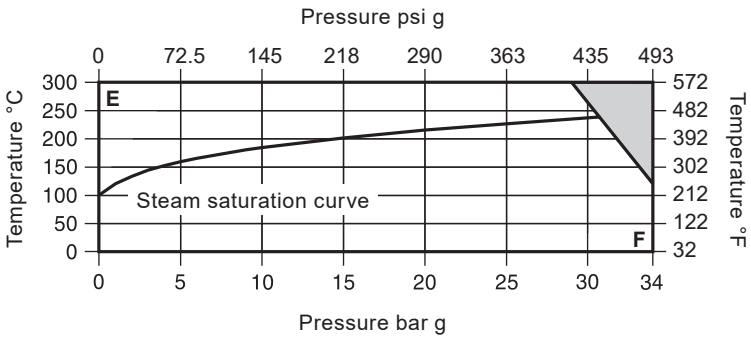

The product **must not** be used in this region.

E - F Flanged JIS/KS 20.

Flanged JIS/KS 20	Body design conditions			JIS/KS 20
	PMA	Maximum allowable pressure	34 bar g @ 120 °C	493 psi g @ 248 °F
	TMA	Maximum allowable temperature	300 °C @ 32 bar g	572 °F @ 464 psi g
	Minimum allowable temperature		0 °C	32 °F
	PMO	Maximum operating pressure for saturated steam service	23.5 bar g	341 psi g
	TMO	Maximum operating temperature	300 °C @ 32 bar g	572 °F @ 464 psi g
	Minimum operating temperature **Note:** For lower operating temperatures consult Spirax Sarco.		0 °C	32 °F
	Designed for a maximum cold hydraulic test pressure of:		51 bar g	740 psi g

SHOPVALVES
GLOBAL VALVE SOLUTIONS | 阀门易购

SHOPVALVES
GLOBAL VALVE SOLUTIONS | 阀门易购

LCV7 pressure/temperature limits

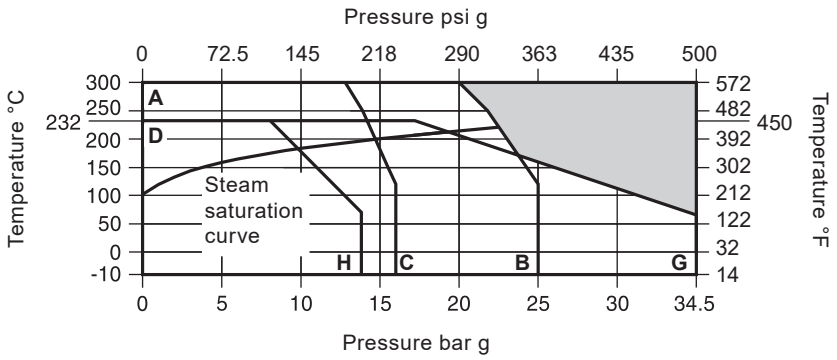

The product **must not** be used in this region.

A - B Screwed BSP and flanged EN 1092 PN25.

A - C Screwed NPT and flanged EN 1092 PN16.

D - G Flanged ASME 250.

D - H Flanged ASME 125.

Flanged JIS/KS 10 shown on next page

Flanged EN 1092 PN16	Body design conditions			PN16
	PMA	Maximum allowable pressure	16 bar g @ 120 °C	232 psi g @ 248 °F
	TMA	Maximum allowable temperature	300 °C @ 12.8 bar g	572 °F @ 186 psi g
	Minimum allowable temperature		-10 °C	14 °F
	PMO	Maximum operating pressure for saturated steam service	14.7 bar g	213 psi g
	TMO	Maximum operating temperature	300 °C @ 12.8 bar g	572 °F @ 186 psi g
	Minimum operating temperature **Note:** For lower operating temperatures consult Spirax Sarco.		-10 °C	14 °F
	Designed for a maximum cold hydraulic test pressure of:		24 bar g	348 psi g
Screwed BSP and Flanged EN 1092 PN25	Body design conditions			PN25
	PMA	Maximum allowable pressure	25 bar g @ 120 °C	363 psi g @ 248 °F
	TMA	Maximum allowable temperature	300 °C @ 20 bar g	572 °F @ 290 psi g
	Minimum allowable temperature		-10 °C	14 °F
	PMO	Maximum operating pressure for saturated steam service	22.5 bar g	326 psi g
	TMO	Maximum operating temperature	300 °C @ 20 bar g	572 °F @ 290 psi g
	Minimum operating temperature **Note:** For lower operating temperatures consult Spirax Sarco.		-10 °C	14 °F
	Designed for a maximum cold hydraulic test pressure of:		38 bar g	551 psi g
Flanged ASME 125	Body design conditions			ASME 125
	PMA	Maximum allowable pressure	13.8 bar g @ 65 °C	200 psi g @ 149 °F
	TMA	Maximum allowable temperature	232 °C @ 8.6 bar g	450 °F @ 125 psi g
	Minimum allowable temperature		-10 °C	14 °F
	PMO	Maximum operating pressure for saturated steam service	10 bar g	145 psi g
	TMO	Maximum operating temperature	232 °C @ 8.6 bar g	450 °F @ 125 psi g
	Minimum operating temperature Note: For lower operating temperatures consult Spirax Sarco.		-10 °C	14 °F
	Designed for a maximum cold hydraulic test pressure of:		20.5 bar g	297 psi g
Screwed NPT and Flanged ASME 250	Body design conditions			ASME 250
	PMA	Maximum allowable pressure	34.5 bar g @ 65 °C	500 psi g @ 149 °F
	TMA	Maximum allowable temperature	232 °C @ 17.2 bar g	450 °F @ 249 psi g
	Minimum allowable temperature		-10 °C	14 °F
	PMO	Maximum operating pressure for saturated steam service	19.4 bar g	281 psi g
	TMO	Maximum operating temperature	232 °C @ 17.2 bar g	450 °F @ 249 psi g
	Minimum operating temperature **Note:** For lower operating temperatures consult Spirax Sarco.		-10 °C	14 °F
	Designed for a maximum cold hydraulic test pressure of:		52 bar g	754 psi g

SHOPVALVES
GLOBAL VALVE SOLUTIONS | 阀门易购

SHOPVALVES
GLOBAL VALVE SOLUTIONS | 阀门易购

LCV7 pressure/temperature limits (continued)

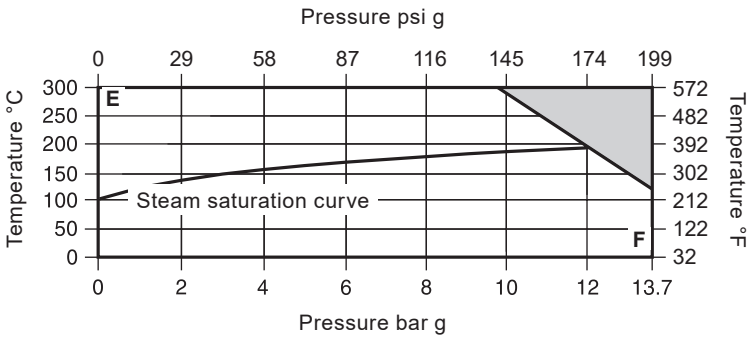

The product **must not** be used in this region.

E - F Flanged JIS/KS 10.

Flanged JIS/KS 10	Body design conditions			JIS/KS 10
	PMA	Maximum allowable pressure	13.7 bar g @ 120 °C	199 psi g @ 248 °F
	TMA	Maximum allowable temperature	300 °C @ 9.8 bar g	572 °F @ 142 psi g
	Minimum allowable temperature		0 °C	32 °F
	PMO	Maximum operating pressure for saturated steam service	12.3 bar g	178 psi g
	TMO	Maximum operating temperature	300 °C @ 9.8 bar g	572 °F @ 142 psi g
	Minimum operating temperature **Note:** For lower operating temperatures consult Spirax Sarco.		0 °C	32 °F
	Designed for a maximum cold hydraulic test pressure of:		20 bar g	290 psi g

SHOPVALVES
GLOBAL VALVE SOLUTIONS | 阀门易购

SHOPVALVES
GLOBAL VALVE SOLUTIONS | 阀门易购

Materials

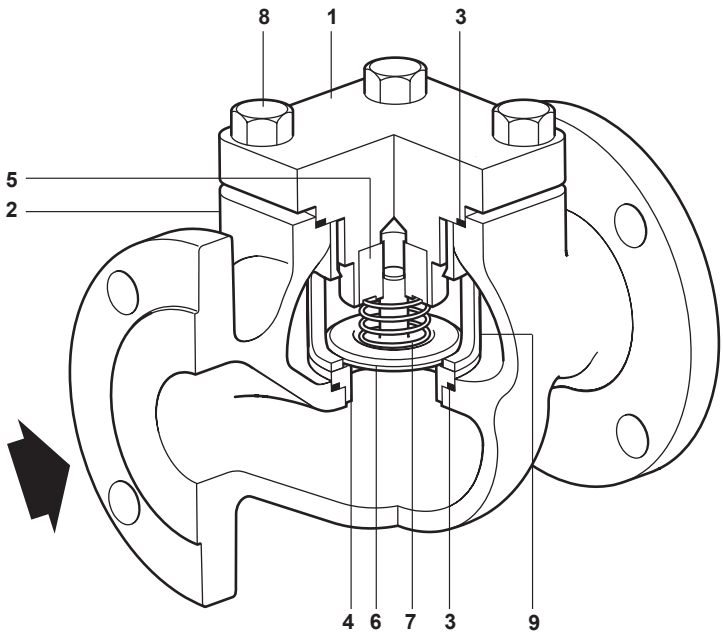

No.	Part	Material			Standard	
					PN/BSP	ASME/NPT/SW
1 and 2	Body and cover	**LCV3**	ASME	Cast iron body with SG iron cover Cover (**1**)	EN 1561 GJL250	ASTM A395
			PN	SG iron body with cast iron cover Body (**2**)	EN 1563 GJS400-15	ASTM A126 Class B
		LCV4		Carbon steel	EN 10213 1.0619+N	ASTM A216 WCB
		LCV6		Stainless steel	EN 10213 1.4408	ASTM A351-CF8M
		LCV7		SG iron	EN 1563 GJS400-18LT	ASTM A395
3	Gasket			Reinforced exfoliated graphite	Graphite	Graphite
4 and 5	Seat and guide	**LCV3**		Stainless steel	431	431
		LCV4		Stainless steel	431	431
		LCV6		Stainless steel	316L	316L
		LCV7		Stainless steel	431	431
6	Disc			Stainless steel	316L	316L
7	Spring			Stainless steel	316 S 42	316 S 42
8	Bolt	**LCV3**		Cast steel	Grade 8.8	Grade 8.8
		LCV4		Cast steel	Grade 8.8	Grade 8.8
		LCV6		Stainless steel	A2-80	A2-80
		LCV7		Cast steel	Grade 8.8	Grade 8.8
9	Seat retainer			Stainless steel	316L	316L

SHOPVALVES
GLOBAL VALVE SOLUTIONS | 阀门易购

SHOPVALVES
GLOBAL VALVE SOLUTIONS | 阀门易购

Dimensions (approximate) in mm (inches)

Please note: Flanged ASME versions are (approximate) in inches

Screwed and Socket weld

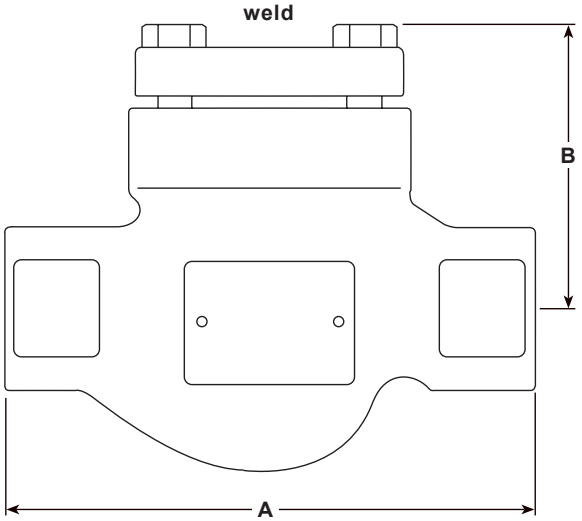

Flanged

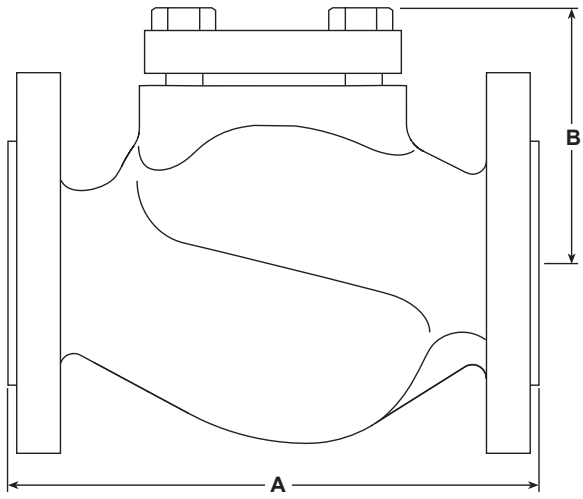

Dimension	Connection	Screwed BSP		Flanged PN40 PN16 PN25 JIS 10/KS 10 JIS 20/KS 20		Screwed NPT Socket weld		Flanged ASME 125 LCV3		Flanged ASME 125 LCV7		Flanged ASME 150		Flanged ASME 250 ASME 300	
		mm	inches	mm	inches	inches	mm	inches	mm			inches	mm	inches	mm
A	DN15 ½"	130	5.12	130	5.12	6½"	165	7¼"	184			7¼"	184	7½"	191
	DN20 ¾"	155	6.10	150	5.91										
	DN25 1"	160	6.30	160	6.30	7¾"	197			7¼"	184			7¾"	197
	DN32 1¼"	185	7.28	180	7.09	8½"	216								
	DN40 1½"	205	8.07	200	7.87	9¼"	235	8¾"	222	8¾"	222	8¾"	222	9¼"	235
	DN50 2"	230	9.06	230	9.06	10½"	267	10"	254	10"	254	10"	254	10½"	267
	DN65 2½"			290				10½"	267	10½"	267	10⅞"	276	11½"	292
	DN80 3"			310				11¾"	298	11¾"	298	11¾"	298	12½"	318
	DN100 4"			350				13¾"	349	13¾"	349	13⅞"	352	14½"	368
B	DN15 ½"	88	3.46	88	3.46	4"	102	4"	102	4"	102	4"	102	4"	102
	DN20 ¾"														
	DN25 1"														
	DN32 1¼"	117	4.61	117	4.61	5³⁄₁₆"	132								
	DN40 1½"							5³⁄₁₆"	132	5³⁄₁₆"	132	5³⁄₁₆"	132	5³⁄₁₆"	132
	DN50 2"														
	DN65 2½"			166	6.54			7⅞"	200	7⅞"	200	7⅞"	200	7⅞"	200
	DN80 3"														
	DN100 4"			180	7.09			8½"	216	8½"	216	8½"	216	8½"	216

SHOPVALVES
GLOBAL VALVE SOLUTIONS | 阀门易购

SHOPVALVES
GLOBAL VALVE SOLUTIONS | 阀门易购

Weights (approximate) in kg and lbs

Unit		LCV3				LCV4			
		Flanged		Screwed		Flanged		Screwed / Socket weld	
		kg	lbs	kg	lbs	kg	lbs	kg	lbs
DN15	**½"**	4.30	9.48 lb	3.10	6.83 lb	5.05	11.1 lb	3.65	8.05 lb
DN20	**¾"**	5.50	12.1 lb	4.10	9.04 lb	6.43	14.2 lb	5.33	11.8 lb
DN25	**1"**	5.82	12.8 lb	4.10	9.04 lb	6.58	14.5 lb	4.18	9.22 lb
DN32	**1¼"**	10.23	22.6 lb	7.20	15.9 lb	12.89	28.4 lb	9.59	21.1 lb
DN40	**1½"**	11.43	25.2 lb	8.00	17.6 lb	14.35	31.6 lb	9.55	21.1 lb
DN50	**2"**	14.96	33.0 lb	10.50	23.1 lb	16.86	37.2 lb	12.06	26.6 lb
DN65	**2½"**	27.04	59.6 lb			32.25	71.1 lb		
DN80	**3"**	29.47	65.0 lb			36.02	79.4 lb		
DN100	**4"**	48.93	108 lb			52.06	115 lb		

Unit		LCV6				LCV7			
		Flanged		Screwed / Socket weld		Flanged		Screwed	
		kg	lbs	kg	lbs	kg	lbs	kg	lbs
DN15	**½"**	5.19	11.4	3.79	8.36	4.64	10.2	3.24	7.14
DN20	**¾"**	6.60	14.6	5.50	12.1	5.89	13.0	4.29	9.46
DN25	**1"**	6.77	14.9	4.37	9.63	6.04	13.3	3.74	8.25
DN32	**1¼"**	13.37	29.5	10.07	22.2	11.99	26.4	8.69	19.2
DN40	**1½"**	14.77	32.6	9.97	22.0	13.18	29.1	9.28	20.5
DN50	**2"**	17.51	38.6	12.71	28.0	15.65	34.5	10.65	23.5
DN65	**2½"**	33.13	73.0			29.53	65.1		
DN80	**3"**	37.00	81.6			33.00	72.8		
DN100	**4"**	53.47	118			48.82	108		

Capacities

Capacity	DN15 ½"	DN20 ¾"	DN25 1"	DN32 1¼"	DN40 1½"	DN50 2"	DN65 2½"	DN80 3"	DN100 4"
Kv	5	8.3	11	18	34	42	87	113	135

For conversion:
Cv (UK) = Kv x 0.963
Cv (US) = Kv x 1.156

Opening pressures in mbar (mpsi)

Differential pressures with zero flow

Flow direction	DN15 to DN25 ½" to 1"	DN32 to DN50 1¼" to 2"	DN65 to DN100 2½" to 4"
Horizontal	22.5 (0.33 psi)	24.5 (0.36 psi)	25.5 (0.37 psi)
Vertical	20 (0.37 psi)	20 (0.37 psi)	20 (0.37 psi)

SHOPVALVES
GLOBAL VALVE SOLUTIONS | 阀门易购

SHOPVALVES
GLOBAL VALVE SOLUTIONS | 阀门易购

Safety information, installation and maintenance

For full details see the Installation and Maintenance Instructions (IM-P029-17) supplied with the product.

Installation note

Always install the lift check valve with the flow in the direction indicated on the body.

Disposal

These products are recyclable. No ecological hazard is anticipated with the disposal of these products, providing due care is taken.

How to order

Example: 1 off Spirax Sarco DN15 LCV4 lift check valve having flanged EN 1092 PN40 connections.

Spare parts

The spare parts available are shown in solid outline. Parts drawn in a grey line are not supplied as spares.

Available spares

LCV Gaskets kit (Cover gasket and seat gasket)	**Spare 1**
LCV Internals kit (Cover gasket, seat gasket, spring, disc and seat)	**Spare 2**

How to order spares

Always order spares by using the description given in the column headed 'Available spares' and state the size and type of trap. Always order spares by using the description of the LCV and Spare 1 or Spare 2.
Example: 1 off LCV Internals kit – Spare 2, for a Spirax Sarco DN15 LCV4 lift check valve having flanged EN 1092 PN40 connections.

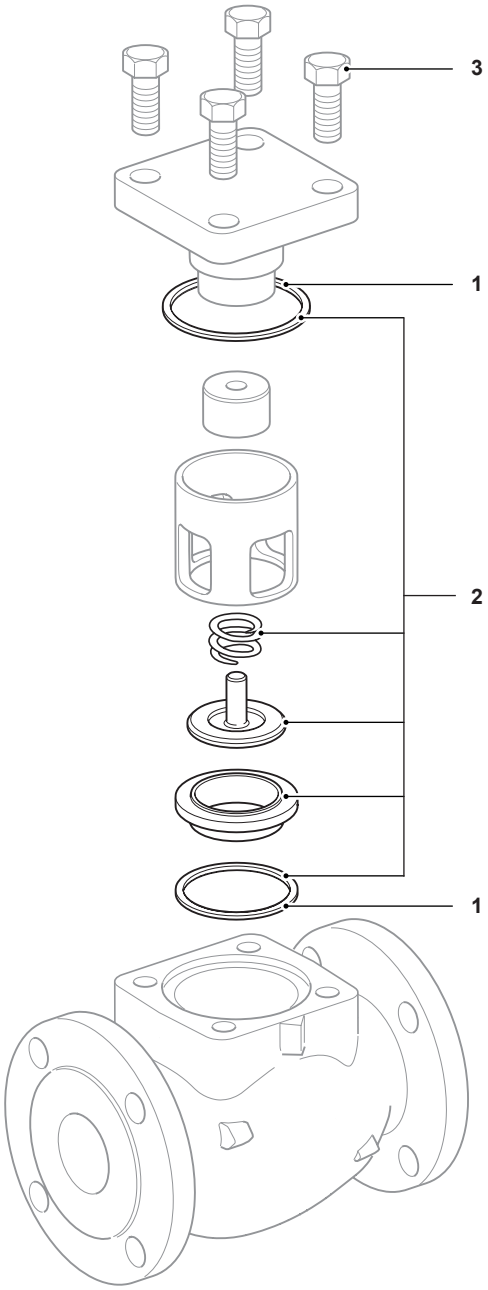

Recommended tightening torques

Item	Size		EN	ASME	EN	ASME	N m	lbf ft
3	DN15 to DN25	(½" to 1")	**LCV3** 17 A/F	⅞" A/F	**LCV3** M10	½" - 13 UNC	40 - 50	30 - 37
			Others 19 A/F		**Others** M12			
	DN32 to DN50	(1¼" to 2")	**LCV3** 19 A/F	1 1/16" A/F	**LCV3** M12	⅝" - 11 UNC	80 - 90	59 - 66
			Others 24 A/F		**Others** M16			
	DN65 to DN80	(2½" to 3")	24 A/F	1¼" A/F	M16	¾" - 9 UNC	90 - 100	66 - 74
	DN100	(4")	24 A/F	1 1/16" A/F	M16	⅝" - 11 UNC	70 - 80	52 - 66

SHOPVALVES
GLOBAL VALVE SOLUTIONS | 阀门易购