SHOPVALVES
GLOBAL VALVE SOLUTIONS | 阀门易购

1360850/18

IM-P136-03
CMGT Issue 18

spirax sarco

MFP14, MFP14S and MFP14SS Automatic Pumps

Installation and Maintenance Instructions

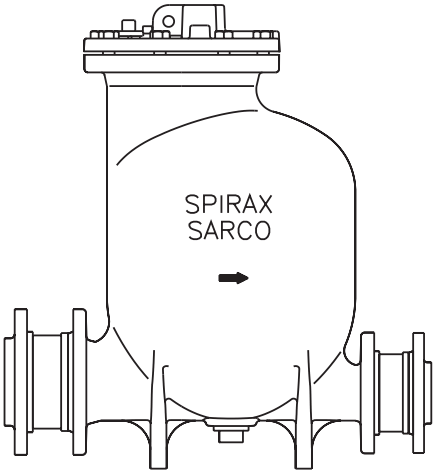

MFP14

1. Safety information
2. General product information
3. Installation
4. Commissioning
5. Operation
6. Maintenance
7. Spare parts
8. Fault finding

© Copyright 2025

Printed in GB

SHOPVALVES
GLOBAL VALVE SOLUTIONS | 阀门易购

SHOPVALVES
GLOBAL VALVE SOLUTIONS | 阀门易购

1. Safety information

Safe operation of these products can only be guaranteed if they are properly installed, commissioned, used and maintained by qualified personnel (see Section 1.11) in compliance with the operating instructions. General installation and safety instructions for pipeline and plant construction, as well as the proper use of tools and safety equipment must also be complied with.

1.1 Intended use

Referring to the Installation and Maintenance Instructions, name-plate and Technical Information Sheet, check that the product is suitable for the intended use/application.
The products listed below fully comply with the requirements of the European Pressure Equipment Directive 2014/68/EU, ATEX Directive 2014/34/EU and carry the CE and Ex marks when so required.

Note: applicable to EU countries and UK only.

The products fall within the following Pressure Equipment Directive categories:

Product		Group 2 Gases	Group 2 Liquids
MFP14	All sizes	2	SEP
MFP14S	All sizes	2	SEP
MFP14SS	All sizes	2	SEP

Product marking per ATEX Directive 2014/34/EU Ex II 2G CT3.

i) **The products have been specifically designed for use on steam, air and water/condensate which are in Group 2 of the above mentioned Pressure Equipment Directive. The products' use on other fluids may be possible but, if this is contemplated, Spirax Sarco should be contacted to confirm the suitability of the product for the application being considered.**

ii) **Check material suitability, pressure and temperature and their maximum and minimum values. If the maximum operating limits of the product are lower than those of the system in which it is being fitted, or if malfunction of the product could result in a dangerous overpressure or overtemperature occurrence, ensure a safety device is included in the system to prevent such over-limit situations.**

iii) **Determine the correct installation situation and direction of fluid flow.**

iv) **Spirax Sarco products are not intended to withstand external stresses that may be induced by any system to which they are fitted. It is the responsibility of the installer to consider these stresses and take adequate precautions to minimise them.**

v) **Remove protection covers from all connections and protective film from all name-plates, where appropriate, before installation on steam or other high temperature applications.**

1.2 Access

Ensure safe access and if necessary a safe working platform (suitably guarded) before attempting to work on the product. Arrange suitable lifting gear if required.

1.3 Lighting

Ensure adequate lighting, particularly where detailed or intricate work is required.

SHOPVALVES
GLOBAL VALVE SOLUTIONS | 阀门易购

SHOPVALVES
GLOBAL VALVE SOLUTIONS | 阀门易购

1.4 Hazardous liquids or gases in the pipeline

Consider what is in the pipeline or what may have been in the pipeline at some previous time. Consider: flammable materials, substances hazardous to health, extremes of temperature.

1.5 Hazardous environment around the product

Consider: explosion risk areas, lack of oxygen (e.g. tanks, pits), dangerous gases, extremes of temperature, hot surfaces, fire hazard (e.g. during welding), excessive noise, moving machinery.

Caution or Warning	**1.6 The system** **Consider the effect on the complete system of the work proposed. Will any proposed action (e.g. closing isolation valves, electrical isolation) put any other part of the system or any personnel at risk?** **Dangers might include isolation of vents or protective devices or the rendering ineffective of controls or alarms. Ensure isolation valves are turned on and off in a gradual way to avoid system shocks.**

	1.7 Pressure systems **Ensure that any pressure is isolated and safely vented to atmospheric pressure.** **Consider double isolation (double block and bleed) and the locking or labelling of closed valves. Do not assume that the system has depressurised even when the pressure gauge indicates zero.**

	1.8 Temperature **Allow time for temperature to normalise after isolation to avoid danger of burns.**

1.9 Tools and consumables

Before starting work ensure that you have suitable tools and/or consumables available. Use only genuine Spirax Sarco replacement parts.

1.10 Protective clothing

Consider whether you and/or others in the vicinity require any protective clothing to protect against the hazards of, for example, chemicals, high/low temperature, radiation, noise, falling objects, and dangers to eyes and face.

SHOPVALVES
GLOBAL VALVE SOLUTIONS | 阀门易购

SHOPVALVES
GLOBAL VALVE SOLUTIONS | 阀门易购

1.11 Permits to work

All work must be carried out or be supervised by a suitably competent person.
Installation and operating personnel should be trained in the correct use of the product according to the Installation and Maintenance Instructions.
Where a formal 'permit to work' system is in force it must be complied with. Where there is no such system, it is recommended that a responsible person should know what work is going on and, where necessary, arrange to have an assistant whose primary responsibility is safety and who has had specific training on pressurised systems.
Post 'warning notices' if necessary.

1.12 Handling

Manual handling of large and/or heavy products may present a risk of injury. Lifting, pushing, pulling, carrying or supporting a load by bodily force can cause injury particularly to the back. You are advised to assess the risks taking into account the task, the individual, the load and the working environment and use the appropriate handling method depending on the circumstances of the work being done.

1.13 Residual hazards

In normal use the external surface of the product may be very hot. If used at the maximum permitted operating conditions the surface temperature of these products may reach temperatures of 200 °C (392 °F).
These products are not self-draining. Take due care when dismantling or removing the product from an installation (refer to 'Maintenance instructions').

1.14 Freezing

Provision must be made to protect products which are not self-draining against frost damage in environments where they may be exposed to temperatures below freezing point.

1.15 Disposal

Unless otherwise stated in the Installation and Maintenance Instructions, this product is recyclable and no ecological hazard is anticipated with its disposal providing due care is taken.

Please visit the Spirax Sarco product compliance web pages
https://www.spiraxsarco.com/product-compliance
for up to date information on any substances of concern that may be contained within this product. Where no additional information is provided on the Spirax Sarco product compliance web page, this product may be safely recycled and/or disposed providing due care is taken. Always check your local recycling and disposal regulations.

1.16 Returning products

Customers and stockists are reminded that under EC Health, Safety and Environment Law, when returning products to Spirax Sarco they must provide information on any hazards and the precautions to be taken due to contamination residues or mechanical damage which may present a health, safety or environmental risk. This information must be provided in writing including Health and Safety data sheets relating to any substances identified as hazardous or potentially hazardous.

SHOPVALVES
GLOBAL VALVE SOLUTIONS | 阀门易购

SHOPVALVES
GLOBAL VALVE SOLUTIONS | 阀门易购

2. General product information

2.1 General description

The Spirax Sarco MFP series of automatic pumps are simply displacement receivers operated by steam (saturated or superheated) or compressed air. They are generally used to lift liquids such as condensate to a higher level. Subject to the conditions being suitable, the pump can also be used to directly drain closed vessels under vacuum or pressure. In conjunction with a float steam trap, the pump is used to effectively drain temperature controlled heat exchangers under all operating conditions.

Definition of motive steam

For clarity throughout this document, it is important to note that the term 'motive steam' is used to describe both saturated steam and superheated steam.

The Spirax Sarco MFP automatic pump range is available as follows

MFP14 SG iron body and cover

MFP14S Cast steel body and cover

MFP14SS Stainless steel body and cover

Standards

These products fully comply with the requirements of the European Pressure Equipment Directive 2014/68/EU, ATEX Directive 2014/34/EU and carry the CE and Ex marks when so required.

Note: Applicable to EU countries and UK only.

Certification

MFP14 - This product is available with certification to EN 10204 3.1.
MFP14S and MFP14SS - These products are available with certification to EN 10204 3.1 and designed in a accordance with ASME VIII Div 1.
Note: All certification/inspection requirements must be stated at the time of order placement.

Note: For further information see Technical Information Sheet TI-P136-02.

2.2 Sizes and pipe connections

MFP14	1", 1½", 2" and 3" x 2" screwed BSP T Rp (ISO 7-1).
	DN25, DN40, DN50 and DN80 x DN50; flanged EN 1092 PN16, ANSI B 16.5 Class 150 and JIS/KS B 2238 10.
MFP14S	2" screwed BSP T Rp (ISO 7-1)/NPT is available to special order.
	DN50; flanged EN 1092 PN16, ANSI B 16.5 Class 150 and JIS/KS B 2238 10.
	The ½" motive fluid inlet and 1" exhaust connections can be supplied with screwed BSP T Rp (ISO 7-1)/NPT or SW connections.
MFP14SS	2" screwed BSP T Rp (ISO 7-1) (NPT connections are available to special order).
	DN50; flanged EN 1092 PN16, ANSI B 16.5 Class 150 and JIS/KS B 2238 10.
	The ½" motive fluid inlet and 1" exhaust connections can be supplied with screwed BSP T Rp (ISO 7-1)/NPT or SW connections.

SHOPVALVES
GLOBAL VALVE SOLUTIONS | 阀门易购

SHOPVALVES
GLOBAL VALVE SOLUTIONS | 阀门易购

2.3 Pressure / temperature limits

(ADM/ASME Pressure vessel codes Version 5.0)

MFP14

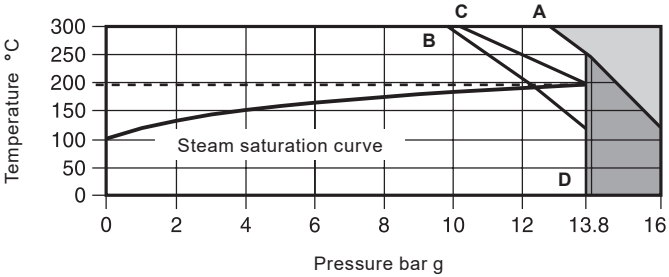

MFP14S

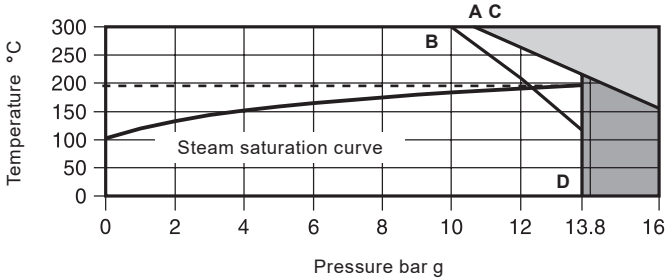

MFP14SS

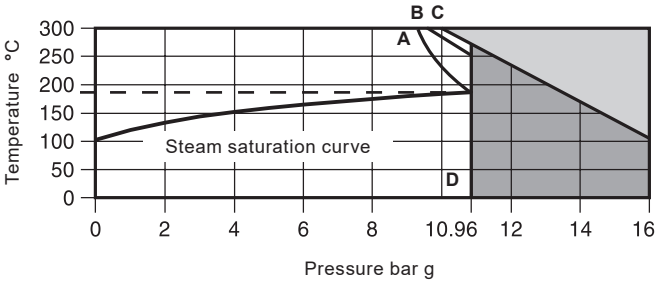

- - - - - Superheated steam should not exceed the following parameters: 13.8 bar g @ 198 °C

— — — Superheated steam should not exceed the following parameters: 10.96 bar g @ 188 °C

A - D Flanged PN16

B - D Flanged JIS/KS 10

C - D Flanged ANSI 150

The product **must not** be used in this region.

For use in this region contact Spirax Sarco - As standard this product should not be used in this region or beyond its operating range.

SHOPVALVES
GLOBAL VALVE SOLUTIONS | 阀门易购

SHOPVALVES
GLOBAL VALVE SOLUTIONS | 阀门易购

Body design conditions		PN16
Maximum motive inlet pressure (steam air or gas)	**MFP14** and **MFP14S**	13.8 bar g (PN16)
	MFP14SS	10.96 bar g (PN16)
PMA Maximum allowable pressure	**MFP14**	16 bar g @ 120 °C
	MFP14S	16 bar g @ 120 °C
	MFP14SS	16 bar g @ 93 °C
TMA Maximum allowable temperature	**MFP14**	300 °C @ 12.8 bar g
	MFP14S	300 °C @ 10.8 bar g
	MFP14SS	300 °C @ 9.3 bar g
Minimum allowable temperature. For lower temperatures consult Spirax Sarco		0 °C
PMO Maximum operating pressure	**MFP14**	13.8 bar g @ 198 °C
	MFP14S	13.8 bar g @ 198 °C
	MFP14SS	10.96 bar g @ 188 °C
TMO Maximum operating temperature	**MFP14**	198 °C @ 13.8 bar g
	MFP14S	198 °C @ 13.8 bar g
	MFP14SS	188 °C @ 10.96 bar g
Product is safe for use under full vacuum conditions		

Total lift or backpressure (static head plus pressure in the return system) must be below the motive fluid inlet pressure to allow capacity to be achieved:-
Height (H) in metres x 0.0981 plus pressure (bar g) in return line, plus downstream piping friction pressure drop in bar calculated at a flowrate of the lesser of six times the actual condensate rate or 30 000 litres/h.

Recommended filling head above the pump	0.3 m
Minimum filling head required	0.15 m (reduced capacity)
Standard pump operates with liquids of specific gravity:	1 down to 0.8

	DN40 and DN25	**DN50**	**DN80 x DN50**
Pump discharge per cycle	7 litres	12.8 litres	19.3 litres
Steam consumption	16 kg/h maximum	20 kg/h maximum	20 kg/h maximum
Air consumption (Free air)	4.4 dm³/s maximum	5.6 dm³/s maximum	5.6 dm³/s maximum
Temperature limits (Ambient Ex)	-10 °C to 200 °C	-10 °C to 200 °C	-10 °C to 200 °C

SHOPVALVES
GLOBAL VALVE SOLUTIONS | 阀门易购

SHOPVALVES
GLOBAL VALVE SOLUTIONS | 阀门易购

2.4 Materials

For parts 12 to 28, go to page 10

No.	Part		Material	
1	Cover	**MFP14**	SG iron	(EN JS 1025) EN-GTS-400-18-LT
		MFP14S	Cast steel	DIN GSC 25N/ASTM A216 WCB
		MFP14SS	Cast stainless steel	BS EN 10213-4/ASTM A351 CF3M
2	Cover gasket		Synthetic fibre	
3	Cover screws		Stainless steel	ISO 3506 Gr. A2-70
4	Body	**MFP14**	SG iron	(EN JS 1025) EN-GTS-400-18-LT
		MFP14S	Cast steel	DIN GSC 25N/ASTM A216 WCB
		MFP14SS	Cast stainless steel	1998 - 1.4409/ASTM A351 CF3M
5	Pillar	**MFP14 MFP14S**	Stainless steel	BS 970, 431 S29
		MFP14SS	Stainless steel	BS 970, 303 S31
6	Connector rod		Stainless steel	BS 1449, 304 S11
7	Float and lever		Stainless steel	AISI 304
8	Eyebolt (integral)	**MFP14**	SG iron	(EN JS 1025) EN-GTS-400-18-LT
		MFP14S	Cast steel	DIN GSC 25N/ASTM A216 WCB
		MFP14SS	Cast stainless steel	1998 - 1.4409/ASTM A351 CF3M
9	Mechanism lever		Stainless steel	BS 3146 pt. 2 ANC 2
10	Spring		DN50 and DN80 Inconel 718	ASTM 5962/ASTM B367
			DN40 Stainless steel	BS 2056 302 526 GRADE 2
11	Pressure plug	**MFP14**	Steel	DIN 267 Part III Class 5.8
		MFP14S	Steel	DIN 267 Part III Class 5.8
	Drain plug	**MFP14SS**	Stainless steel	ASTM A182 - F316

SHOPVALVES
GLOBAL VALVE SOLUTIONS | 阀门易购

SHOPVALVES
GLOBAL VALVE SOLUTIONS | 阀门易购

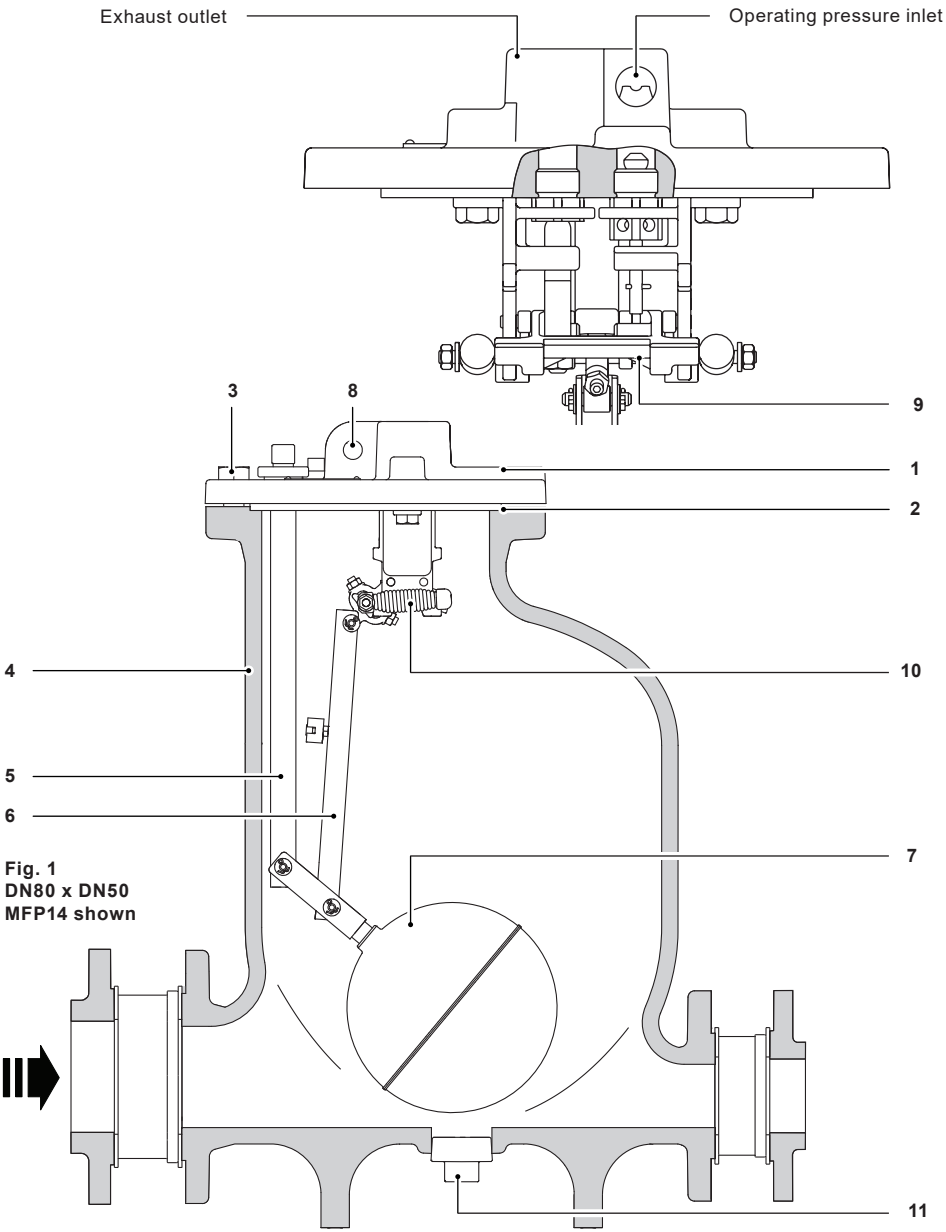

Fig. 1
DN80 x DN50
MFP14 shown

SHOPVALVES
GLOBAL VALVE SOLUTIONS | 阀门易购

SHOPVALVES
GLOBAL VALVE SOLUTIONS | 阀门易购

2.4 Materials

For parts 1 to 11, go to page 9

No.	Part		Material	
12/12a	Check valves		Stainless steel	
13	Screwed boss flanges	**MFP14**	Steel	
	Connecting flanges	**MFP14S**	Steel	DIN PN16/ANSI 150
		MFP14SS	Stainless steel	ASTM A182 - F316L
14	Mechanism bracket		Stainless steel	BS 3146 pt. 2 ANC 4B
15	Bracket screws		Stainless steel	BS 6105 Gr. A2-70
16	Inlet valve seat		Stainless steel	BS 970, 431 S29
17	Inlet valve stem		Stainless steel	ASTM A276 440 B
18	Inlet valve seat gasket		Stainless steel	BS 1449 409 S19
19	Exhaust valve seat		Stainless steel	BS 970 431 S29
20	Exhaust valve		Stainless steel	BS 3146 pt. 2 ANC 2
21	Exhaust valve seat gasket		Stainless steel	BS 1449 409 S19
22	EPM actuator		ALNICO	
23	'O' ring seal		EPDM	
24 *	Shaft		Stainless steel	BS 970 431 S29
25 *	Socket set screw		Stainless steel	BS 6105 Grade A2
26 *	Socket set screw		Stainless steel	BS 970 431 S29
27 *	Locking nut		Stainless steel	Grade A2
28	Spring anchor		Stainless steel	BS 970 431 S29

*** Note:** For item **24**, **25**, **26** and **27** see Figure 10, page 23.

SHOPVALVES
GLOBAL VALVE SOLUTIONS | 阀门易购

SHOPVALVES
GLOBAL VALVE SOLUTIONS | 阀门易购

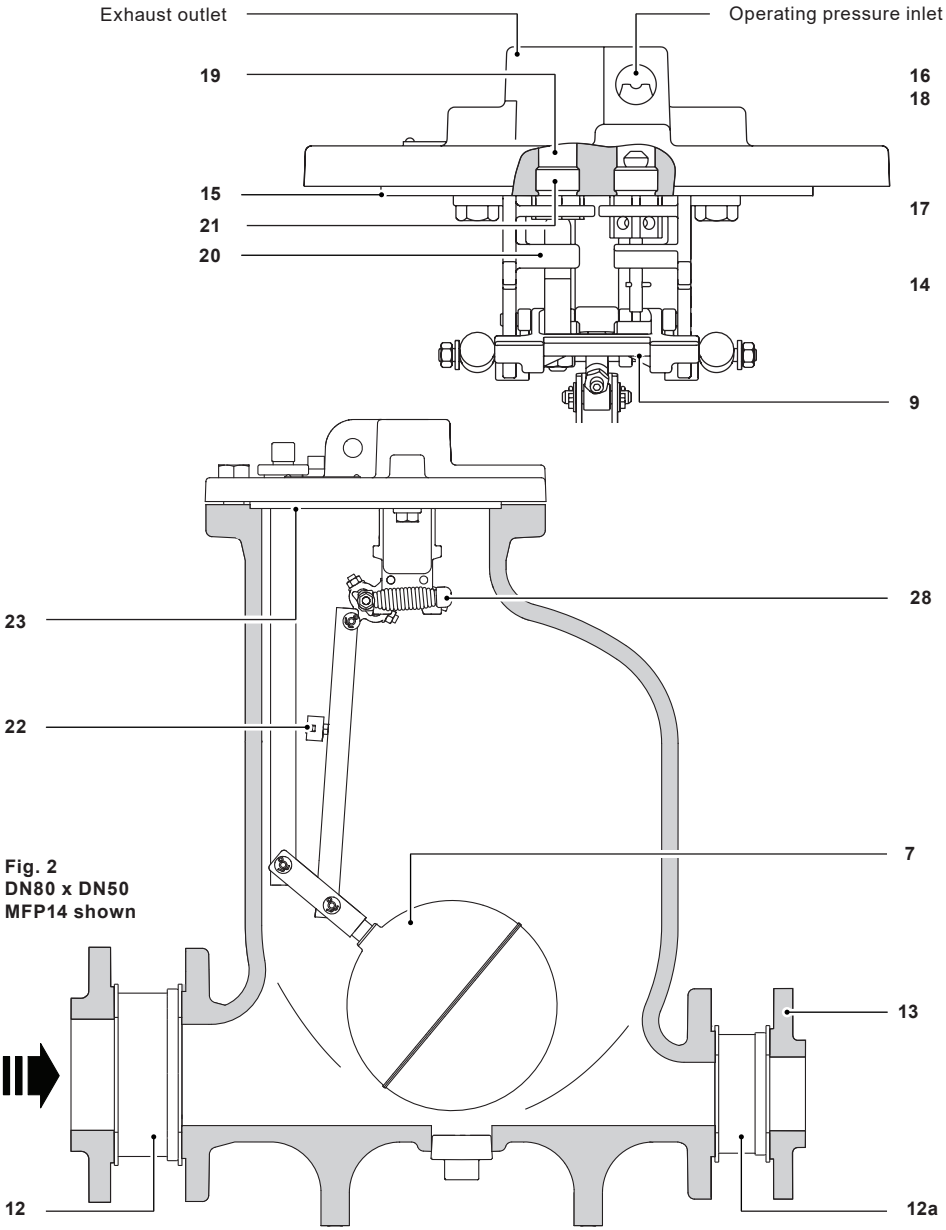

Fig. 2
DN80 x DN50
MFP14 shown

SHOPVALVES
GLOBAL VALVE SOLUTIONS | 阀门易购

SHOPVALVES
GLOBAL VALVE SOLUTIONS | 阀门易购

2.6 Dimensions/weights (approximate)

Metric (mm/kg)

MFP14

Size	A		B	C	D	E	F	G	H	J	K	L	Weights	
	JIS KS PN	ANSI			*								Pump only	Including check valves and flanges
DN25	410	-	305	507	-	68	68	480	13	18	165	Ø280	51	58
DN40	440	-	305	527	-	81	81	480	13	18	165	Ø280	54	63
DN50	557	637.5	420	642	-	104	104	580	33	18	245	Ø321	72	82
DN80 x DN50	573	637.5	420	642	430	119	104	580	33	18	245	342	88	98

Imperial (ins/lbs)

MFP14

Size	A		B	C	D	E	F	G	H	J	K	L	Weights	
	JIS KS PN	ANSI			*								Pump only	Including check valves and flanges
1"	16.1	-	12.0	19.9	-	2.7	2.7	18.9	0.5	0.7	6.5	Ø11.0	112.4	127.8
1½"	16.1	-	12.0	20.7	-	3.2	3.2	18.9	0.5	0.7	6.5	Ø11.0	119.0	138.9
2"	21.9	25.0	16.5	25.3	-	4.1	4.1	22.8	1.3	0.7	9.6	Ø12.6	158.7	180.8
3" x 2"	22.6	25.0	16.5	25.3	16.9	4.7	4.1	22.8	1.3	0.7	9.6	13.6	160.9	189.6

* **Please note:** Dimension **D** only applies to the DN80 x DN50 pump which has an oval body. The DN25, DN40 and DN50 are round bodied therefore dimension **L** is sufficient.

SHOPVALVES
GLOBAL VALVE SOLUTIONS | 阀门易购

SHOPVALVES
GLOBAL VALVE SOLUTIONS | 阀门易购

½" BSP T Rp (ISO 7-1), NPT or SW steam, compressed air or gas inlet

* **Please note:** Dimension **D** only applies to the DN80 x DN50 pump which has an oval body.
The DN25, DN40 and DN50 are round bodied therefore dimension **L** is sufficient.

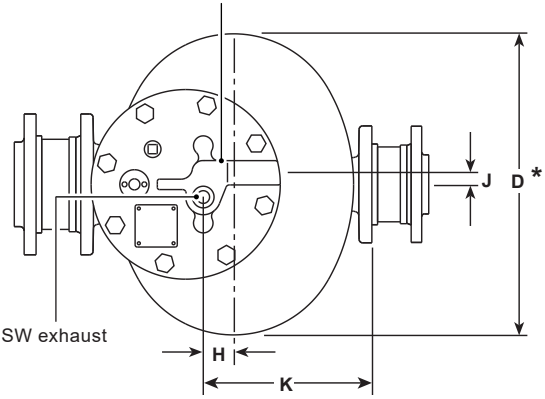

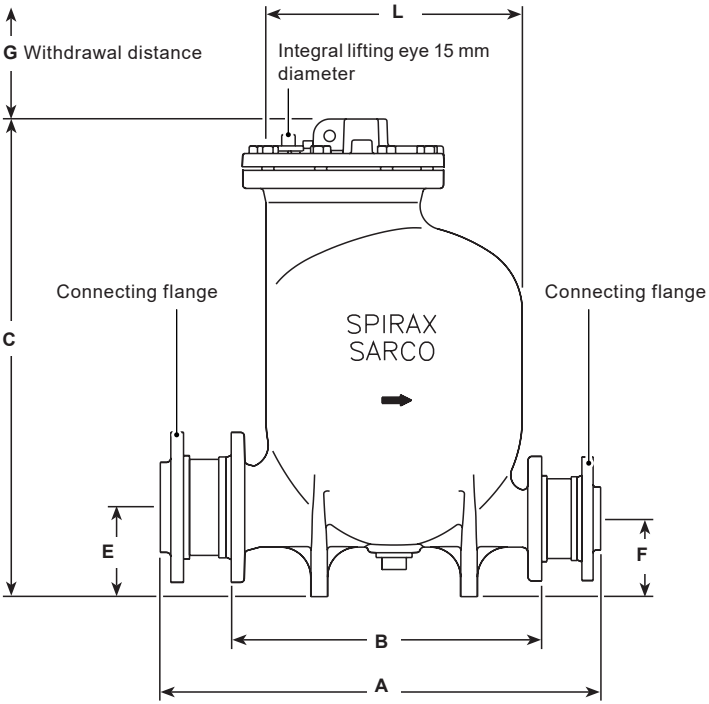

Fig. 3 DN80 x DN50 MFP14 shown

SHOPVALVES
GLOBAL VALVE SOLUTIONS | 阀门易购

SHOPVALVES
GLOBAL VALVE SOLUTIONS | 阀门易购

3. Installation

3.1a Installation - vented systems (motive steam supply)

Caution. Before installation or any maintenance is performed, ensure that all steam, air or gas lines are isolated to prevent personnel injury.

Ensure any residual internal pressure in the pump or connecting lines is carefully relieved. Also ensure any hot parts have cooled to prevent risk of injury from burns.
Always wear appropriate safety clothing before carrying out any installation or maintenance work.

An integral lifting eye is fitted to the pump to assist lifting. On no account should this be used to lift anything more than the pump. Always use suitable lifting gear and ensure the pump is safely secured.

1. Install the pump below the equipment to be drained with the exhaust connection vertically upwards. Pump should be installed with the recommended filling head (the vertical distance between the top of the pump and the bottom of the reservoir/receiver), see Section 3.2 and Fig. 5. For other filling head variations, refer to separate capacity chart.

2. To prevent equipment flooding during the pump discharge stroke, a vented receiver or reservoir pipe should be installed in a horizontal plane ahead of the pump as shown in Fig. 4. For proper receiver/reservoir sizing, refer to Tables 1 and 2 on pages 16 and 17. All inlet line fittings must be full bore.

3. Connect the check valves (**12**) and (**12a**) to the pump making sure that the flow through the valves is in the correct direction. For best performance, horizontal piping runs immediately ahead of the inlet check valve and after the discharge check valve should be kept to a minimum. Connect the discharge to the return main or other return point. Torque tighten inlet and outlet flange bolts to 76 - 84 N m (56 - 62 lbf ft).

4. Connect the operating medium (steam, air or gas) supply to the motive supply inlet in the cover (see Fig. 4 and 5). Steam motive supply should have: A strainer, needle valve (to optimise the motive supply pressure during commissioning) and a steam trap (discharging to the receiver or reservoir piping) installed upstream of the supply inlet. Compressed air motive supply should have: A filter regulator and needle valve installed upstream of the supply inlet.
   Note: Ancillary valves and equipment must be Ex rated if this is a requirement for the installation.

   *** The operator should adjust the needle valve (or pressure regulator) whilst the pump is operating to ensure the motive pressure is reduced to achieve an optimised pressure for the system. This should not exceed the recommended maximum motive/back pressure differential limit of 4 bar g to maximise the service life of the pump.**

5. The pump exhaust line must be piped unreduced and unrestricted to atmosphere. The line should be vertical, if possible. If horizontal runs must be used, line should be pitched so that it is self-draining to the pump or reciever. Refer to Table 3 for the recommended vent pipe sizing, page 19.

SHOPVALVES
GLOBAL VALVE SOLUTIONS | 阀门易购

SHOPVALVES
GLOBAL VALVE SOLUTIONS | 阀门易购

Warning 1
Consideration of Condensate Temperature Increase
In situations where the temperature of the motive steam is considerably higher than that of the condensate, it is important that the design of the system located downstream of the pump adequately addresses this temperature difference.

Warning 2
Control of Motive Pressure and Risk Assessment
It is essential to implement reliable and effective control of the motive pressure supplied to the pump. This control is necessary to ensure that the temperatures within the system do not exceed the maximum allowable temperature limits specified for the equipment. It is the responsibility of the user to conduct an appropriate level of risk assessment for the application. This assessment should ensure that all necessary precautions are in place and that the system operates within safe parameters at all times.

Installation with motive steam supply (recommended for steam systems)

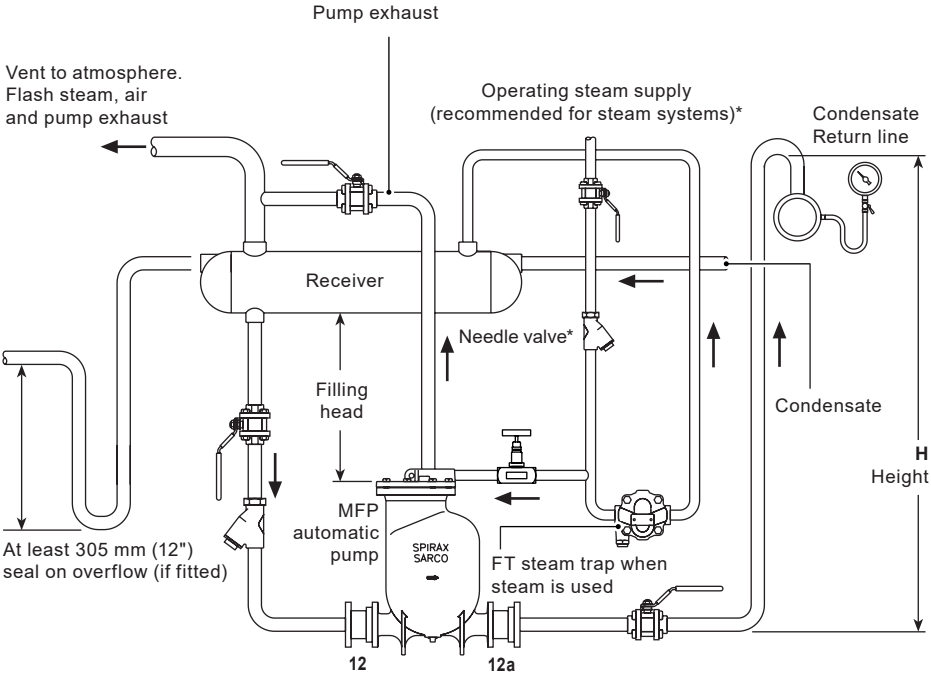

Fig. 4

SHOPVALVES
GLOBAL VALVE SOLUTIONS | 阀门易购

SHOPVALVES
GLOBAL VALVE SOLUTIONS | 阀门易购

3.1b Installation - vented systems (motive air supply)

Caution. Before installation or any maintenance is performed, ensure that all steam, air or gas lines are isolated to prevent personnel injury.

Ensure any residual internal pressure in the pump or connecting lines is carefully relieved. Also ensure any hot parts have cooled to prevent risk of injury from burns.
Always wear appropriate safety clothing before carrying out any installation or maintenance work.

An integral lifting eye is fitted to the pump to assist lifting. On no account should this be used to lift anything more than the pump. Always use suitable lifting gear and ensure the pump is safely secured.

1. Install the pump below the equipment to be drained with the exhaust connection vertically upwards. Pump should be installed with the recommended filling head (the vertical distance between the top of the pump and the bottom of the reservoir/receiver), see Section 3.2 and Fig. 5. For other filling head variations, refer to separate capacity chart.

2. To prevent equipment flooding during the pump discharge stroke, a vented receiver or reservoir pipe should be installed in a horizontal plane ahead of the pump as shown in Fig. 4. For proper receiver/reservoir sizing, refer to Tables 1 and 2 on pages 16 and 17. All inlet line fittings must be full bore.

3. Connect the check valves (**12**) and (**12a**) to the pump making sure that the flow through the valves is in the correct direction. For best performance, horizontal piping runs immediately ahead of the inlet check valve and after the discharge check valve should be kept to a minimum. Connect the discharge to the return main or other return point. Torque tighten inlet and outlet flange bolts to 76 - 84 N m (56 - 62 lbf ft).

4. Connect the operating medium (steam, air or gas) supply to the motive supply inlet in the cover (see Fig. 4 and 5). Steam motive supply should have: A strainer, needle valve (to optimise the motive supply pressure during commissioning) and a steam trap (discharging to the receiver or reservoir piping) installed upstream of the supply inlet. Compressed air motive supply should have: A filter regulator and needle valve installed upstream of the supply inlet.
   Note: Ancillary valves and equipment must be Ex rated if this is a requirement for the installation.

   *** The operator should adjust the needle valve (or pressure regulator) whilst the pump is operating to ensure the motive pressure is reduced to achieve an optimised pressure for the system. This should not exceed the recommended maximum motive/back pressure differential limit of 4 bar g to maximise the service life of the pump.**

5. The pump exhaust line must be piped unreduced and unrestricted to atmosphere. The line should be vertical, if possible. If horizontal runs must be used, line should be pitched so that it is self-draining to the pump or reciever. Refer to Table 3 for the recommended vent pipe sizing, page 19.

SHOPVALVES
GLOBAL VALVE SOLUTIONS | 阀门易购

SHOPVALVES
GLOBAL VALVE SOLUTIONS | 阀门易购

Warning 1
Consideration of Condensate Temperature Increase
In situations where the temperature of the motive steam is considerably higher than that of the condensate, it is important that the design of the system located downstream of the pump adequately addresses this temperature difference.

Warning 2
Control of Motive Pressure and Risk Assessment
It is essential to implement reliable and effective control of the motive pressure supplied to the pump. This control is necessary to ensure that the temperatures within the system do not exceed the maximum allowable temperature limits specified for the equipment. It is the responsibility of the user to conduct an appropriate level of risk assessment for the application. This assessment should ensure that all necessary precautions are in place and that the system operates within safe parameters at all times.

Installation with motive air supply

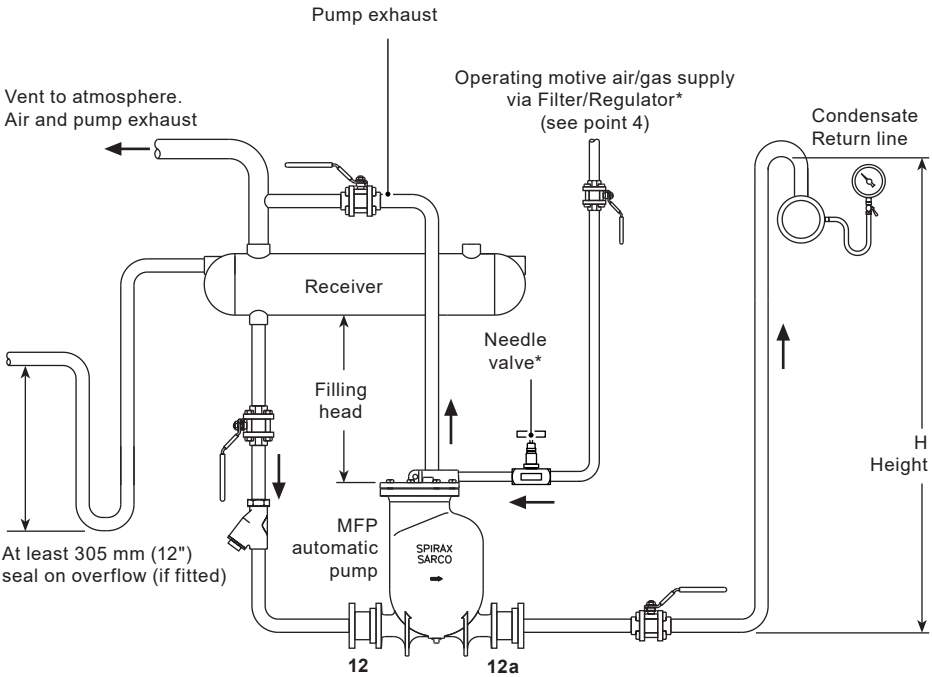

Fig. 5

SHOPVALVES
GLOBAL VALVE SOLUTIONS | 阀门易购

SHOPVALVES
GLOBAL VALVE SOLUTIONS | 阀门易购

3.2 Filling head/installation head

There is often confusion between filling head and installation head. Care must be taken when calculating them. Filling head is measured from the top of the pump cover to the bottom of the receiver, installation head is measured from the bottom of the receiver to the ground.

Recommended	**Filling head**	300 mm (12") Minimum 150 mm (6") with reduced capacity
	Installation head	Maximum 1 m (39")

Note:
To achieve the rated capacity, the pump must be installed with the check valves as supplied by Spirax Sarco.

Table 1 Inlet receiver capacities

Sufficient reservoir volume is needed above the filling head level to accept the condensate reaching pump during the discharge stroke. The receiver can be a length of pipe of large diameter or a tank. If desired, receiver overflow piping can be installed as shown in Fig.4 and Fig. 5 in Section 3 and piped to a suitable drain. The piping must form a U-type water seal at least 305 mm (12")deep immediately after the receiver.

Pump size	**Receiver size**	
	Metric	**Imperial**
DN25	0.60 m x DN200	24" x 8"
DN40	0.60 m x DN200	24" x 8"
DN50	0.65 m x DN250	26" x 10"
DN80 x DN50	1.10 m x DN250	44" x 10"

SHOPVALVES
GLOBAL VALVE SOLUTIONS | 阀门易购

SHOPVALVES
GLOBAL VALVE SOLUTIONS | 阀门易购

Table 2 Inlet piping with no receiver fitted

When draining a single piece of equipment and a receiver is not supplied ahead of the pump, install with sufficient piping as given in the table below, and use the recommended filling head. This will prevent any flooding of the equipment while the pump is discharging.

Note: The Table below illustrates the length of reservoir piping above the top of the pump when the pump is installed without a receiver.

Metric and Imperial

Pump sizes - DN25, DN40, DN50, DN80 x DN50 (1", 1½", 2", 3" x 2")									
Liquid load		**Inlet check valve and pipe size**							
kg/h	**(lb/h)**	**DN25 m**	**1" ft**	**DN40 m**	**1½" ft**	**DN50 m**	**2" ft**	**DN80 x 50 m**	**3" x 2" ft**
598 or less	**277 or less**	3.9	1.2						
546	**454**	6.6	2.0	3.9	1.2				
1 500	**681**	9.8	3.0	4.9	1.5	4	1.2		
2 000	**908**	13.1	4.0	5.9	1.8	5	1.5		
3 000	**1 362**			9.8	3.0	7	2.1		
4 000	**1 816**			11.8	3.6	10	3.0		
5 000	**2 270**					12	3.6	4	1.2
6 000	**2 724**							5	1.5
7 000	**3 178**							6	1.8
8 000	**3 632**							7	2.1
9 000	**4 086**							8	2.4
10 000	**4 540**							9	2.7
11 000	**9 994**							10	3.0

Table 3 Receiver vent sizing

The minimum vent diameter of the receiver should be as follows:

Pump size		**Receiver vent diameter**	
DN25	**1"**	50 mm	(2")
DN40	**1½"**	65 mm	(2½")
DN50	**2"**	80 mm	(3")
DN80 x DN50	**3" x 2"**	100 mm	(4")

SHOPVALVES
GLOBAL VALVE SOLUTIONS | 阀门易购

SHOPVALVES
GLOBAL VALVE SOLUTIONS | 阀门易购

3.3 Installation - closed loop steam systems

Note: A closed-loop steam installation is one in which the exhaust line of the pump is piped back (pressure equalized) to the steam space being drained.

⚠	**Caution** **Before installation or any maintenance is performed, ensure that all steam, air or gas lines are isolated to prevent personnel injury.** **Ensure any residual internal pressure in the pump or connecting lines is carefully relieved. Also ensure any hot parts have cooled to prevent risk of injury from burns.** **Always wear appropriate safety clothing before carrying out any installation or maintenance work.** **An integral lifting eye is fitted to the pump to assist lifting (pump weighs 70 kg, 154 lbs). On no account should this be used to lift anything more than the pump. Always use suitable lifting gear and ensure the pump is safely secured.**

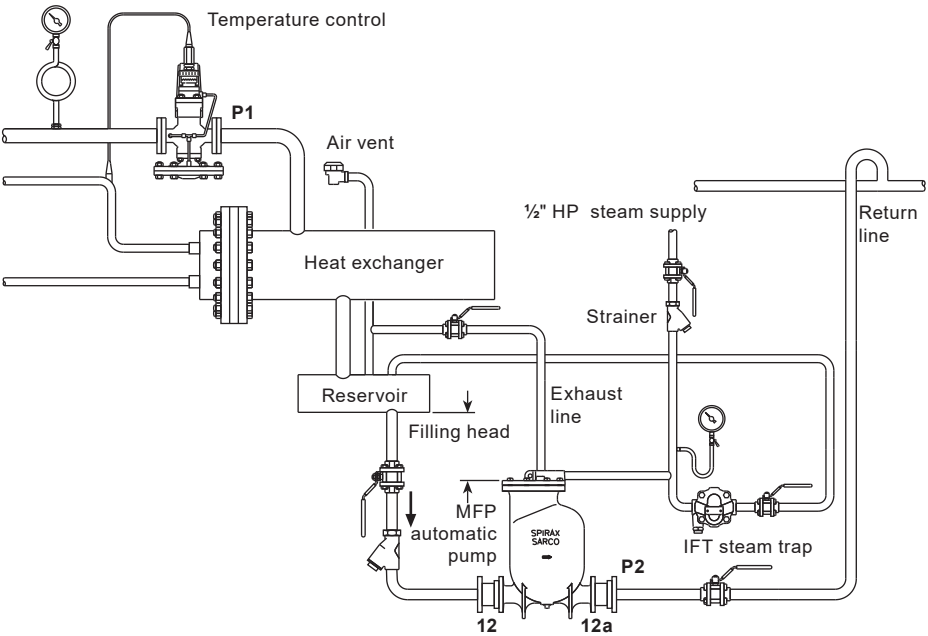

Fig. 6
Draining L.P. heat exchanger to overhead return. Pressure at pump outlet **P2** exceeds pressure of supply to heat exchanger **P1**.

SHOPVALVES
GLOBAL VALVE SOLUTIONS | 阀门易购

SHOPVALVES
GLOBAL VALVE SOLUTIONS | 阀门易购

Note: If pumping a potentially explosive media, the motive supply media must be an inert gas with no oxygen present.

1. Install the pump below the equipment being drained with the exhaust connection vertically upwards. The pump should be installed with the recommended filling head (vertical distance between the top of the pump and the bottom of the reservoir/receiver), see Section 3.2 and Figs. 6 and 7. For other filling head variants, refer to separate capacity chart.

2. To prevent equipment flooding during the pump discharge stroke, a vented receiver or reservoir pipe should be installed in a horizontal plane ahead of the pump as shown in Fig. 6. For proper receiver/reservoir sizing refer to Tables 1 and 2 on pages 18 and 19. All inlet fittings must be full bore.

3. Connect the check valves (**12**) and (**12a**) to the pump, making sure that the flow through the valves is in the correct direction. For best performance, horizontal piping runs immediately ahead of the inlet check valve and after the discharge check valve should be kept to a minimum. Connect the discharge to the return main or other return point.
   Torque tighten inlet and outlet flange bolts to 76 - 84 N m (56 - 62 lbf ft).

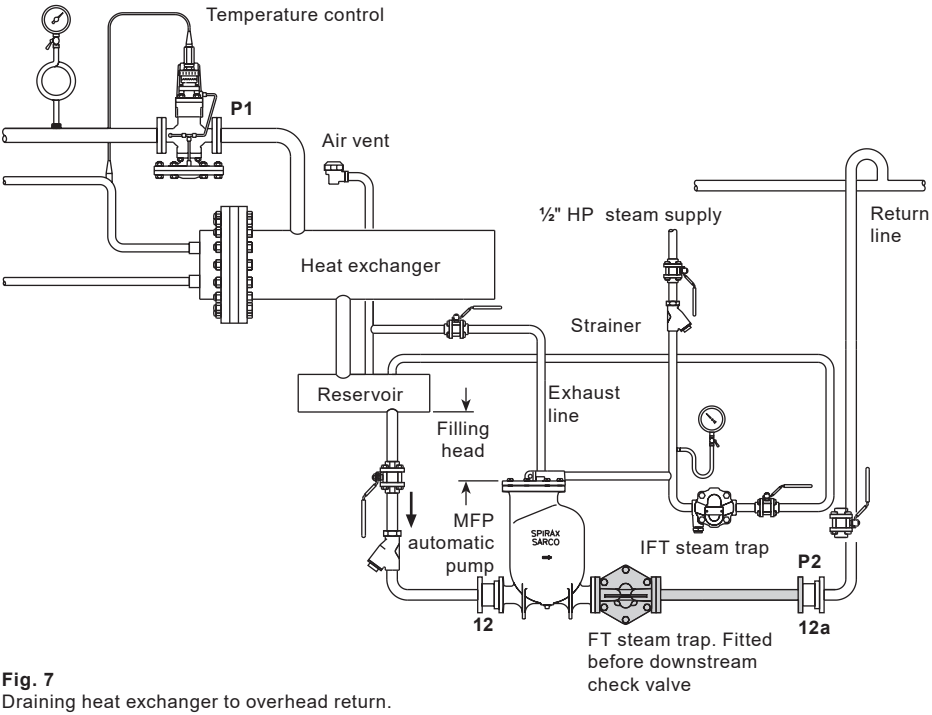

Fig. 7
Draining heat exchanger to overhead return.
Pressure at pump outlet **P2** does not always exceed pressure of supply to heat exchanger **P1**.

SHOPVALVES
GLOBAL VALVE SOLUTIONS | 阀门易购

SHOPVALVES
GLOBAL VALVE SOLUTIONS | 阀门易购

4. Connect the operating medium (steam only) supply to the motive supply inlet in the cover (see Fig. 4). Motive steam supply should have a strainer, needle valve (to optimise the motive supply pressure during commissioning) and a steam trap (discharging to the receiver or reservoir piping) installed upstream of the supply inlet.'

   Note: Ancillary valves and equipment must be Ex rated if this is a requirement for the installation.

   * The operator should adjust the needle valve (or pressure regulator) whilst the pump is operating to ensure the motive pressure is reduced to achieve an optimised pressure for the system. This must not exceed the recommended maximum motive/back pressure differential limit of 4 bar g.

5. Exhaust line should be piped, unrestricted, to the reservoir. (In some specific cases it can be connected to the inlet pipe between the control valve and the equipment or directly into the top (inlet side) of the equipment). A thermostatic air vent should be installed at the highest point of the exhaust line to vent all non-condensibles during start-up. Any horizontal runs in the exhaust line should be pitched so that the line is self-draining.

6. If, at any time, the backpressure against the pump is less than the pressure in the equipment being drained, a properly sized float and thermostatic trap must be installed between the pump and discharge check valve as shown in Fig. 9.

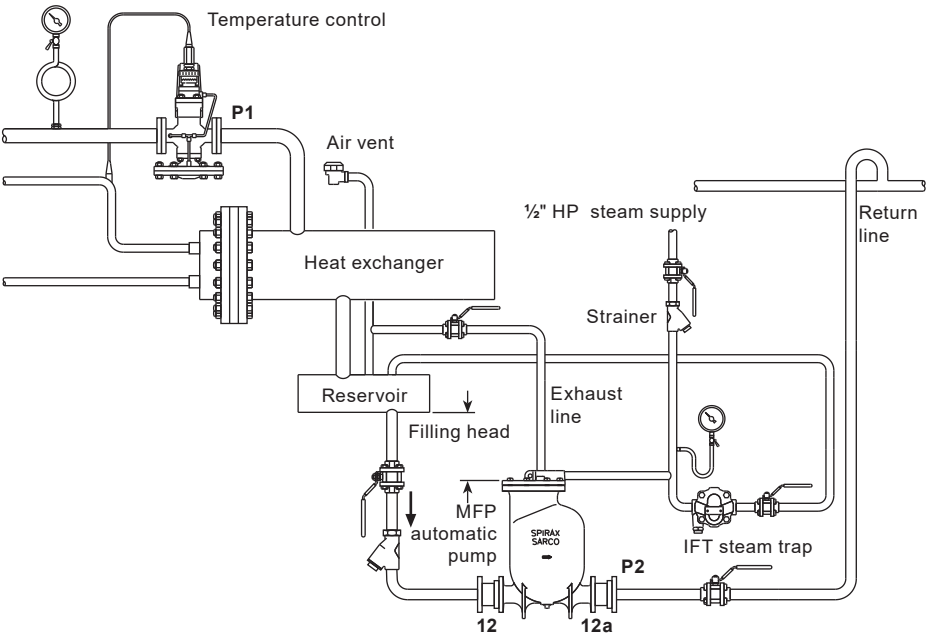

Fig. 8
Draining L.P. heat exchanger to overhead return. Pressure at pump outlet **P2** exceeds pressure of supply to heat exchanger **P1**.

SHOPVALVES
GLOBAL VALVE SOLUTIONS | 阀门易购

SHOPVALVES
GLOBAL VALVE SOLUTIONS | 阀门易购

Warning 1
Consideration of Condensate Temperature Increase
In situations where the temperature of the motive steam is considerably higher than that of the condensate, it is important that the design of the system located downstream of the pump adequately addresses this temperature difference.

Warning 2
Control of Motive Pressure and Risk Assessment
It is essential to implement reliable and effective control of the motive pressure supplied to the pump. This control is necessary to ensure that the temperatures within the system do not exceed the maximum allowable temperature limits specified for the equipment. It is the responsibility of the user to conduct an appropriate level of risk assessment for the application. This assessment should ensure that all necessary precautions are in place and that the system operates within safe parameters at all times.

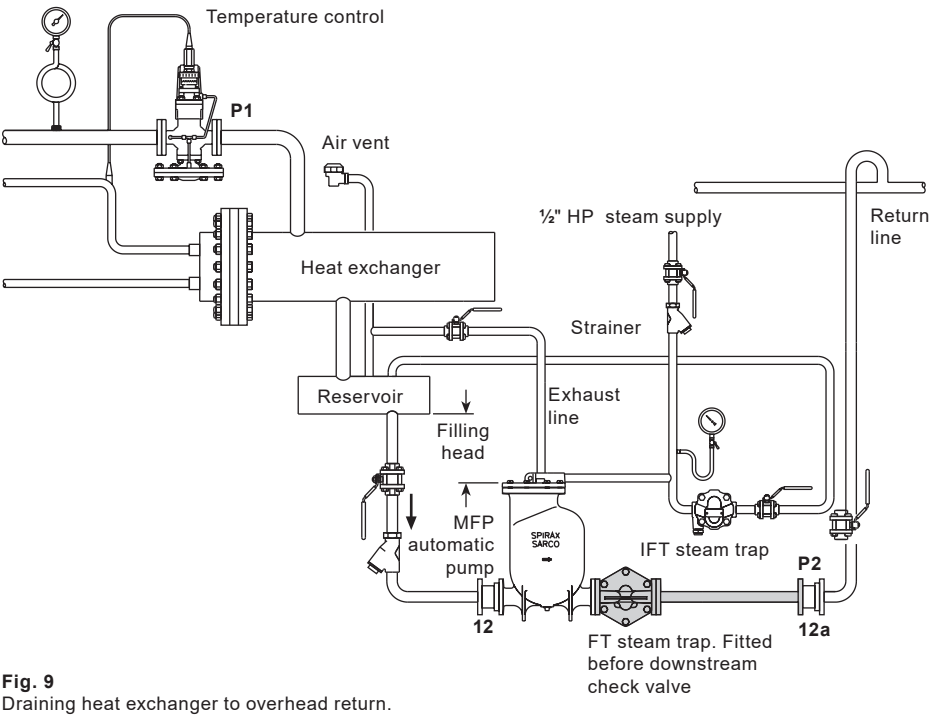

Fig. 9
Draining heat exchanger to overhead return.
Pressure at pump outlet **P2** does not always exceed pressure of supply to heat exchanger **P1**.

SHOPVALVES
GLOBAL VALVE SOLUTIONS | 阀门易购

SHOPVALVES
GLOBAL VALVE SOLUTIONS | 阀门易购

4. Commissioning

1. Slowly open supply (steam, air or gas) to provide pressure at the MFP pump inlet valve. Check that trap is operational.
2. Open isolation valves in the condensate inlet and discharge line.
3. Open valve(s) ahead of the unit allowing condensate to enter the receiver and fill the pump body. Pump will discharge when full.
4. Observe operation for any abnormalities. MFP pump(s) should cycle periodically (minimum cycle time is 8 seconds) with an audible exhaust at the end of the pumping cycle. If any irregularities are observed, recheck installation instructions for proper arrangement - also reference Section 8 - Fault finding. Consult Spirax Sarco if necessary.
5. If overflow piping has been provided, check that a water seal has been established to prevent any steam from being emitted in normal operation. Prime piping if necessary.

5. Operation

1. Before start up the float (**7**) is at its lowest position with the steam valve (**17**) closed and exhaust valve (**20**) open (Fig. 11).
2. When liquid flows by gravity through inlet check valve (**12**) into the pump body, the float (**7**) will rise.
3. As the float (**7**) continues to rise the mechanism link (**9**) is engaged which increases the tension in the springs (**10**). When the float (**7**) has risen to its upper tripping position, the linkage mechanism snaps upward over centre. The energy in the springs is released as mechanism link (**9**) accelerates upward, simultaneously opening the motive steam inlet valve and closing the exhaust valve (Fig. 10).
4. Steam flow through the inlet valve (**17**) increases the pressure within the body. This closes the inlet check valve (**12**) and forces out the liquid through the discharge check valve (**12a**).
5. As the liquid level in the pump body falls the float lowers and the mechanism link (**9**) is engaged, which again increases the tension in the springs (**10**). When the float reaches the lower tripping position, the linkage mechanism snaps downward over centre. The energy in the spring is released thus accelerating the mechanism downward simultaneously opening the exhaust valve and closing the steam inlet valve.
6. When the pressure in the pump body has exhausted to the same level as the pressure in the inlet pipe, the inlet check valve opens. Liquid will again flow through the check valve to fill the body and begin the next cycle.

SHOPVALVES
GLOBAL VALVE SOLUTIONS | 阀门易购

SHOPVALVES
GLOBAL VALVE SOLUTIONS | 阀门易购

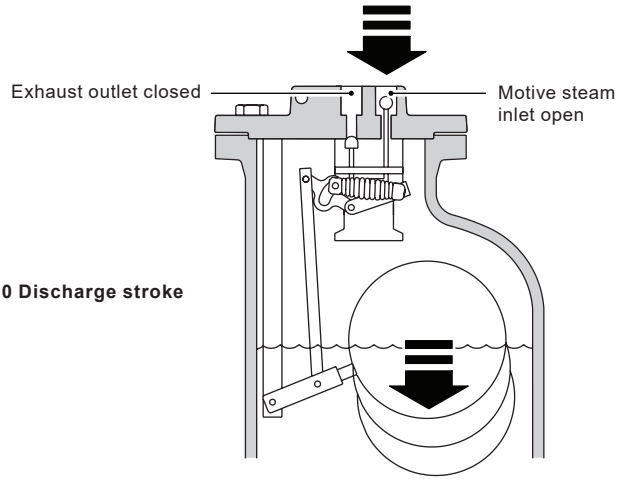

Fig. 10 Discharge stroke

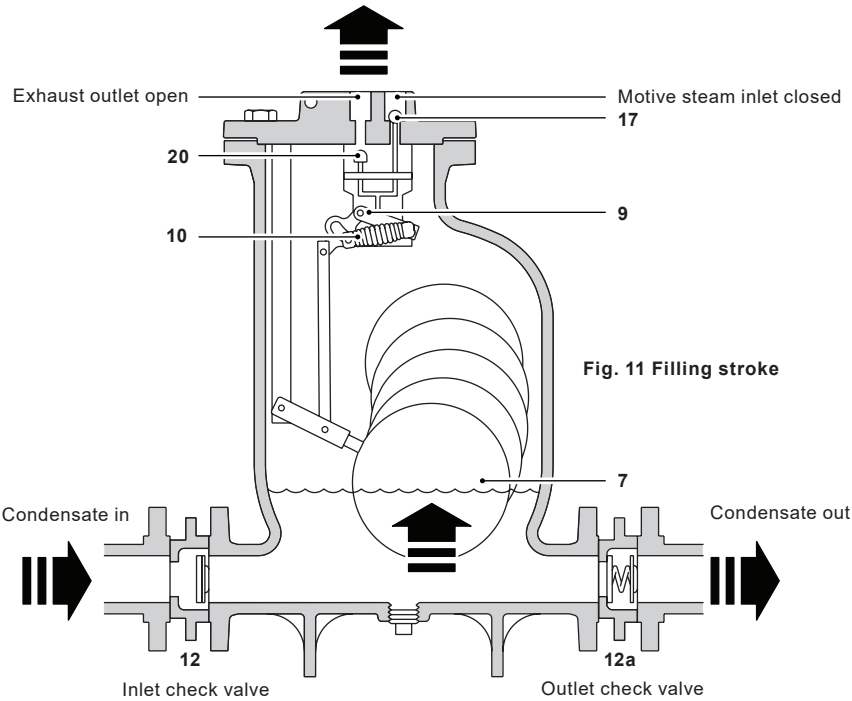

Fig. 11 Filling stroke

SHOPVALVES
GLOBAL VALVE SOLUTIONS | 阀门易购

SHOPVALVES
GLOBAL VALVE SOLUTIONS | 阀门易购

6. Maintenance

Mechanism inspection and repair

Caution. Before installation or any maintenance is performed, ensure that all steam condensate, air or gas lines are isolated to prevent personnel injury.

Consider what media or substance may have been or be within the pump and ascertain what possible hazards or injury may be caused by opening the pump.

Ensure any residual internal pressure in the pump or connecting lines is carefully relieved. Also ensure any hot parts have cooled to prevent risk of injury from burns.

Always wear appropriate safety clothing before carrying out any installation or maintenance work.

An integral lifting eye is fitted to the pump to assist lifting. On no account should this be used to lift anything more than the pump.

Always use suitable lifting gear and ensure the pump is safely secured. When dismantling the pump, care should be taken to prevent personal injury from the strong snap action mechanism. Always handle with care.

1. Disconnect all connections to the cover. Remove cover bolts and lift the cover and mechanism assembly from the body, noting the cover orientation.
2. Visually inspect the mechanism to verify that it is free of dirt and scale and moves freely.
   Note: The socket set screws (Fig. 12 items 25, 26) are factory set and must not be disturbed during the following maintenance procedures.
3. Visually check springs (item **10**, Fig. 13). If defective, remove nuts and washers and slide spring assemblies from shafts. Replace with new spring assemblies (see Step 5e -spring setting) and install new nuts and washers, using Loctite 620 adhesive on threads of shaft.

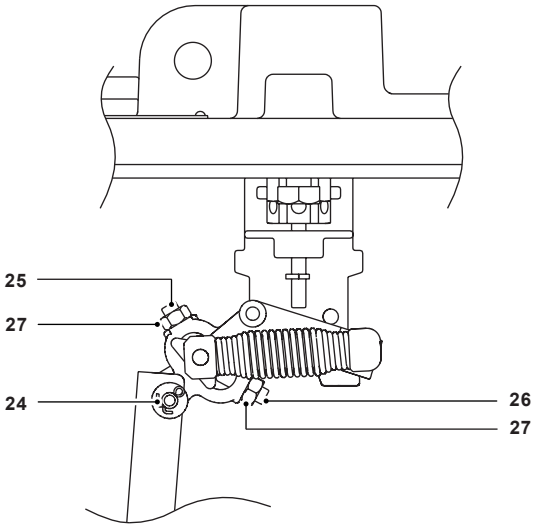

Fig. 12

SHOPVALVES
GLOBAL VALVE SOLUTIONS | 阀门易购

SHOPVALVES
GLOBAL VALVE SOLUTIONS | 阀门易购

4. To check inlet and exhaust valves:-

a. Remove shaft (item **24**, Fig. 12) from mechanism end of connector rod and rotate float and connector rod to opposite side of pillar.

b. Remove spring split pins/washers and nuts and slide spring assemblies from pivot shafts.

c. Remove locking nut from inlet valve stem. **Note:** this has been secured using loctite 620 adhesive.

d. Remove mechanism bracket screws and lift mechanism from cover.

e. To remove exhaust valve (if necessary), ease exhaust side bracket off main shaft and exhaust valve (This is achieved by lifting the levers up, away from the bracket feet, and tilting the bracket sideways and up). Remove exhaust valve from lever.

f. Remove seats (and inlet valve) from cover. Note their respective positions in the cover. The DN25 and DN40 valve seats can be identified by a double row of diamond grooves on the exhaust seat and a single row on the inlet seat. The DN50 and DN50 x DN80 valve seats can be distinguished as the inlet valve seat contains a series of holes around each flat, whilst the exhaust valve seat is blank.

g. Visually inspect seating surfaces of inlet and exhaust valves for signs of wear (inlet valve must be removed to check seat). Clean seating areas and re-install or replace if necessary.

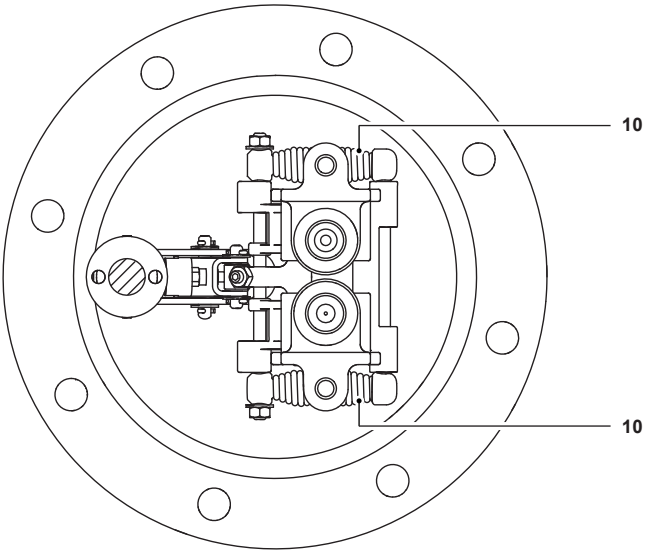

Fig. 13

SHOPVALVES
GLOBAL VALVE SOLUTIONS | 阀门易购

SHOPVALVES
GLOBAL VALVE SOLUTIONS | 阀门易购

5. **To reassemble, reverse the above procedure noting the following:-**

   a. Ensure exhaust and inlet seats (with inlet valve) are placed in correct locations (Step 4f) and tighten torque to 129 - 143 N m (95 - 105 lbf ft).

   b. Exhaust valve assembly - Place spring into body of exhaust valve. Slide valve on to lever whilst holding spring down in bottom of bore. Fit socket set screw and lock-nut to valve.

   c. Torque tighten mechanism retaining screws to 38 - 42 N m (28 - 31 lbf ft).

   d. Replace split pin on inlet valve.

   e. **Reset exhaust valves as follows -** With the valve operating lever against the stop closest to the cover (i.e. exhaust valve in the closed position) and the valve held firmly on its seat, screw in the set screw until it touches the drive pin and then unscrew it 3¾ turns for the DN80 x DN50 and DN50 pumps and 2¾ turns for the DN40 and DN25 pumps. Lock this screw in this position.

6. **Float replacement -** Unscrew the float from the retaining bolt. It will be necessary to remove the float lever shaft to gain access to the hex socket. Reassemble the new float to the lever using a new bolt, washers and Loctite 620 adhesive on the bolt threads. If the lever shaft has been removed, fit new split pins and washers.

7. When reinstalling the cover and mechanism assembly, the cover should be oriented as noted (Step 1) above. Always fit new gaskets. Torque tighten cover bolts to 121-134 N m (89 - 99 lbf ft). Follow the start-up procedure (Section 4, Commissioning) to bring the pump back into operation.

SHOPVALVES
GLOBAL VALVE SOLUTIONS | 阀门易购

SHOPVALVES
GLOBAL VALVE SOLUTIONS | 阀门易购

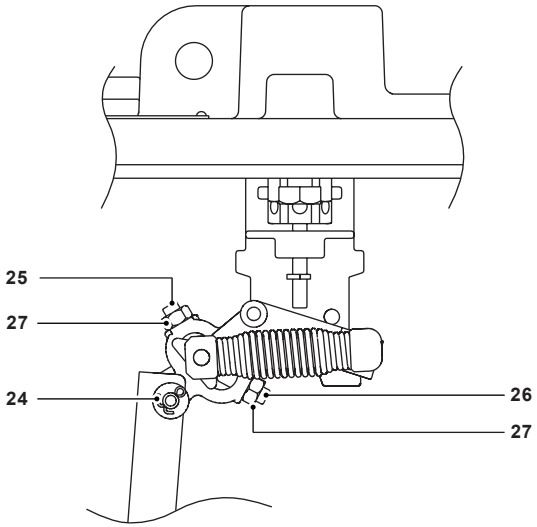

Fig. 14

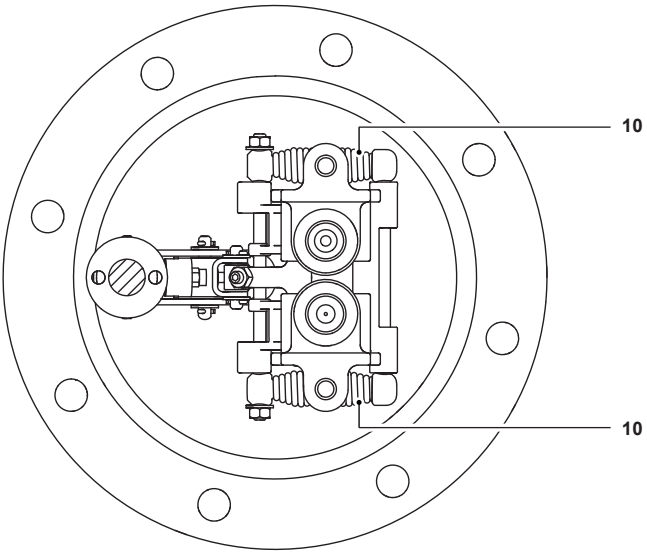

Fig. 15

SHOPVALVES
GLOBAL VALVE SOLUTIONS | 阀门易购

SHOPVALVES
GLOBAL VALVE SOLUTIONS | 阀门易购

7. Spare parts

The spare parts available are detailed below. No other parts are available as spares.

Available spares	
Cover gasket	**2**
Float	**7**
Inlet/outlet check valve (each)	**12**
Cover and internal mechanism assembly (complete)	**1, 2, 7**
Valve set (inlet and exhaust valve and seats)	**16, 17, 18, 19, 20, 21**
Spring and shaft kit	**10**
Mechanism kit (including inlet and exhaust valves and securing screws)	

SHOPVALVES
GLOBAL VALVE SOLUTIONS | 阀门易购

SHOPVALVES
GLOBAL VALVE SOLUTIONS | 阀门易购

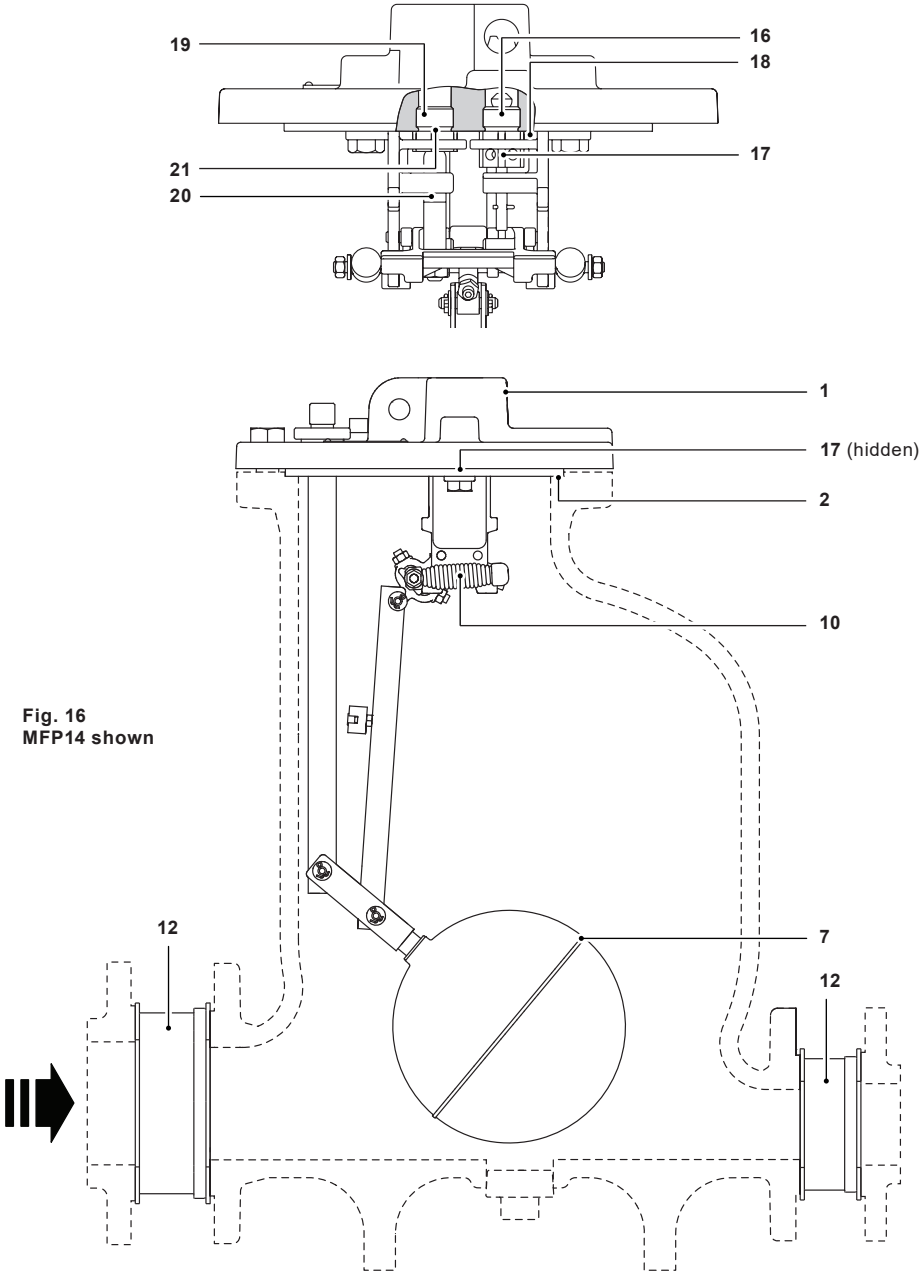

Fig. 16
MFP14 shown

SHOPVALVES
GLOBAL VALVE SOLUTIONS | 阀门易购

SHOPVALVES
GLOBAL VALVE SOLUTIONS | 阀门易购

8. Fault finding

If a correctly sized MFP automatic pump does not operate properly, when fitted to a new installation, an incorrect arrangement can be suspected. For existing installations where the pump operates occasionally or not at all, the cause is often a change in the system supply or backpressure conditions beyond the original design parameters. With the system conditions and problem symptoms determined, check the following in turn and correct as necessary.

Caution:
Installation and troubleshooting should be performed by qualified personnel. Before disconnecting any connections to the pump or piping system, every effort should be made to assure that internal pressure has been relieved and that the motive supply line is isolated to prevent inadvertent discharge of the pump. Consider what media or substance may have been or be within the pump and ascertain what possible hazards or injury may be caused by opening the pump. When disconnecting any connection, piping/bolts should be removed slowly so that if the line is under pressure, this fact will be apparent before completely removing the pipe or component.

Warning:
Always relieve pressure before disconnecting any joint.

SYMPTOM 1	Pump fails to operate on start-up.
Cause 1a	**Motive supply closed.**
Check and cure 1a	Open valves to supply motive pressure to pump.
Cause 1b	**Condensate inlet line closed.**
Check and cure 1b	Open all valves to allow condensate to reach pump.
Cause 1c	**Condensate discharge line closed.**
Check and cure 1c	Open all valves to allow free discharge from pump to destination.
Cause 1d	**Motive pressure insufficient to overcome backpressure.**
Check and cure 1d	Check motive pressure and static backpressure. Adjust motive pressure to 0.6 to 1 bar (8.7 to 14.5 psi) or more higher than static backpressure. It is strongly recommended that the maximum differential pressure is not more than 2 - 4 bar g.
Cause 1e	**Check that the valve(s) are not installed in the wrong direction.**
Check and cure 1e	Verify proper flow direction and correct if required.
Cause 1f	**Restricted vent.**
Check and cure 1f	On vented or closed systems, ensure that the vent line is unrestricted and self-draining to the pump or receiver.

SHOPVALVES
GLOBAL VALVE SOLUTIONS | 阀门易购

SHOPVALVES
GLOBAL VALVE SOLUTIONS | 阀门易购

SYMPTOM 2	Supply line/equipment flooded, but pump appears to cycle normally (periodic audible exhaust observed).
Cause 2a	**Pump undersized.**
Check and cure 2a	Verify rated capacity table (TI-P136-02). Increase check valve size or install additional pump as required.
Cause 2b	**Insufficient filling head.**
Check and cure 2b	Verify required filling head per Section 3, page 12 - Lower pump to achieve required filling head.
Cause 2c	**Insufficient motive pressure to achieve rated capacity.**
Check and cure 2c	Check motive pressure setting and maximum backpressure during operation. Compare to capacity table (TI-P136-02). Increase motive pressure as required to meet load conditions. It is strongly recommended that the maximum differential pressure is not more than 2 - 4 bar g.
Cause 2d	**Restriction in condensate inlet line.**
Check and cure 2d	Verify that full bore fittings are used. Clean the strainer, if fitted. Check that all valves are fully open.
Cause 2e	**Inlet or outlet check valve stuck open (debris).**
Check and cure 2e	Isolate check valve and relieve line pressure. Remove disc check valve and visually inspect the disc and spring. Ensure these are free from debris clean seating surfaces to reinstall or replace if necessary.

SHOPVALVES
GLOBAL VALVE SOLUTIONS | 阀门易购

SHOPVALVES
GLOBAL VALVE SOLUTIONS | 阀门易购

SYMPTOM 3	Supply line/equipment flooded, and pump has stopped cycling (audible periodic exhaust not observed).
Cause 3a	**Discharge line closed or blocked.**
Check and cure 3a	Check motive pressure and static backpressure (at pump discharge). If equal, a closed or blocked discharge line is suspected. Check all valves downstream of pump to ensure an unobstructed discharge.
Cause 3b	**Discharge check valve stuck closed.**
Check and cure 3b	After checking per 3(a), isolate discharge check valve and relieve line pressure. Remove the check valve and visually inspect. Clean seating surfaces and reinstall or replace, if necessary.
Cause 3c	**Insufficient motive pressure.**
Check and cure 3c	If motive pressure is below static backpressure, increase motive pressure setting to 0.6 to 1 bar (8.7 to 14.5 psi) or more above the static backpressure. Do not exceed rated pressure limits of equipment. It is strongly recommended that the maximum differential pressure is not more than 2 - 4 bar g.

For Steps **3(d) to 3(g)** - with exhaust/feedback line isolated from the equipment being drained (close-loop systems), break the exhaust/feedback connection at the pump cover and:-

⚠	**Important safety note:** **For steps (d) through to (g). It is necessary to disconnect the exhaust/ feedback line at the pump exhaust connection. To avoid injury to personnel on closed loop systems care should be exercised to ensure that the pump is isolated (motive supply, condensate inlet and discharge and exhaust feedback line all closed) and that internal pressure is relieved prior to breaking this connection. Also, under fault conditions it is possible that hot condensate may run out of the exhaust connection when disconnected for both closed loop and vented systems. This possibility should be taken into consideration when performing these Steps to avoid scalding personnel. Always wear suitable protective safety clothing/equipment. When dismantling the pump, care should be taken to prevent personal injury from the strong snap action mechanism. Always handle with care.**

Cause 3d	**Motive inlet valve leaking/or worn.**
Check and cure 3d	Slowly open the motive supply line, leaving the condensate inlet and discharge lines closed. Observe the exhaust connection for significant steam or air leakage. If leakage is observed and is not considered to be flash steam, an inlet valve problem is indicated. Isolate pump, remove cover and mechanism assembly and visually inspect. Replace inlet valve and seat assembly.

SHOPVALVES
GLOBAL VALVE SOLUTIONS | 阀门易购

SHOPVALVES
GLOBAL VALVE SOLUTIONS | 阀门易购

SYMPTOM 3 (continued)	Supply line/equipment flooded, and pump has stopped cycling (audible periodic exhaust not observed).
Cause 3e	**Mechanism faults:-** **1.** Broken springs/shaft **2.**Ruptured float **3.** Mechanism binding
Check and cure 3e	With motive line open, slowly open the condensate inlet line to the pump allowing pump to fill and observe exhaust connection. Keep personnel clear of exhaust! If condensate is emitted from the exhaust connection without the pump mechanism tripping a mechanism fault is clearly indicated. Isolate the pump by shutting off motive supply and condensate inlet, remove cover and mechanism assembly, and visually inspect. Examine springs/ mechanism and float for obvious defects. Manually operate the mechanism and check for any source of binding or increased friction. Repair and/or replace all defective parts observed.
Cause 3f	**Exhaust/feedback causing vapour lock (vented or closed loop).**
Check and cure 3f	If the mechanism is heard to trip and no fluid is emitted from the exhaust connection, slowly open the discharge line from the pump and observe operation. Keep personnel clear of exhaust connection. If pump cycles normally, a fault in the exhaust/feedback line is suspected. Recheck the exhaust/feedback piping layout for compliance with the installation instructions. Exhaust/feedback line must be self-draining to prevent vapour locking the pump. Fit thermostatic air vent to balance line on closed loop applications. Ensuring it is higher than the possible flood level of the equipment it is draining.
Cause 3g	**Inlet check valve stuck closed.**
Check and cure 3g	If the mechanism does not trip and fluid does not emit it is suspected that the fault lies in the condensate inlet piping. Ensure that all valves leading to the pump have been opened. If so, this indicates that the inlet check valve is stuck closed or there is insufficient filling head. Isolate the pump and check valve and relieve line pressure: **-** Remove the check valve and visually inspect. **-** Clean seating surfaces and reinstall or replace, if necessary. **-** Reinstall exhaust/feedback connection and open line.
Cause 3h	**Inlet strainer blocked.**
Check and cure 3h	Close isolation valve ahead of strainer. Remove strainer cap and screen. Clean screen or replace if damaged. Insert screen in cap and refit to strainer. Open isolation valve.

SHOPVALVES
GLOBAL VALVE SOLUTIONS | 阀门易购

SHOPVALVES
GLOBAL VALVE SOLUTIONS | 阀门易购

SYMPTOM 4	Clanging or banging in return main after discharges.
Cause 4a	**Vacuum created at pump outlet after discharge because of acceleration/ deceleration of large water slug in return main (usually results from long horizontal run with multiple rises and drops).**
Check and cure 4a	Install a vacuum breaker at the top of the lift (at highest point in return line). For pressurised return systems an air eliminator may be required
Cause 4b	**Pump 'blow-by'.**
Check and cure 4b	Check condensate inlet pressure and static backpressure at the pump discharge. If the inlet pressure equals or exceeds the static backpressure, a 'blow through' problem is suspected. On vented systems, check for leaking traps discharging into the condensate inlet line which would increase inlet line pressure. Replace any faulty traps. On closed loop systems, if condensate inlet pressure can exceed static backpressure under normal operation (i.e. boost in equipment operating pressure via a modulating control valve or significant decrease in static return main pressure), a pump/trap combination is required. The pump/trap combination will prevent passage of steam into the return main and allow the pump to cycle normally when condensate is present (See Fig. 7, page 19).
Cause 4c	**Differential pressure too high. If the steam motive pressure vastly exceeds the required pressure to overcome the backpressure acting against the pump, the temperature of the pumped condensate will be at a greatly elevated temperature to the condensate in the return line. The flash steam caused by the higher temperature pumped condensate will collapse when it comes into contact with the cooler condensate in the return line, causing an audible banging.**
Check and cure 4c	It is strongly recommended that the steam motive supply pressure does not exceed the total possible backpressure by more than 2 - 4 bar g. A motive supply taken from higher pressure steam lines should be reduced by a suitable pressure reducing valve.

SHOPVALVES
GLOBAL VALVE SOLUTIONS | 阀门易购

SHOPVALVES
GLOBAL VALVE SOLUTIONS | 阀门易购

SYMPTOM 5	Vent line discharging excessive flash steam (vented applications only).
Cause 5a	**Faulty steam traps discharging live steam into condensate inlet line (see also 4(b), Pump 'blow-by').**
Check and cure 5a	Check for leaking traps discharging into condensate return. Repair or replace faulty traps.
Cause 5b	**Excessive (over 20 kg/h or 45 lb/h) flash steam being vented through pump.**
Check and cure 5b	Vent receiver or reservoir piping ahead of pump.
Cause 5c	**Exhaust valve stuck or worn.**
Check and cure 5c	Isolate pump and remove cover and mechanism assembly. Remove exhaust valve and seat assembly. Visually inspect seating surface Clean and reinstall or replace, if worn.

SHOPVALVES
GLOBAL VALVE SOLUTIONS | 阀门易购

SHOPVALVES
GLOBAL VALVE SOLUTIONS | 阀门易购

SHOPVALVES
GLOBAL VALVE SOLUTIONS | 阀门易购

SHOPVALVES
GLOBAL VALVE SOLUTIONS | 阀门易购

SHOPVALVES
GLOBAL VALVE SOLUTIONS | 阀门易购

SHOPVALVES
GLOBAL VALVE SOLUTIONS | 阀门易购

SHOPVALVES
GLOBAL VALVE SOLUTIONS | 阀门易购