SHOPVALVES
GLOBAL VALVE SOLUTIONS | 阀门易购

3579049/21

IM-P357-29
CTLS Issue 21

spirax sarco

PN9000 Series
Pneumatic Actuators

Installation and Maintenance Instructions

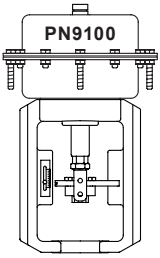

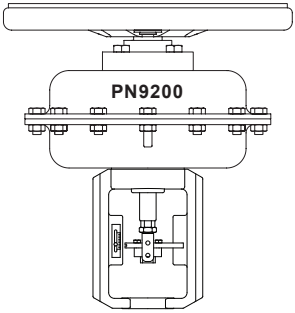

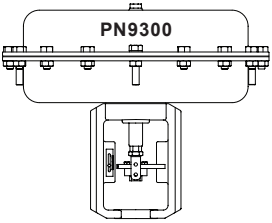

1. Safety information
2. General product information
3. Installation
4. Commissioning
5. Maintenance
6. Spare parts

© Copyright 2026

Printed in France

SHOPVALVES
GLOBAL VALVE SOLUTIONS | 阀门易购

SHOPVALVES
GLOBAL VALVE SOLUTIONS | 阀门易购

1. Safety information

Safe operation of these products can only be guaranteed if they are properly installed, commissioned, used and maintained by qualified personnel (see Section 1.11) in compliance with the operating instructions. General installation and safety instructions for pipeline and plant construction, as well as the proper use of tools and safety equipment must also be complied with.

1.1 Intended use

Referring to the Installation and Maintenance Instructions, name-plate and Technical Information Sheet, check that the product is suitable for the intended use / application. Please note that these products are out of the scope of the European Pressure Equipment Directive 2014/68/EU.

i) The products have been specifically designed for use on compressed air, which is in Group 2 of the above mentioned Pressure Equipment Directive.

ii) Check material suitability, pressure and temperature and their maximum and minimum values. If the maximum operating limits of the product are lower than those of the system in which it is being fitted, or if malfunction of the product could result in a dangerous overpressure or overtemperature occurrence, ensure a safety device is included in the system to prevent such over-limit situations.

iii) Determine the correct installation situation and direction of fluid flow.

iv) Spirax Sarco products are not intended to withstand external stresses that may be induced by any system to which they are fitted. It is the responsibility of the installer to consider these stresses and take adequate precautions to minimise them.

v) Remove protection covers from all connections and protective film from all name-plates, where appropriate, before installation on steam or other high temperature applications.

1.2 Access

Ensure safe access and if necessary a safe working platform (suitably guarded) before attempting to work on the product. Arrange suitable lifting gear if required.

1.3 Lighting

Ensure adequate lighting, particularly where detailed or intricate work is required.

1.4 Hazardous liquids or gases in the pipeline

Consider what is in the pipeline or what may have been in the pipeline at some previous time. Consider: flammable materials, substances hazardous to health, extremes of temperature.

1.5 Hazardous environment around the product

The PN9000 series is classified as out of scope of ATEX (Directive 2014/34/EU). A risk assessment of the product concludes that the PN9000 series is unable to create a spark even in the unlikely incident of an accident or fault. However, when used in explosive atmospheres, all electro-mechanical accessories including positioners and limit switches must be correctly selected and certified in order to provide safe operation within the requirements of the environment.
When performing maintenance operations you must consider : explosion risk areas, lack of oxygen (e.g. tanks, pits), dangerous gases, extremes of temperature, hot surfaces, fire hazard (e.g. during welding), excessive noise, moving machinery.

SHOPVALVES
GLOBAL VALVE SOLUTIONS | 阀门易购

SHOPVALVES
GLOBAL VALVE SOLUTIONS | 阀门易购

1.6 The system

Consider the effect on the complete system of the work proposed. Will any proposed action (e.g. closing isolation valves, electrical isolation) put any other part of the system or any personnel at risk?
Dangers might include isolation of vents or protective devices or the rendering ineffective of controls or alarms. Ensure isolation valves are turned on and off in a gradual way to avoid system shocks.

1.7 Pressure systems

Ensure that any pressure is isolated and safely vented to atmospheric pressure. Consider double isolation (double block and bleed) and the locking or labelling of closed valves. Do not assume that the system has depressurised even when the pressure gauge indicates zero.

1.8 Temperature

Allow time for temperature to normalise after isolation to avoid danger of burns. The actuator must not be insulated. When coupled to a valve operating on high temperature media, if there is a risk of burning through handling (intentional or accidental), it is recommended that suitable methods of prevention are implemented e.g. machine or a visual warning.

1.9 Tools and consumables

Before starting work ensure that you have suitable tools and / or consumables available. Use only genuine Spirax Sarco replacement parts.

1.10 Protective clothing

Consider whether you and / or others in the vicinity require any protective clothing to protect against the hazards of, for example, chemicals, high / low temperature, radiation, noise, falling objects, and dangers to eyes and face.

1.11 Permits to work

All work must be carried out or be supervised by a suitably competent person. Installation and operating personnel should be trained in the correct use of the product according to the Installation and Maintenance Instructions.
Where a formal 'permit to work' system is in force it must be complied with. Where there is no such system, it is recommended that a responsible person should know what work is going on and, where necessary, arrange to have an assistant whose primary responsibility is safety.
Post 'warning notices' if necessary.

1.12 Handling

Manual handling of large and / or heavy products may present a risk of injury. Lifting, pushing, pulling, carrying or supporting a load by bodily force can cause injury particularly to the back. You are advised to assess the risks taking into account the task, the individual, the load and the working environment and use the appropriate handling method depending on the circumstances of the work being done.

SHOPVALVES
GLOBAL VALVE SOLUTIONS | 阀门易购

SHOPVALVES
GLOBAL VALVE SOLUTIONS | 阀门易购

1.13 Safe lifting practice

Never use the actuator to lift a valve. It is recommended to lift the complete valve assembly using the correct equipment(s) and techniques so as not to cause damage or injury. Valves should be supported under the inlet and outlet connections, not the actuator (including hand wheel or accessories), and careful attention should be made to prevent the valve from rotating during the lift sequence. When installed, the neither the valve or its accessories should be used as a hand hold or step for access to other parts of the plant.

1.14 Residual hazards

In some cases the product is provided with pre-compressed springs. Any operation to open the spring housing is to be carried out strictly following the correct procedure given in the Installation and Maintenance Instructions.

1.15 Freezing

Provision must be made to protect products which are not self-draining against frost damage in environments where they may be exposed to temperatures below freezing point.

1.16 Disposal

This product is recyclable and no ecological hazard is anticipated with its disposal providing due care is taken, however the following list of exception will require individual disposal in line with local health and safety regulations:

- PTFE
- Viton 'O' rings
- Nitrile
- Reinforced NBR
- EPDM
- FKM

REACH. Should any substances of very high concern be found within a product, details of the location will be identified within installation and maintenance instructions Section 2.4 : Materials. Further information about product compliance is be available at www.spiraxsarco.com/product-compliance

1.17 Returning products

Customers and stockists are reminded that under EC Health, Safety and Environment Law, when returning products to Spirax Sarco they must provide information on any hazards and the precautions to be taken due to contamination residues or mechanical damage which may present a health, safety or environmental risk. This information must be provided in writing including Health and Safety data sheets relating to any substances identified as hazardous or potentially hazardous.

SHOPVALVES
GLOBAL VALVE SOLUTIONS | 阀门易购

SHOPVALVES
GLOBAL VALVE SOLUTIONS | 阀门易购

1.18 Responsibilities of the operator and operating (including maintenance) personnel.

The operator is responsible for ensuring that safe systems of operation and practice are implemented and maintained. Only competent persons must be allowed to be able to operate and maintain these devices, and these persons must be familiar with, and comply with the applicable health and safety standards or guidelines.
The installation and maintenance instructions should form part of the standard operating procedures for maintenance and must therefore be kept in an accessible location and in a legible condition.
Product identification and safety related labels must also be kept in a clean and legible condition.
Identification and safety labels must be replaced if they become damaged or obscured in operation.

SHOPVALVES
GLOBAL VALVE SOLUTIONS | 阀门易购

SHOPVALVES
GLOBAL VALVE SOLUTIONS | 阀门易购

2. General product information

2.1 General information

The PN9000 series actuators are a compact range of linear actuators that are available in four sizes. This range of actuators comprise of four diaphragm sizes for matching the requirements of valves at various differential pressures.
Each actuator has a mechanical travel indicator fitted and incorporates a fully-rolling diaphragm, which provides good linearity over the operating stroke.

Available options

PN	= Standard	**Suffix E**	=	Spring-extend
		Suffix R	=	Spring-retract

Optional extra

Manual handwheel	**Suffix H**
High Temperature	**Suffix T**

Important note: Throughout this document, reference has been made to a PN actuator.
With exception of some component materials all actuators are identical.

2.2 Technical data

Temperature range	**Reinforced NBR Diaphragm**	- 20 °C to +110 °C
	EPDM (T version)	-20 °C to +130 °C
Maximum operating inlet pressure	**PN9100**	6 bar g
	PN9220E/PN9230E	3 bar g
	PN9226E/PN9236E	4 bar g
	PN9223E/PN9233E and PN9200R	6 bar g
	PN9320E/PN9330E	2 bar g
	PN9337E	4 bar g
	PN9300R	2.7 bar g
Air supply connection		¼" NPT
Actuator travel	**PN9100**	20 mm
	PN922_ and PN932_	20 mm
	PN923_ and PN933_	30 mm
Reinforced NBR diaphragm		

SHOPVALVES
GLOBAL VALVE SOLUTIONS | 阀门易购

SHOPVALVES
GLOBAL VALVE SOLUTIONS | 阀门易购

2.3 Spring ranges

Actuator types	Spring range	Travel
PN9120	0.2 to 1.0 bar	20 mm
PN9120	0.4 to 1.2 bar	20 mm
PN9126	1.0 to 2.0 bar	20 mm
PN9123	2.0 to 4.0 bar	20 mm
PN9220	0.2 to 1.0 bar	20 mm
PN9230	0.4 to 1.2 bar	30 mm
PN9220	0.4 to 1.2 bar	20 mm
PN9226	1.0 to 2.0 bar	20 mm
PN9223	2.0 to 4.0 bar	20 mm
PN9233	0.4 to 1.2 bar	30 mm
PN9236	1.0 to 2.0 bar	30 mm
PN9320	0.2 to 1.0 bar	20 mm
PN9320	0.4 to 1.2 bar	20 mm
PN9330	0.4 to 1.2 bar	30 mm
PN9337	2.5 to 3.5 bar	30 mm

SHOPVALVES
GLOBAL VALVE SOLUTIONS | 阀门易购

SHOPVALVES
GLOBAL VALVE SOLUTIONS | 阀门易购

2.4 Materials - PN9100, PN9200 and PN9300

No.	Part		Material	
1	Yoke		SG iron	
2	Upper diaphragm housing		Carbon steel	
3	Diaphragm plate		Aluminium	
4	Diaphragm		Reinforced NBR (EPDM for T version)	
5	Spring		Spring steel	
6	Spindle		Stainless steel	
7	Washer		Carbon steel (Zn. plated)	
8	Spacer		Carbon steel (Zn. plated)	
9	'O' ring		Viton	
10	Setting Screw		Stainless steel	BS 970 431 S29
11	Adaptor		Stainless steel	BS 970 431 S29
13	Anti-rotation/Indicator plate		Stainless steel	
15	Scale		Stainless steel	
16	Vent plug		PELD	
17	Bearing		PTFE / steel composite	
18	Seal		Polyurethane (FKM for T version)	
19 20	Pan head screw Nyloc nut	PN9000	Stainless steel	A2 - 70
21	Bolt		Carbon steel (Zn. plated)	Gr. 8.8
22 23 24	Hex. head screw (short) Hex. head screw (long) Nut	PN9000	Carbon Steel (Zn. + AL. plated)	Gr. 8.8
25	Lock-nut		Stainless steel	A2 - 70
26	Socket head screw	PN9000	Stainless steel	A2 - 70
28	Washer		Carbon steel (Zn. plated)	
29	Hex. head screw		Carbon steel (Zn. plated)	Gr. 8.8 (Gr. 10.9 for PN9300R)
30	Gasket		Reinforced graphite	
31	Lower diaphragm housing		Carbon steel	
32	Thrust plate	PN9300R	Carbon steel	

SHOPVALVES
GLOBAL VALVE SOLUTIONS | 阀门易购

SHOPVALVES
GLOBAL VALVE SOLUTIONS | 阀门易购

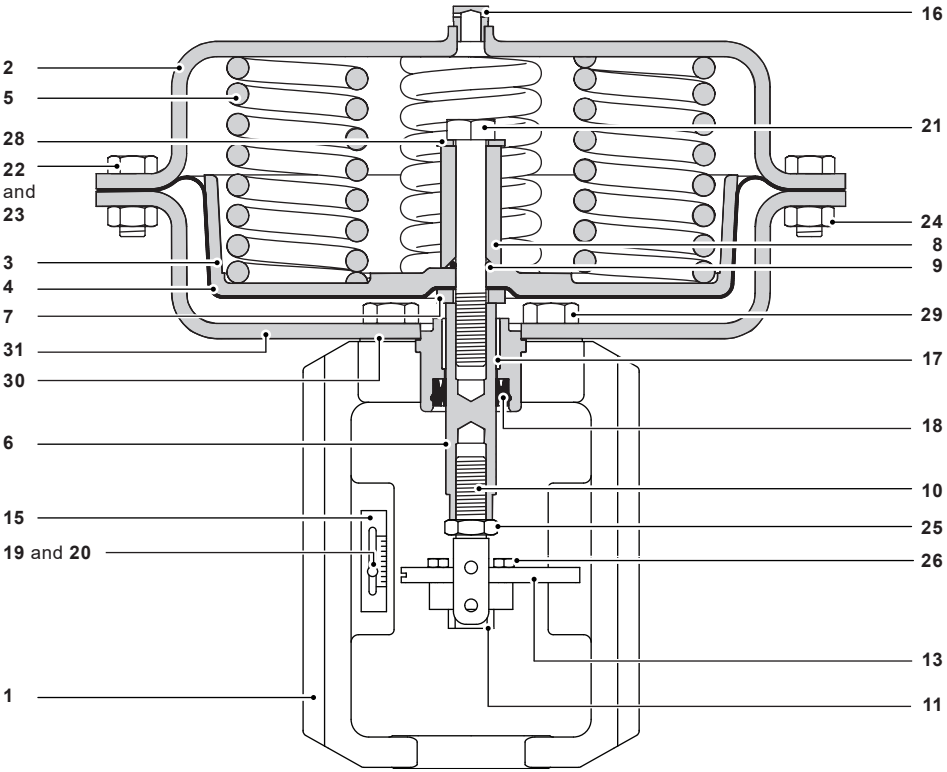

Fig. 1 PN9200E

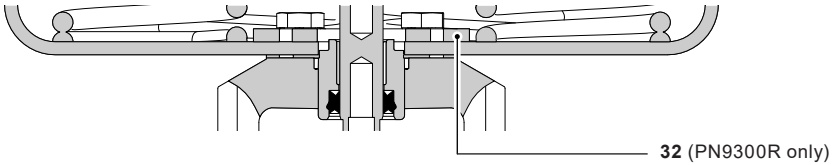

SHOPVALVES
GLOBAL VALVE SOLUTIONS | 阀门易购

SHOPVALVES
GLOBAL VALVE SOLUTIONS | 阀门易购

3. Installation

3.1 Installation Safety Information

Warning
Before commencement of any work to inspect, install, commission, remove or modify the PN9000 actuator, please read Section 1 "Safety Information".

Warning
Lifting and fitting or actuators increases the risk of personal injury

Crush hazard
When actuators are to be fitted using lifting equipment ALWAYS ensure that the actuator is carefully slung in order that it cannot fall. NEVER attempt to remove a control valve from the line by using the actuator as the lifting point. The actuator or the lifting equipment could become damaged.

Never stand under components that are being lifted. Head safety protection must always be worn when operating on or close to equipment where lifting operations are taking place.

Muscular skeletal damage
For small actuators that do not require mechanical lifting aids, always ensure that manual lifting best practice is observed. Always use two personnel where possible and ensure that proper access is available in order to ensure a secure foothold.

See separate Installation and Maintenance Instructions for the control valve. For details of differential pressures associated with the Spira-trol™ valves refer to the relevant actuator Technical Information (TI) Sheet.

The actuators should be installed in such a position as to allow full access to both actuator and valve for maintenance purposes. The preferred mounting position is with the actuator and valve spindle in the vertical position above or below the horizontal pipework. The air supply to the actuator must be 'dry and free from oil'. For high temperature conditions, insulate the control valve and pipework to protect the actuator.

Note: If the actuator is to be fitted onto an older style valve, an adaptor ring will be required. Contact Spirax Sarco for further information.

Actuator housing
The actuator housing must only be pressurized on the opposite side of the diaphragm holding the springs. The housing vent cap must be left unrestricted.

SHOPVALVES
GLOBAL VALVE SOLUTIONS | 阀门易购

SHOPVALVES
GLOBAL VALVE SOLUTIONS | 阀门易购

Risk of injury by moving parts

The use of compressed air to assist the installation, commissioning and maintenance of pneumatic actuators increases the risk of personal injury.

Crush hazard

DO NOT place hands within the actuator yoke or on the stem when isolation of the pneumatic supply has been removed.

DO NOT attempt to restrict actuator stroke or movement, or increase seat load through the placing of objects within the actuator yoke. This practice could also result in the LOSS OF SIGHT.

Loss of sight

Compressed air venting from the actuator (or accessories) could easily cause permanent damage to the eyes. Safety eye protection must always be worn when operating on or near such equipment.

Loss of hearing

Compressed air venting from the actuator (or accessories) could cause temporary or permanent loss of hearing. Ear safety defenders must always be worn when operating on or near such equipment.

SHOPVALVES
GLOBAL VALVE SOLUTIONS | 阀门易购

SHOPVALVES
GLOBAL VALVE SOLUTIONS | 阀门易购

3.2 Fitting the PN9100E, PN9200E or PN9300E actuator to a valve

- Place the anti-rotation/indicator plate (**13**) onto setting screw (**10**) and screw lock nut (**25**) onto setting screw (**10**).
- Fully screw setting screw (**10**) into actuator spindle (**6**) (pay attention to locate anti-rotation/indicator plate into the yoke ribs.
- Apply the control signal pressure required to bring the spindle to mid-travel position (Figure 4). Place the actuator yoke over the valve spindle and locate it onto the bonnet shoulder. Hand tighten the mounting nut.
- Fit the valve adaptor (**11**) onto the valve spindle then manually push the valve plug to its closed position.

Note: Two female threads must be visible inside the adaptor when fitted to the valve spindle, make sure the 2 M5 thread of the connector (**11**) is aligned with the inlet and outlet.

- Apply the setting pressure to the bottom of the actuator, and then adjust the setting screw (**10**) so that it touches the valve adaptor (**11**), then tighten the lock-nut (**25**).

Type	Minimum setting pressure bar g	Maximum setting pressure bar g
PN9120 0,2-1,0	0.2	0.3
PN9120 0,4-1,2	0.4	0.5
PN9126	1	1.1
PN9123	1.95	2.1
PN9220 0,2-1,0	0.2	0.3
PN9220 0,4-1,2	0.4	0.5
PN9226	0.95	1.1
PN9223	1.9	2.1
PN9230 0,2-1,0	0.2	0.3
PN9230 0,4-1,2	0.4	0.5
PN9236	0.95	1.1
PN9233	1.9	2
PN9320 0,2-1,0	0.2	0.3
PN9320 0,4-1,2	0.4	0.5
PN9330 0,2-1,0	0.2	0.3
PN9330 0,4-1,2	0.4	0.5
PN9337	2.3	2.5

- Carefully release the control air signal.
- Fully screw the locking screws (**26**) 6 Nm +/-1 Nm.
- Check travel is correct. If reduced travel is observed, redo the full setting, apply minimum setting pressure from the setting table and reset the setting screw (**10**).

SHOPVALVES
GLOBAL VALVE SOLUTIONS | 阀门易购

SHOPVALVES
GLOBAL VALVE SOLUTIONS | 阀门易购

- Operate the actuator and valve over its full travel four times to ensure alignment.
- Apply 50% control air signal to lift the plug off the seat and tighten the actuator clamping nut to the recommended torque:

  For the **M34** nut: 70 Nm (52 lbf ft) and 80 Nm (59 lbf ft) for the stainless steel valve.

  For the **M50** nut: 100 Nm (74 lbf ft)
- With the valve plug still off the seat tighten the lock-nut to the recommended torque:

  For the **M8** stem: 10 Nm (7.5 lbf ft)

  For the **M12** stem: 20 Nm (15 lbf ft)

Caution: Risk of actuator damage.
Always lock the actuator stem with a second spanner in order not to damage the diaphragm.

Caution: Risk of actuator damage.
Always observe the specified torques. Application of excessive or insufficient torque could lead to reduced life expectancy of the product or possible product failure.

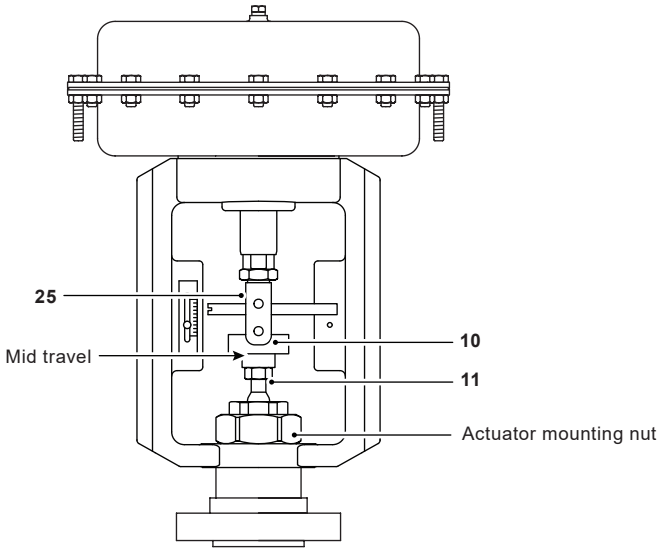

Fig. 4

SHOPVALVES
GLOBAL VALVE SOLUTIONS | 阀门易购

SHOPVALVES
GLOBAL VALVE SOLUTIONS | 阀门易购

4. Commissioning

4.1 Commissioning Safety Information'

Warning
Before commencement of any work to inspect, install, commission, remove or modify the PN9000 actuator, please read Section 1 "Safety Information".

Warning: Risk of overpressure
During commissioning, it is important to ensure that the Maximum Allowable Working Pressure of the device is not exceeded. Always ensure that any pneumatic supply pressure is correctly regulated and that the pressure gauges are both accurate and legible. ALWAYS increase the pneumatic supply pressure slowly in order to reduce the risk of overpressure and unnecessary accident.

Warning: Risk of injury by moving parts
The use of compressed air to assist the installation, commissioning and maintenance of pneumatic actuators increases the risk of personal injury.

Warning: Crush hazard
DO NOT place hands within the actuator yoke or on the stem when isolation of the pneumatic supply has been removed.

DO NOT attempt to restrict actuator stroke or movement, or increase seat load through the placing of objects within the actuator yoke. This practice could also result in the LOSS OF SIGHT.

Warning: Loss of sight
compressed air venting from the actuator (or accessories) could easily cause permanent damage to the eyes. Safety eye protection must always be worn when operating on or near such equipment.

Warning: Loss of hearing
compressed air venting from the actuator (or accessories) could cause temporary or permanent loss of hearing. Ear safety defenders must always be worn when operating on or near such equipment.

Note: If the actuator / valve has been supplied with a positioner, reference should be made to the separate Installation and Maintenance Instructions supplied with the product.

SHOPVALVES
GLOBAL VALVE SOLUTIONS | 阀门易购

SHOPVALVES
GLOBAL VALVE SOLUTIONS | 阀门易购

4.2 Adjusting the spring

The actuator spring range will be indicated on the name-plate. Should it be necessary to check or adjust the lift-off-pressure the procedure is described in Sections 4.2.1 and 4.2.2.

4.2.1 PN9100E, PN9200E or PN9300E spring-extend actuators only

Note: Adjustment of the spring will only alter the pressure of the control signal air at which the valve commences to move off its seat (set point) and will not alter the spring pressure range required to move the valve through its full travel. i.e. 0.2 to 1.0 bar spring (range 0.8 bar) set to commence to lift at 0.4 bar will require a 1.2 bar air pressure (0.4 + 0.8) to obtain valve full travel.

To adjust set point, refer to Figure 5 and proceed as follows:

- Ensure the control valve has been isolated and the actuator housing is pressure free.
- Loosen and remove the M5 screws (**26**), see Figure 6) and remove the valve adaptor (**11**).
- Using two spanners whilst holding the actuator spindle (**6**) loosen the adaptor lock-nut (**25**).
- Apply the control signal pressure required to commence the lifting of the actuator spindle.
- With the valve plug remaining on its seat adjust the setting screw (**10**) until it presses tightly against the valve adaptor (**11**). Tighten the lock-nut (**25**). See Figure 5 for correct installation.

Note:
Two female threads must be visible inside the adaptor when fitted to the valve spindle.

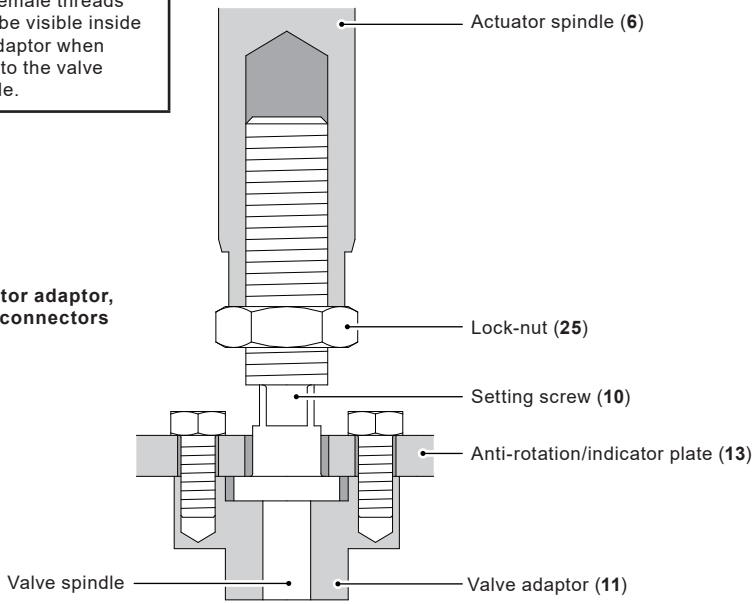

Fig. 5
Assembly of actuator adaptor, valve adaptor and connectors

SHOPVALVES
GLOBAL VALVE SOLUTIONS | 阀门易购

SHOPVALVES
GLOBAL VALVE SOLUTIONS | 阀门易购

- Carefully release the control air signal.
- Fit the locking screws (**26**) torque to 6 Nm +/-1 Nm
- Operate the actuator and valve over its full travel four times to ensure alignment.
- With the valve plug still off the seat tighten the lock-nut to the recommended torque: 20 Nm (15 lbf ft)
- Check that the valve lifts at the minimum spring range (+0.1 bar) and check that the valve is fully closed with the minimum control signal pressure.
- After the test check the position of the travel indicator against the 'arrow' of the connector and adjust its position accordingly.

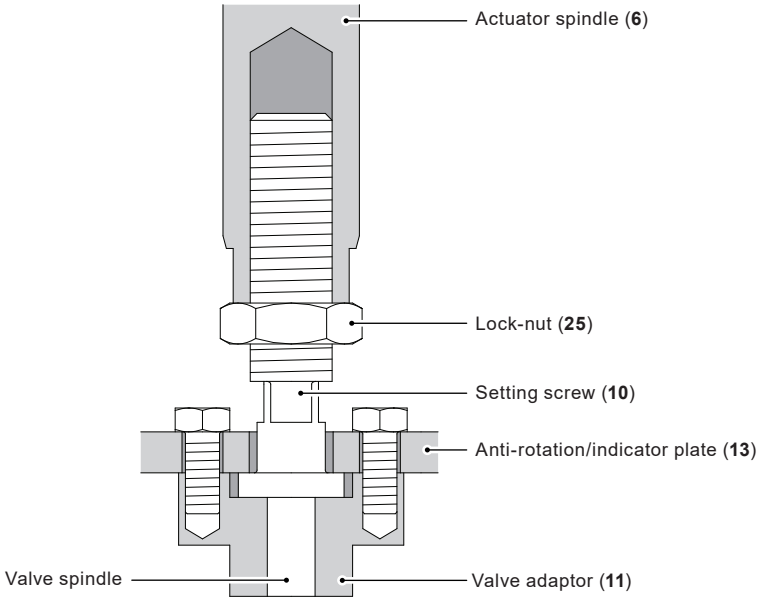

Fig. 5 Assembly of actuator adaptor, valve adaptor and connectors

Note: To prevent damage to the valve seat, please ensure the plug does not turn while pressing on the seat during assembling or adjustment.

Note: To prevent damage to the diaphragm, ensure the actuator spindle (6) is not allowed to rotate when the diaphragm is assembled within its housing.

SHOPVALVES
GLOBAL VALVE SOLUTIONS | 阀门易购

SHOPVALVES
GLOBAL VALVE SOLUTIONS | 阀门易购

4.2.2 PN9100R, PN9200R or PN9300R spring-retract actuators only

Warning
Before commencing any work please refer to Section 4.0 Safety Information.

Note: Adjustment of the spring will only alter the pressure of the control signal air at which the valve commences to move (set point) and will not alter the spring pressure range required to move the valve through its full travel. i.e. 0.2 to 1.0 bar spring (range 0.8 bar) set to commence to lift at 0.4 bar will require a 1.2 bar air pressure (0.4 + 0.8) to obtain valve full travel.

To adjust the set point refer to Figure 6 and proceed as follows:

- Ensure the control valve has been isolated and the actuator housing is pressure free.
- Loosen and remove the screws (**26**) and remove the valve adaptor (**11**).
- Using two spanners whilst holding the actuator spindle (**6**) loosen the actuator connector lock-nut (**25**).
- Apply the control signal pressure required to complete the full travel of the actuator spindle.
- With the valve plug remaining on its seat adjust the valve adaptor (**11**) until it presses tightly against the setting screw (**10**). See Figure 6 for correct installation.

Note: Two female threads must be visible inside the adaptor when fitted to the valve spindle.

- Fit the locking screws (**26**) Torque 6 Nm +/-1 Nm.
- Operate the actuator and valve over its full travel four times to ensure alignment.
- With the valve plug still off the seat tighten the lock-nut to the recommended torque:
  20 Nm (15 lbf ft)
- Check that the valve commences travel at the minimum spring range (+0.1 bar) and check that the valve is fully closed with the maximum control signal pressure applied.
- Carefully release the control air pressure.
- After the test check the position of the travel indicator against the 'arrow' of the connector and adjust its position accordingly.

SHOPVALVES
GLOBAL VALVE SOLUTIONS | 阀门易购

SHOPVALVES
GLOBAL VALVE SOLUTIONS | 阀门易购

Note: To prevent damage to the valve seat, please ensure the plug does not turn while pressing on the seat during assembling or adjustment.

Note: To prevent damage to the diaphragm, ensure the actuator spindle (**6**) is not allowed to rotate when the diaphragm is assembled within its housing.

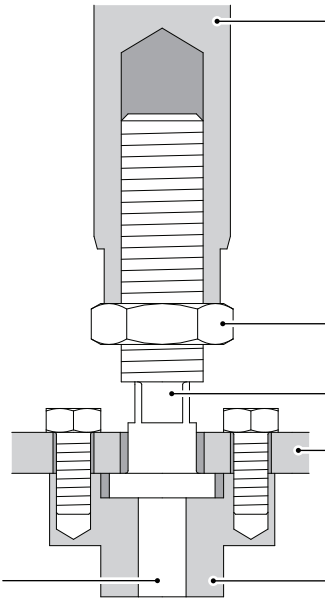

Fig. 6 Assembly of actuator adaptor, valve adaptor and connectors

SHOPVALVES
GLOBAL VALVE SOLUTIONS | 阀门易购

SHOPVALVES
GLOBAL VALVE SOLUTIONS | 阀门易购

5. Maintenance

5.1 Maintenance Safety Information

Warning
Before commencement of any work to inspect, install, commission, remove or modify the PN9000 actuator, please read Section 1 "Safety Information".

The PN9000 series pneumatic actuators (and variants) are maintenance free. To ensure satisfactory operation it is strongly recommended that the control signal air is filtered and supplied dry and free of oil. Should it be necessary to replace spare parts the following procedure should be used.

Caution: Always read the Safety Information Sections of the relevant Installation and Maintenance Instructions for the control valve and any accessories as well as the actuator before commencing any work.

Warning
Always ensure that the control valve is isolated and all necessary risk assessments and method statements have been validated and authorized prior to commencing maintenance operations.

Warning: Risk of injury by moving parts
The use of compressed air to assist the installation, commissioning and maintenance of pneumatic actuators increases the risk of personal injury.

Warning: Crush hazard
DO NOT place hands within the actuator yoke or on the stem when isolation of the pneumatic supply has been removed.

DO NOT attempt to restrict actuator stroke or movement, or increase seat load through the placing of objects within the actuator yoke. This practice could also result in the LOSS OF SIGHT.

Danger
Lifting and fitting or actuators increases the risk of personal injury

Warning: Crush hazard
When actuators are to be fitted using lifting equipment ALWAYS ensure that the actuator is carefully slung in order that it cannot fall. NEVER attempt to remove a control valve from the line by using the actuator as the lifting point. The actuator or the lifting equipment could become damaged.

Never stand under components that are being lifted. Head safety protection must always be worn when operating on or close to equipment where lifting operations are taking place.

Warning: Muscular skeletal damage
For small actuators that do not require mechanical lifting aids, always ensure that manual lifting best practice is observed. Always use two personnel where possible and ensure that proper access is available in order to ensure a secure foothold.

Warning
The diaphragm housing contains powerful springs under compression.
Exercise great care when dismantling.

SHOPVALVES
GLOBAL VALVE SOLUTIONS | 阀门易购

SHOPVALVES
GLOBAL VALVE SOLUTIONS | 阀门易购

5.2 Removing the actuator from the valve:

- Drive the actuator into approximately mid-travel position with the air supply.
- Loosen and remove the screws (**26**) and remove the valve adaptor (**11**).
- Loosen and remove the actuator mounting nut (see Figure 7) and lift the actuator off the valve.
- Reduce the air supply pressure until the housing is pressure free. Isolate and disconnect the air supply from the actuator.

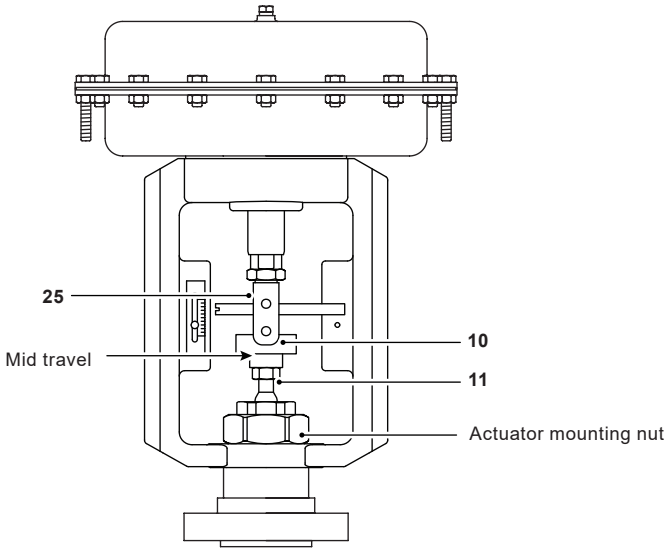

Fig. 7

SHOPVALVES
GLOBAL VALVE SOLUTIONS | 阀门易购

SHOPVALVES
GLOBAL VALVE SOLUTIONS | 阀门易购

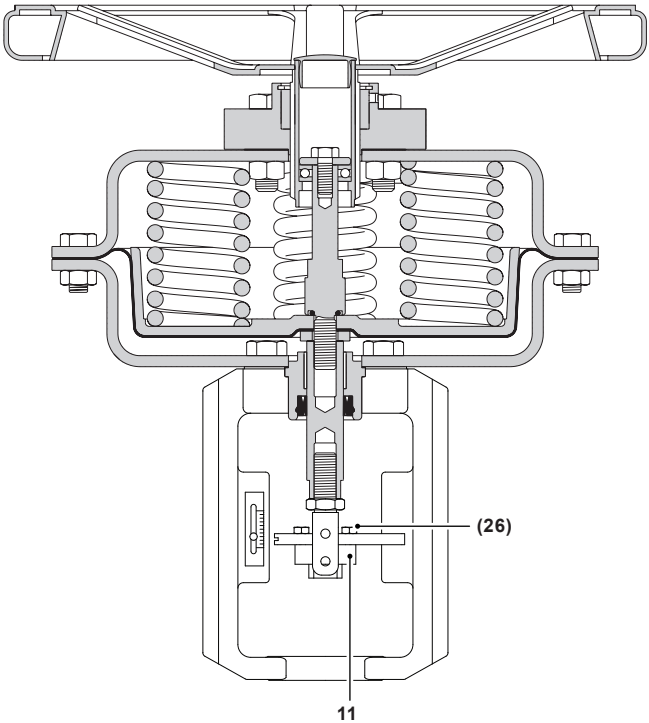

Fig. 8

SHOPVALVES
GLOBAL VALVE SOLUTIONS | 阀门易购

SHOPVALVES
GLOBAL VALVE SOLUTIONS | 阀门易购

5.3 PN9000E spring-extend

5.3.1 Diaphragm kit - How to fit

Warning
Before commencing any work please refer to Section 5 Safety Information - Maintenance.

- Remove the actuator from the valve as described in Section 5.2.

Warning
There are 3 off longer housing screws (23) which are fitted to safely allow spring decompression. These MUST be removed last after all other screws are removed and should be loosened evenly to prevent damage to the actuator or valve and to prevent uncontrollable and rapid decompression of the spring preload.

- Lubricate the threads of the three long hex. head screws with a PTFE based grease before releasing the tension in the springs.
- Loosen and remove the short housing screws and nuts (22, 23 and 24).
- Holding each nut with a spanner, rotate the three long hex. head screws a few turns at a time. Remove the screws and upper housing (2).
- Remove the springs (5). Using a spanner to hold the actuator spindle (6), loosen the bolt (21). Remove spacer (8), 'O' ring (9), washer (28), diaphragm plate (3) and finally the diaphragm (4).
- Refit the new diaphragm (4) and reassemble all items in reverse order, taking care not to damage the 'O' ring. It is recommended that Loctite 243 be applied to the upper thread of the spindle (6) prior to tightening. Using two spanners, whilst holding the actuator spindle (6) tighten the bolt (21). Refer to Table 1, for the recommended tightening torques.
- Refit the top housing (2) and securing the nuts and screws (22, 23 and 24). Refer to Section 5.5 if a handwheel is fitted.

Note: Supporting the actuator spindle (**6**) ensures that the diaphragm sits evenly in the lower housing. Tighten the housing screws evenly to avoid distortion. 3 off longer housing screws (**23**) are provided on some spring ranges to cater for longer springs. If supplied, these should be positioned 120° apart and tightened evenly prior to fitting the remaining screws.

To avoid distortion of the diaphragm do not fully tighten housing screws until all screws have been fitted. Final tightening should then be carried out.

SHOPVALVES
GLOBAL VALVE SOLUTIONS | 阀门易购

SHOPVALVES
GLOBAL VALVE SOLUTIONS | 阀门易购

Table 1 Recommended tightening torques

Actuator series	Screws and nuts (Items 22, 23 and 24)			Bolt (Item 21)		
	Size	Torque		Size	Torque	
		N m	lbf ft		N m	lbf ft
PN9100	M6	12	8.9	M12	50	36.9
PN9200	M10	35	26.0	M12		
PN9300	M10	35	26.0	M12		

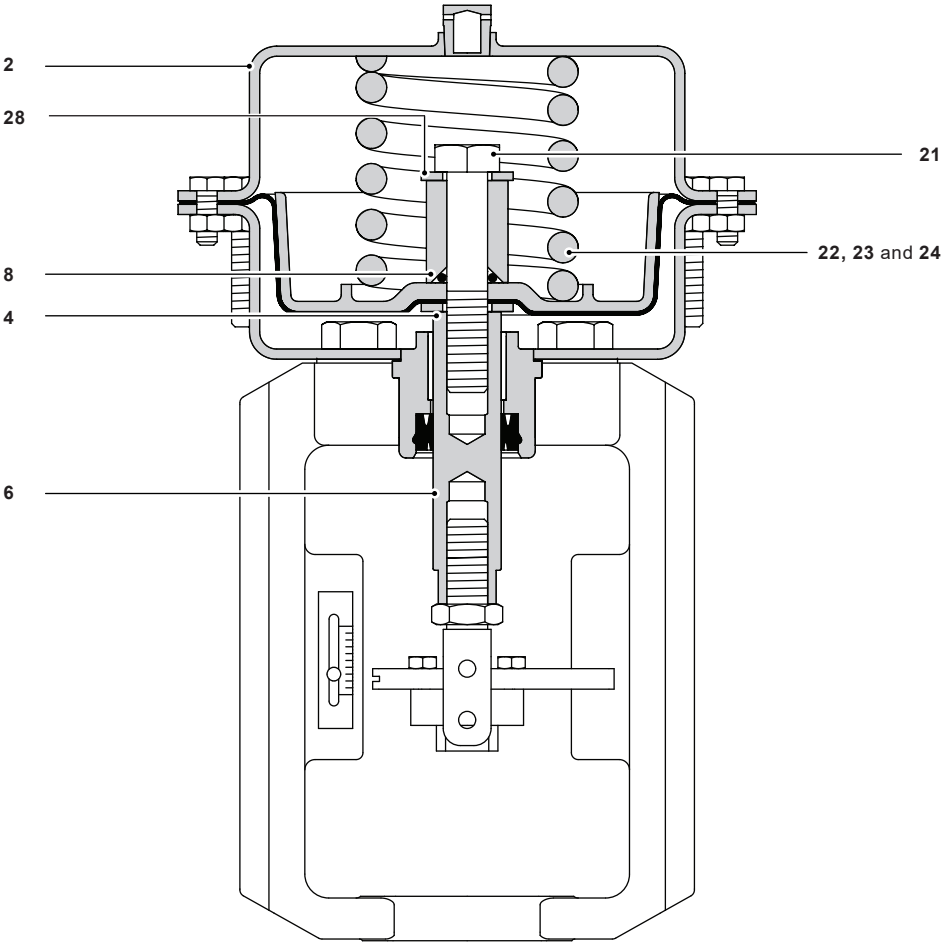

Fig. 9 PN9100E spring-extend

SHOPVALVES
GLOBAL VALVE SOLUTIONS | 阀门易购

SHOPVALVES
GLOBAL VALVE SOLUTIONS | 阀门易购

5.3.2 Spring kit - How to fit:

Warning
Before commencing any work please refer to Section 5 Safety Information - Maintenance.

- Remove the actuator from the valve as described in Section 5.2.

Warning
There are 3 off longer housing screws (23) which are fitted to safely allow spring decompression. These MUST be removed last after all other screws are removed and should be loosened evenly to prevent damage to the actuator or valve and to prevent uncontrollable and rapid decompression of the spring preload.

Refer to Section 5.5 if a handwheel is fitted.

- Lubricate the threads of the three long hex. head screws with a PTFE based grease before releasing the tension in the springs.
- Loosen and remove the short housing screws and nuts (**22**, **23** and **24**).
- Holding each nut with a spanner, rotate the three long hex. head screws (**23**) a few turns at a time. Remove the screws and upper housing (**2**).
- Replace with new springs. While supporting the actuator spindle (**6**) so that the diaphragm sits evenly in the lower housing, refit the top housing (**2**) and tighten the screws evenly. Please observe Note 2, above. Refer to Section 5.5 if a handwheel is fitted.

Table 1 Recommended tightening torques

Actuator series	Screws and nuts (Items 22, 23 and 24)			Bolt (Item 21)		
	Size	Torque		Size	Torque	
		N m	lbf ft		N m	lbf ft
PN9100	M6	12	8.9	M12	50	36.9
PN9200	M10	35	26.0	M12		
PN9300	M10	35	26.0	M12		

SHOPVALVES
GLOBAL VALVE SOLUTIONS | 阀门易购

SHOPVALVES
GLOBAL VALVE SOLUTIONS | 阀门易购

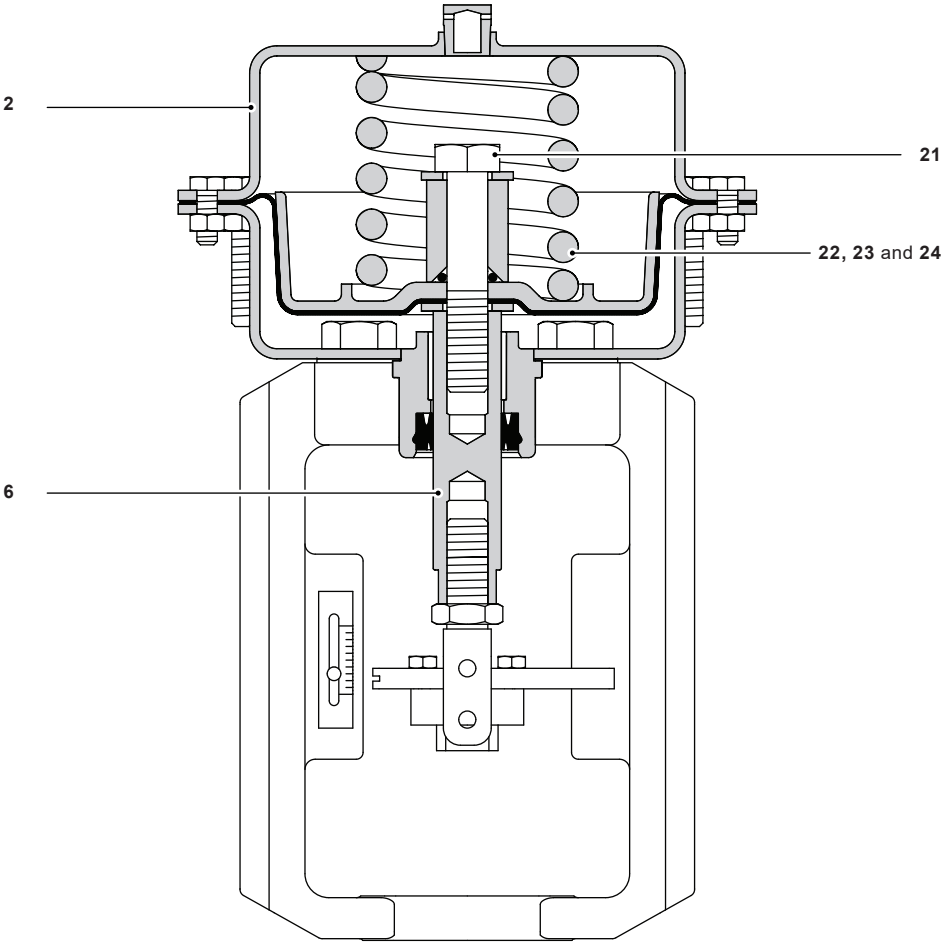

Fig. 10 PN9100E spring-extend

SHOPVALVES
GLOBAL VALVE SOLUTIONS | 阀门易购

SHOPVALVES
GLOBAL VALVE SOLUTIONS | 阀门易购

5.4 PN9000R spring-retract

5.4.1 Diaphragm kit - How to fit

Warning
Before commencing any work please refer to Section 5 Safety Information - Maintenance.

- Remove the actuator from the valve as described in Section 5.2.

Warning
There are 3 off longer housing screws (23) which are fitted to safely allow spring decompression. These MUST be removed last after all other screws are removed and should be loosened evenly to prevent damage to the actuator or valve and to prevent uncontrollable and rapid decompression of the spring preload.

- Lubricate the threads of the three long hex. head screws with a PTFE based grease before releasing the tension in the springs.
- Loosen and remove the short housing screws and nuts (**22**, **23** and **24**).
- Holding each nut with a spanner, rotate the three long hex. head screws (**23**) a few turns at a time. Remove the screws and upper housing (**2**).
- Using a spanner to hold the actuator spindle (**6**), loosen and withdraw the bolt (**21**).
- Taking care not to damage the 'O' ring (**9**) fitted between the diaphragm support plate (**3**) and spacer (**8**), remove the washer (**28**) and the diaphragm (**4**).
- Refit the new diaphragm (**4**) reassembling all items in reverse order. It is recommended that Loctite 243 be applied to the upper thread of the spindle (**6**) prior to tightening. Ensure spring or springs are correctly seated. Using a spanner to hold actuator spindle (**6**) and tighten the bolt (**21**). Refer to Table 1, for the recommended tightening torques.
- Refit the upper housing (**2**) and securing nuts and screws (**22**, **23** and **24**).

Note: Tighten the housing securing screws evenly to avoid distortion. 3 off longer housing screws (**22**) are provided on some spring ranges to cater for longer springs. If supplied, these should be positioned 120° apart and tightened evenly prior to fitting the remaining bolts.

SHOPVALVES
GLOBAL VALVE SOLUTIONS | 阀门易购

SHOPVALVES
GLOBAL VALVE SOLUTIONS | 阀门易购

Table 1 Recommended tightening torques

Actuator series	Screws and nuts (Items 22, 23 and 24)			Bolt (Item 21)		
	Size	Torque		Size	Torque	
		N m	lbf ft		N m	lbf ft
PN9100	M6	12	8.9	M12	50	36.9
PN9200	M10	35	26.0	M12		
PN9300	M10	35	26.0	M12		

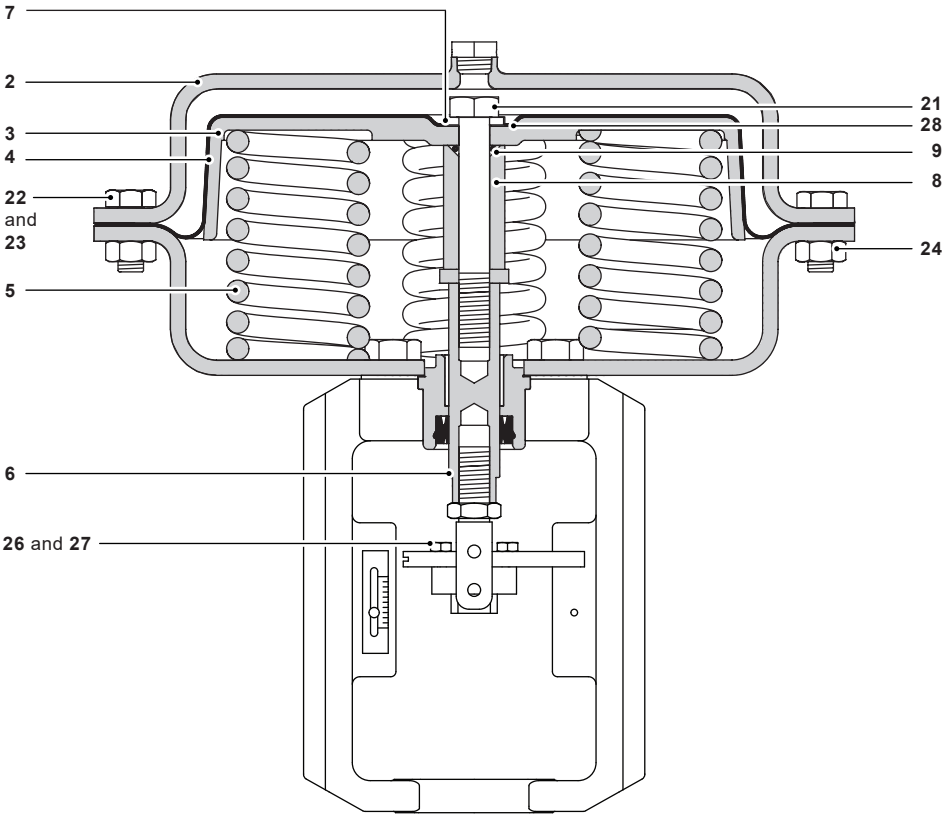

Fig. 11 PN9000R spring-retract

SHOPVALVES
GLOBAL VALVE SOLUTIONS | 阀门易购

SHOPVALVES
GLOBAL VALVE SOLUTIONS | 阀门易购

5.4.2 Spring kit - How to fit:

Warning
Before commencing any work please refer to Section 5 Safety Information - Maintenance.

- Remove the actuator from the valve as described in Section 5.2.

Warning
There are 3 off longer housing screws (23) which are fitted to safely allow spring decompression. These MUST be removed last after all other screws are removed and should be loosened evenly to prevent damage to the actuator or valve and to prevent uncontrollable and rapid decompression of the spring preload.

- Lubricate the threads of the three long hex. head screws with a PTFE based grease before releasing the tension in the springs.
- Loosen and remove the short housing screws and nuts (**22**, **23** and **24**).
- Holding each nut with a spanner, rotate the three long hex. head screws (**23**) a few turns at a time. Remove the screws and upper housing (**2**).
- Taking care not to damage the 'O' ring (**9**) fitted between the diaphragm support plate (**3**) and spacer (**8**), remove the washer (**28**) and the diaphragm (**4**).
- Using a spanner to hold the actuator spindle (**6**), loosen and withdraw the bolt (**21**). Remove the washer (**7**), the diaphragm (**4**) and the diaphragm plate (**3**). Remove the springs (**5**) taking note of their location.
- Replace the new springs (**5**) locating them in the same position as the previous set.
- Refit the top housing (**2**) and securing nuts and screws (**22**, **23** and **24**).

Refer to Table 1, for the recommended tightening torques.

Note: Tighten the housing securing screws evenly to avoid distortion. 3 off longer housing screws (**23**) are provided on some spring ranges to cater for longer springs. If supplied, these should be positioned 120° apart and tightened evenly prior to fitting the remaining bolts.

SHOPVALVES
GLOBAL VALVE SOLUTIONS | 阀门易购

SHOPVALVES
GLOBAL VALVE SOLUTIONS | 阀门易购

Table 1 Recommended tightening torques

Actuator series	Screws and nuts (Items 22, 23 and 24)			Bolt (Item 21)		
	Size	Torque		Size	Torque	
		N m	lbf ft		N m	lbf ft
PN9100	M6	12	8.9	M12	50	36.9
PN9200	M10	35	26.0	M12		
PN9300	M10	35	26.0	M12		

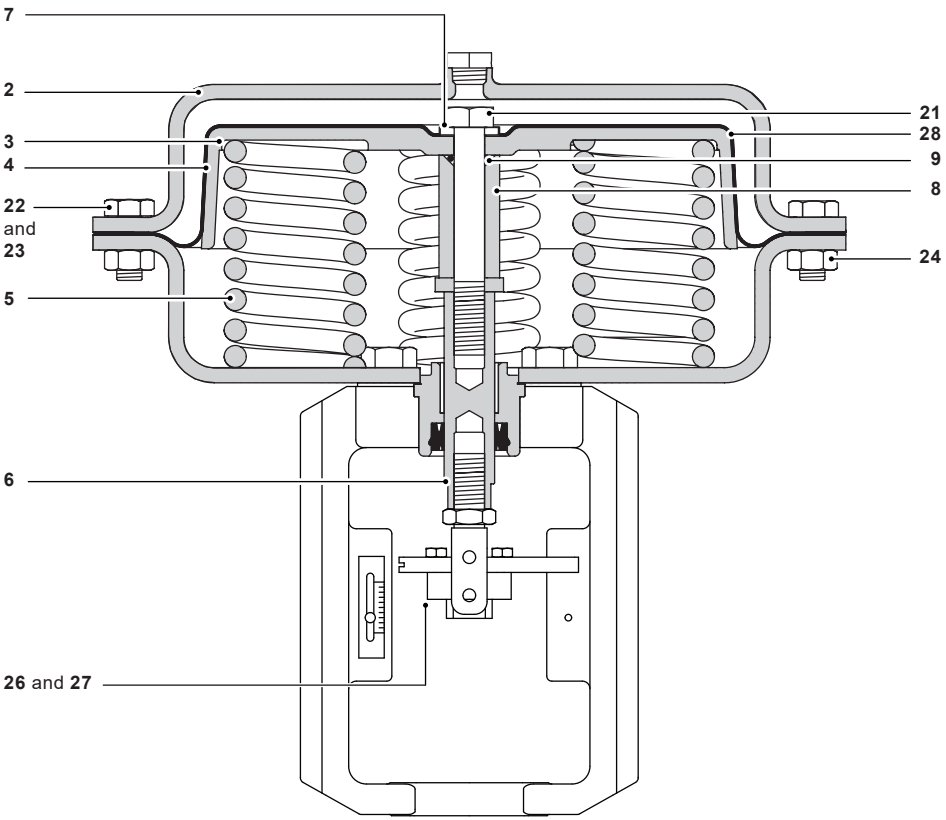

Fig. 12 PN9000R spring-retract

SHOPVALVES
GLOBAL VALVE SOLUTIONS | 阀门易购

SHOPVALVES
GLOBAL VALVE SOLUTIONS | 阀门易购

5.5 PN9000EH (handwheel) all models with exception to the PN9337EH:

Warning
Before commencing any work please refer to Section 5 Safety Information - Maintenance.

Note: For obsolete product PN9337E-H please contact your local Spirax Sarco engineer.

Note: Ensure that the handwheel has no compressive load on the actuator springs.

- Remove the plastic barrel plug (**A**), hold the actuator spindle at point (**B**) with a spanner and simultaneously loosen and remove the screw (**C**).
- Remove the handwheel (**D**), taking care not to displace the internal bearing (**F**).
- The upper housing can now be removed following the relevant steps in Section 5.3.1
- Remove the spindle connector (**E**) if the diaphragm needs to be replaced.
- To re-attach the handwheel, the above procedure should be reversed. Refer to Table 2 for the correct tightening torques.

Note: care must be taken not to damage the diaphragm. Ensure the actuator spindle does not rotate when tightening the spindle connector. The handwheel must not have anycompressive load on the springs when returning to automated control.

SHOPVALVES
GLOBAL VALVE SOLUTIONS | 阀门易购

SHOPVALVES
GLOBAL VALVE SOLUTIONS | 阀门易购

Table 2 Recommended handwheel tightening torques

Screw **C**		Spindle connector **E**	
N m	lbf ft	N m	lbf ft
20	29.5	50	36.9

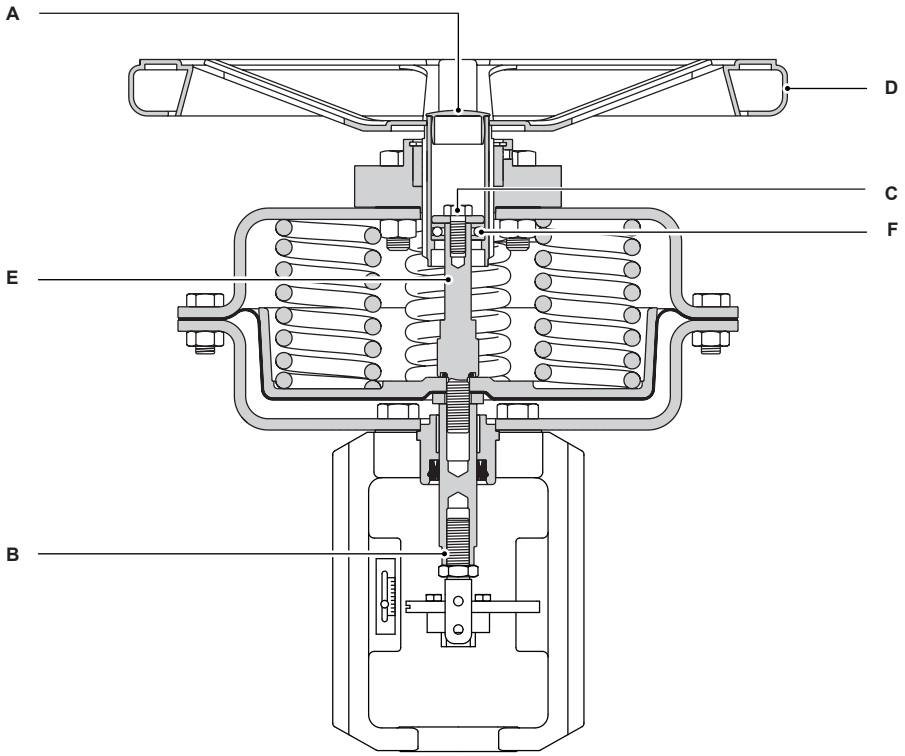

Fig. 13

SHOPVALVES
GLOBAL VALVE SOLUTIONS | 阀门易购

SHOPVALVES
GLOBAL VALVE SOLUTIONS | 阀门易购

5.6 PN9100RH, PN9200RH and PN9300RH (handwheel)

Note: Ensure that the handwheel has no compressive load on the actuator springs

- With due allowance for the additional weight all servicing can be carried out as detailed in Section 5.5. The handwheel assembly can be left attached to the upper housing.

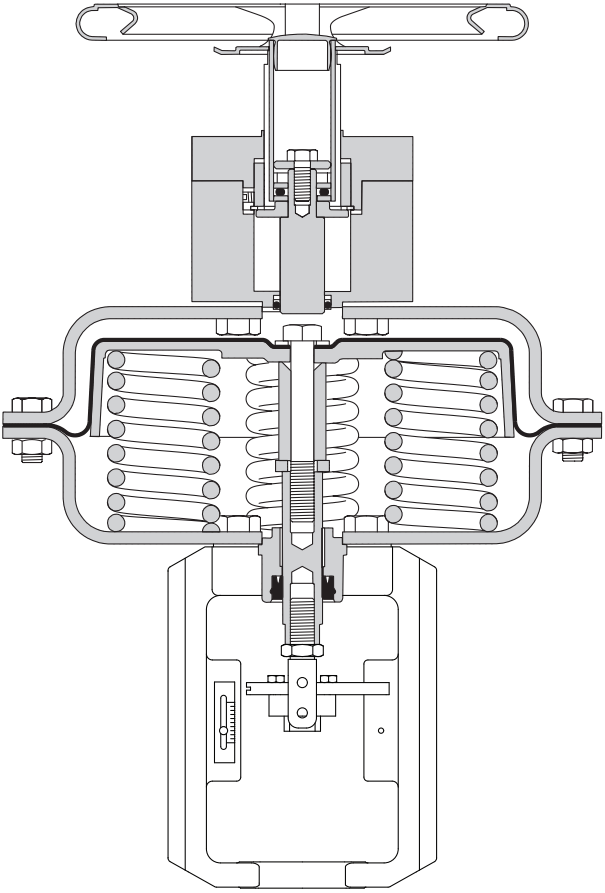

Fig. 14

SHOPVALVES
GLOBAL VALVE SOLUTIONS | 阀门易购

SHOPVALVES
GLOBAL VALVE SOLUTIONS | 阀门易购

5.7 How to replace the stem seal

Warning
Before commencing any work please refer to Section 5 Safety Information - Maintenance.

- Remove the diaphragm from the actuator as described in Section 5.3.1 for Extend version and 5.4.1 for Retract version.
- Before refitting the diaphragm (**4**), remove the stem (**6**) from the housing, and then remove and safely dispose of the stem seal (**17**) and stem bearing (**18**) in line with local regulations.
- Refit the new stem seal (**17**) and stem bearing (**18**), and refit the stem (**6**) into the stem seal (**17**) and bearing (**18**)
- Proceed to diaphragm refit as described in Section 5.3.1 for Extend version and 5.4.1 for Retract version.

SHOPVALVES
GLOBAL VALVE SOLUTIONS | 阀门易购

SHOPVALVES
GLOBAL VALVE SOLUTIONS | 阀门易购

6. Spare parts

Spare parts - PN9100, PN9200 and PN9300

The only spares available are clearly indicated below and are common for both spring-extend and spring-retract versions.

Available spares	**Stem seal kit**	PN9100, PN9200 and PN9300	**17, 18, 30**
	Diaphragm kit	PN9100, PN9200 and PN9300	**4, 9**
	Travel indicator kit	PN9100, PN9200 and PN9300	**15, 19, 20**
	Spring kit	PN9100, PN9200 and PN9300	**5**
	Linkage kit	PN9100, PN9200 and PN9300	
	(suitable for Mk1 and Spira-trol™ valves)		**10, 13, 26**

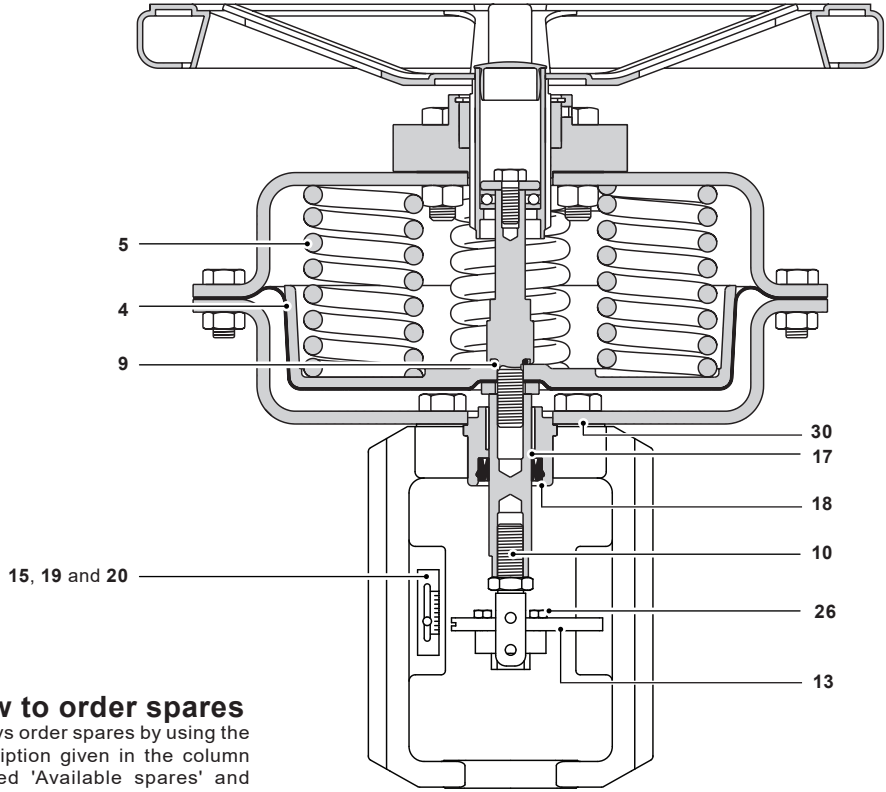

Fig. 15 PN9100, PN9200 and PN9300

How to order spares

Always order spares by using the description given in the column headed 'Available spares' and state the actuator model.

Example: 1 - Stem seal kit for a PN9120 pneumatic actuator.

SHOPVALVES
GLOBAL VALVE SOLUTIONS | 阀门易购

SHOPVALVES
GLOBAL VALVE SOLUTIONS | 阀门易购

SHOPVALVES
GLOBAL VALVE SOLUTIONS | 阀门易购

SHOPVALVES
GLOBAL VALVE SOLUTIONS | 阀门易购

SHOPVALVES
GLOBAL VALVE SOLUTIONS | 阀门易购