Local regulations may restrict the use of this product to below the conditions quoted.
In the interests of development and improvement of the product, we reserve the right to change the specification without notice. © Copyright 2025

PN9000 Series Pneumatic Actuators for use with Spira-trol™ Control Valves

Description

The PN9000 series actuators are a compact range of linear actuators that are available in 3 diaphragm sizes for matching the requirements of valves at various differential pressures.
Each actuator is fitted with a mechanical travel indicator and incorporates a fully-rolling diaphragm, which provides good linearity over the operating stroke.

Available types	**PN** = Standard	**Suffix E** = Spring-extend	**Important note:** Throughout this document, reference has been made to the PN actuator.
		Suffix R = Spring-retract	
Optional extra	**Manual handwheel**	**Suffix H**	
Fast speed		**Suffix F**	

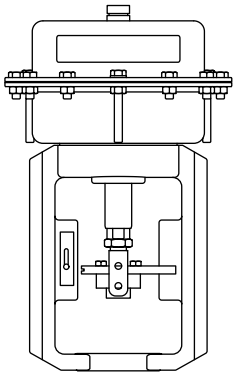

PN9100

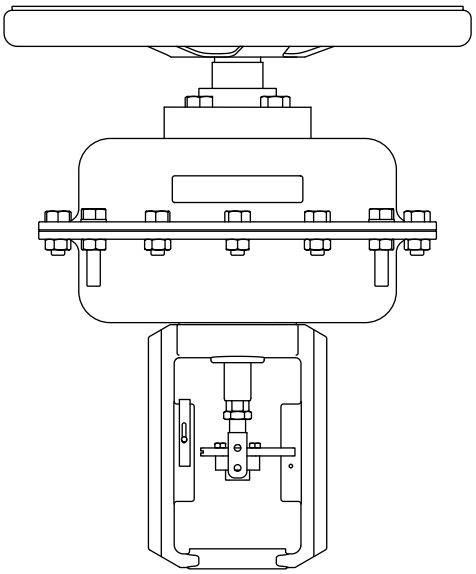

PN9200EH

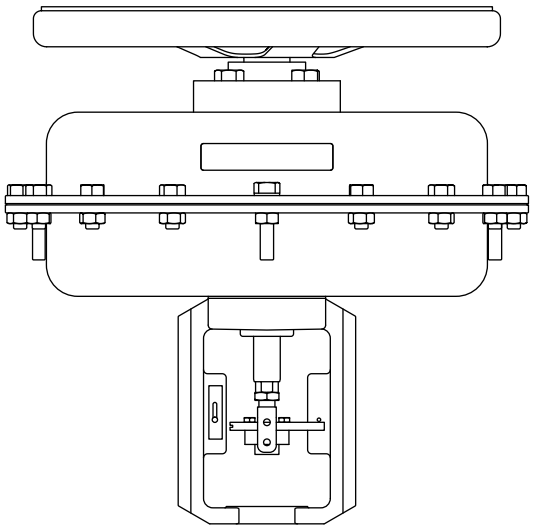

PN9330EH

SHOPVALVES
GLOBAL VALVE SOLUTIONS | 阀门易购

Actuator force available in relation to motive air pressure

Actuator	Area of diaphragm (cm²)	Spring rating (bar)		Spring force E = Closed / R = Opened (N)	Actuator force available in relation to motive air pressure (N)					
					1	2	3	4	5	6
PN91_0 _	100	0.2	1.0	200		1000	2000	3000	4000	5000
PN91_0 _	100	0.4	1.2	400		800	1800	2800	3800	4800
PN91_6 _	100	1.0	2.0	1000			1000	2000	3000	4000
PN91_3 _	100	2.0	4.0	2000					1000	2000
PN92_0 _	340	0.2	1.0	680		3400	6800	10200		
PN92_0 _	340	0.4	1.2	1360		2720	6120	9520		
PN92_6 _	340	1.0	2.0	3400			3400	6800	10200	13600
PN92_3 _	340	2.0	4.0	6800					3400	6800
PN93_0 _	670	0.2	1.0	1340		6700	13400			
PN93_0 _	670	0.4	1.2	2680		5360	12060			
PN93_7 _	670	2.5	3.5	16750				3350		

Technical data

Temperature range	**Reinforced NBR Diaphragm**	- 20 °C to +110 °C
	EPDM (T version)	-20 °C to +130 °C
Maximum operating inlet pressure	**PN9100**	6 bar g
	PN9220E/PN9230E	3 bar g
	PN9226E/PN9236E	4 bar g
	PN9223E/PN9233E and PN9200R	6 bar g
	PN9320E/PN9330E	2 bar g
	PN9337E	4 bar g
	PN9300R	2.7 bar g
Air supply connection		¼" NPT
Actuator travel	**PN9100**	20 mm
	PN922_ and PN932_	20 mm
	PN923_ and PN933_	30 mm
Reinforced NBR diaphragm		

Compliance

The PN9000 series actuator, when coupled to the Spira-trol™ control valve (as defined in the Technical Information sheets TI-S24-71 and TI-S24-72), complies with the requirements of Machinery Directive 2006/42EC. Please refer to the Installation and Maintenance Instructions for the PN9000 series (IM-P357-29) and the Spira-trol™ valve (IM-S24-42) for potential hazards and safety information relating to the installation, commissioning, maintenance and disposal of the product assembly and its component parts.

SHOPVALVES
GLOBAL VALVE SOLUTIONS | 阀门易购

SHOPVALVES
GLOBAL VALVE SOLUTIONS | 阀门易购

Materials

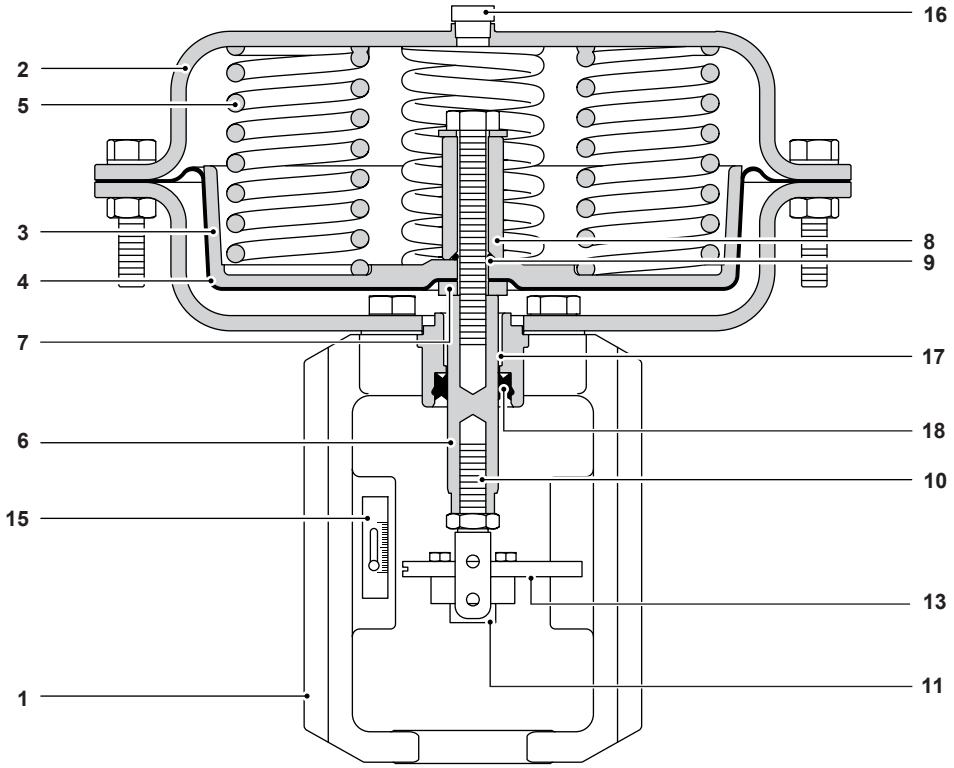

No.	Part	Material	
1	Yoke	SG iron	
2	Upper diaphragm housing	Carbon steel	
3	Diaphragm plate	Aluminium	
4	Diaphragm (optional EPDM for T version)	Reinforced NBR	
5	Spring	Spring steel	
6	Spindle	Stainless steel	
7	Washer	Carbon steel (Zn. plated)	
8	Spacer	Carbon steel (Zn. plated)	
9	'O' ring	Viton	
10	Setting screw	Stainless steel	BS 970 431 S29
11	Adaptor	Stainless steel	BS 970 431 S29
13	Antirotation/Indicator plate	Stainless steel	304
15	Scale	Stainless steel	BS 1449 304 S16
16	Vent plug	PELD	
17	Bearing	PTFE/steel composite	
18	Seal	Polyurethane (FKM for T version)	

Materials continued on next page

SHOPVALVES
GLOBAL VALVE SOLUTIONS | 阀门易购

SHOPVALVES
GLOBAL VALVE SOLUTIONS | 阀门易购

Materials (continued)

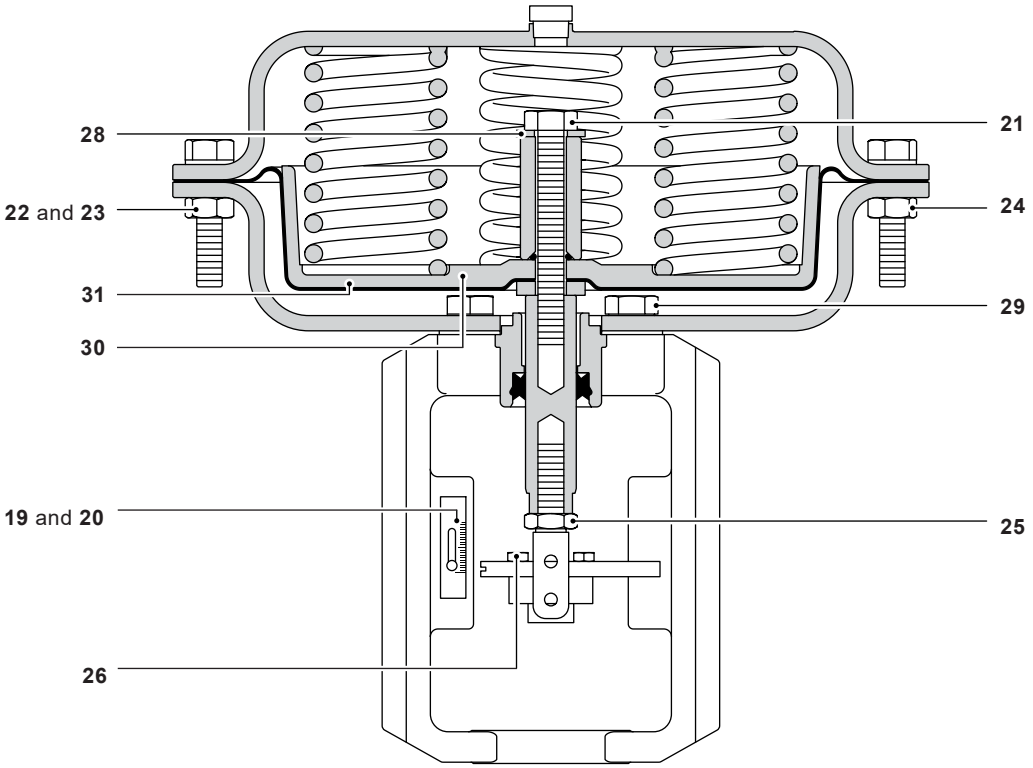

No.	Part		Material	
19 **20**	Pan head screw Nyloc nut		Stainless steel	A2 - 70
21	Bolt		Carbon steel (Zn. plated)	Gr. 8.8
22 **23** **24**	Hex. head screw (short) Hex. head screw (long) Nut		Carbon steel (Zn. and AL. plated)	Gr. 8.8
25	Lock-nut		Stainless steel	A2 - 70
26	Bolt		Stainless steel	A2 - 70
28	Washer		Carbon steel (Zn. plated)	
29	Hex. head screw		Carbon steel (Zn. plated)	Gr. 8.8 (Gr. 10.9 for PN9300R)
30	Gasket		Reinforced Graphite	
31	Lower diaphragm housing		Carbon steel (Zn. plated)	
32	Thrust plate	PN9300R only	Carbon steel	

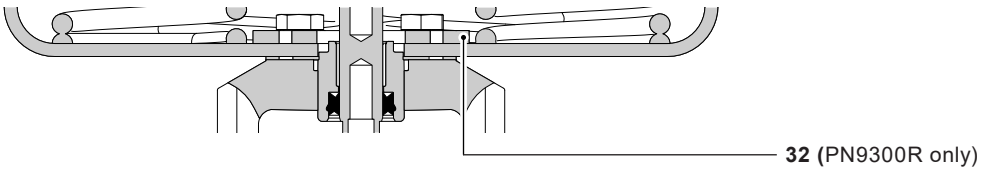

SHOPVALVES
GLOBAL VALVE SOLUTIONS | 阀门易购

SHOPVALVES
GLOBAL VALVE SOLUTIONS | 阀门易购

Dimensions/weights (approximate) in mm and kg

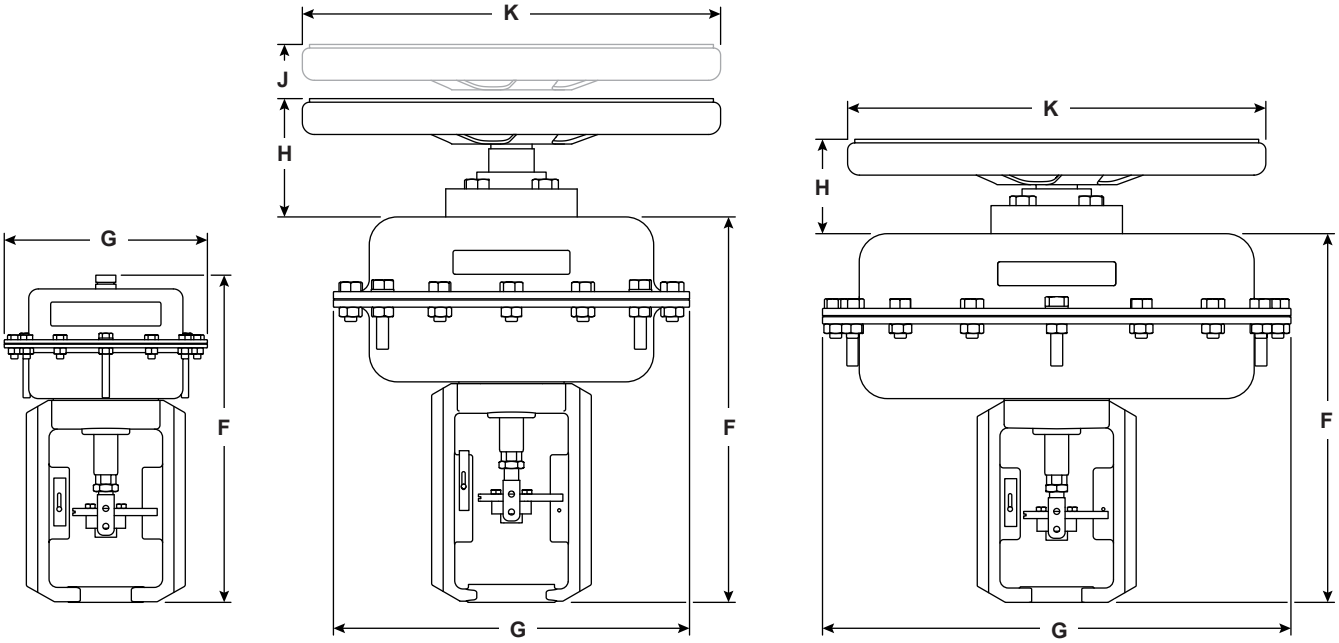

PN9100 PN9200EH PN9330EH

Actuator range	F	G	H	J (Handwheel lifted)	K	Weight	
						Actuator	With handwheel
PN9100E and variants	275	170	55	75	225	6	+ 5.86
PN9100R and variants	275	170	120	140	225	6	+ 2.50
PN9200E and variants	300	300	65	85	350	17	+ 7.20
PN9200R and variants	300	300	132	152	350	17	+ 3.77
PN9230E and variants	335	300	65	95	350	17	+ 3.77
PN9230R and variants	335	300	122	152	350	17	+ 3.77
PN9320E and variants	325	390	65	85	350	27	+ 7.20
PN9320R and variants	325	390	132	152	350	27	+ 3.77
PN9330E and variants	335	390	65	95	350	27	+ 7.20
PN9330R and variants	335	390	122	152	350	27	+ 3.70
PN9337E and variants	335	390	410	410	350	27	

How to use the sizing data on pages 6 to 25:

The following tables supply guidance as to the sizing of the PN9000 when it is used on a Spira-trolTM control valve.

Two conditions are illustrated in tabular form:
Class IV shut-off - Providing shut-off of the valve to the requirements of BS 5793-4 (IEC 60534-4) class IV.
Class VI shut-off - Providing shut-off of the valve to the requirements of BS 5793-4 (IEC 60534-4) class VI.

To select a suitable actuator:

- Identify the column containing the valve and gland material selected.
- Identify the maximum operating pressure condition, including any transient pressures likely to occur, within the selected column.
- Read back to the left hand side of the table to identify the suitable actuator for the application.

For conditions outside of those illustrated please contact Spirax Sarco.

SHOPVALVES
GLOBAL VALVE SOLUTIONS | 阀门易购

SHOPVALVES
GLOBAL VALVE SOLUTIONS | 阀门易购

PN9000E
- Maximum differential pressures for Class IV shut-off
- Metal Seated (T & S)
- Spira-trol
- DN15 - 25 (½" - 1")
- Flow under

Actuator	Spring range bar	Cage Type	Standard Cage (S)																	
		Valve size	DN15-25 (½"-1")																	
		Kvs (Cv)	0.01-0.07 (0.012-0.081)			0.1-0.2 (0.12-0.23)			0.5 (0.58)			1.0 (1.2)			1.6 (1.8)			2.5 (2.9)		
		Maximum pressure (bar g)	N-P	H	D	N-P	H	D	N-P	H	D	N-P	H	D	N-P	H	D	N-P	H	D
PN9120E	0.2-1.0	6.0	51.1			50.2														
PN9120E	0.4-1.2	6.0	51.1		25.0	51.1		25.0	51.1		25.0	51.1		17.6	26.5		0.6	12.2		
PN9126E	1.0-2.0	6.0	51.1	29.5	25.0	51.1	51.1	25.0	51.1	51.1	25.0	51.1	51.1	25.0	51.1	51.1	25.0	51.1	47.3	25.0
PN9123E	2.0-4.0	6.0	51.1	51.1	25.0	51.1	51.1	25.0	51.1	51.1	25.0	51.1	51.1	25.0	51.1	51.1	25.0	51.1	51.1	25.0
PN9220E	0.2-1.0	3.0	51.1	4.8	25.0	51.1	51.1	25.0	51.1	51.1	25.0	51.1	51.1	25.0	51.1	25.7	25.0	51.1	11.7	25.0
PN9220E	0.4-1.2	3.0	51.1	51.1	25.0	51.1	51.1	25.0	51.1	51.1	25.0	51.1	51.1	25.0	51.1	51.1	25.0	51.1	51.1	25.0
PN9226E	1.0-2.0	4.0	51.1	51.1	25.0	51.1	51.1	25.0	51.1	51.1	25.0	51.1	51.1	25.0	51.1	51.1	25.0	51.1	51.1	25.0
PN9223E	2.0-4.0	6.0	51.1	51.1	25.0	51.1	51.1	25.0	51.1	51.1	25.0	51.1	51.1	25.0	51.1	51.1	25.0	51.1	51.1	25.0
PN9320E	0.2-1.0	2.0	51.1	51.1	25.0	51.1	51.1	25.0	51.1	51.1	25.0	51.1	51.1	25.0	51.1	51.1	25.0	51.1	51.1	25.0
PN9320E	0.4-1.2	2.0	51.1	51.1	25.0	51.1	51.1	25.0	51.1	51.1	25.0	51.1	51.1	25.0	51.1	51.1	25.0	51.1	51.1	25.0

Actuator	Spring range bar	Cage Type	Standard Cage (S)															Low noise cage - P1		
		Valve size	DN15-25 (½"-1")																	
		Kvs (Cv)	4.0 (4.6)			4.9-6.3 (5.7-7.3)			7.2 (8.3)			10 (12)			11 (12.7)			2.5-4-6.3-10 (2.9-4.6-7.3-12)		
		Maximum pressure (bar g)	N-P	H	D	N-P	H	D	N-P	H	D	N-P	H	D	N-P	H	D	N-P	H	D
PN9120E	0.4-1.2	6.0	5.1																	
PN9126E	1.0-2.0	6.0	51.1	29.5	25.0	27.8	12.9	21.3	20.5	8.7	15.4	15.4	5.8	11.2	11.4	3.7	8.0	11.4	3.7	8.0
PN9123E	2.0-4.0	6.0	51.1	51.1	25.0	51.1	51.1	25.0	51.1	46.4	25.0	45.9	36.4	25.0	36.2	28.5	25.0	36.2	28.5	25.0
PN9220E	0.2-1.0	3.0	31.3	4.8	19.8	13.8		7.4	9.5		4.4	6.5		2.3	4.2		0.8	4.2		0.8
PN9220E	0.4-1.2	3.0	51.1	51.1	25.0	47.7	32.7	25.0	36.2	24.4	25.0	28.1	18.6	24.0	21.7	14.0	18.4	21.7	14.0	18.4
PN9226E	1.0-2.0	4.0	51.1	51.1	25.0	51.1	51.1	25.0	51.1	51.1	25.0	51.1	51.1	25.0	51.1	51.1	25.0	51.1	51.1	25.0
PN9223E	2.0-4.0	6.0	51.1	51.1	25.0	51.1	51.1	25.0	51.1	51.1	25.0	51.1	51.1	25.0	51.1	51.1	25.0	51.1	51.1	25.0
PN9320E	0.2-1.0	2.0	51.1	51.1	25.0	46.7	31.8	25.0	35.4	23.6	25.0	27.5	17.9	23.3	21.2	13.5	17.9	21.2	13.5	17.9
PN9320E	0.4-1.2	2.0	51.1	51.1	25.0	51.1	51.1	25.0	51.1	51.1	25.0	51.1	51.1	25.0	51.1	48.1	25.0	51.1	48.1	25.0

SHOPVALVES
GLOBAL VALVE SOLUTIONS | 阀门易购

SHOPVALVES
GLOBAL VALVE SOLUTIONS | 阀门易购

PN9000R
- Maximum differential pressures for Class IV shut-off
- Metal Seated (T & S)
- Spira-trol
- DN15 - 25 (½" - 1")
- Flow under

Actuator	Spring range bar	Cage Type	Standard Cage (S)																	
		Valve size	DN15-25 (½"-1")																	
		Kvs (Cv)	0.01-0.07 (0.012-0.081)			0.1-0.2 (0.12-0.23)			0.5 (0.58)			1.0 (1.2)			1.6 (1.8)			2.5 (2.9)		
		Maximum pressure (bar g)	N-P	H	D	N-P	H	D	N-P	H	D	N-P	H	D	N-P	H	D	N-P	H	D
PN9120R	0.2-1.0	6.0	51.1	51.1	25.0	51.1	51.1	25.0	51.1	51.1	25.0	51.1	51.1	25.0	51.1	51.1	25.0	51.1	51.1	25.0
PN9120R	0.4-1.2	6.0	51.1	51.1	25.0	51.1	51.1	25.0	51.1	51.1	25.0	51.1	51.1	25.0	51.1	51.1	25.0	51.1	51.1	25.0
PN9126R	1.0-2.0	6.0	51.1	51.1	25.0	51.1	51.1	25.0	51.1	51.1	25.0	51.1	51.1	25.0	51.1	51.1	25.0	51.1	51.1	25.0
PN9123R	2.0-4.0	6.0	51.1	51.1	25.0	51.1	51.1	25.0	51.1	51.1	25.0	51.1	51.1	25.0	51.1	51.1	25.0	51.1	51.1	25.0
PN9220R	0.2-1.0	6.0	51.1	51.1	25.0	51.1	51.1	25.0	51.1	51.1	25.0	51.1	51.1	25.0	51.1	51.1	25.0	51.1	51.1	25.0
PN9220R	0.4-1.2	6.0	51.1	51.1	25.0	51.1	51.1	25.0	51.1	51.1	25.0	51.1	51.1	25.0	51.1	51.1	25.0	51.1	51.1	25.0
PN9226R	1.0-2.0	6.0	51.1	51.1	25.0	51.1	51.1	25.0	51.1	51.1	25.0	51.1	51.1	25.0	51.1	51.1	25.0	51.1	51.1	25.0
PN9223R	2.0-4.0	6.0	51.1	51.1	25.0	51.1	51.1	25.0	51.1	51.1	25.0	51.1	51.1	25.0	51.1	51.1	25.0	51.1	51.1	25.0
PN9320R	0.2-1.0	2.7	51.1	51.1	25.0	51.1	51.1	25.0	51.1	51.1	25.0	51.1	51.1	25.0	51.1	51.1	25.0	51.1	51.1	25.0
PN9320R	0.4-1.2	2.7	51.1	51.1	25.0	51.1	51.1	25.0	51.1	51.1	25.0	51.1	51.1	25.0	51.1	51.1	25.0	51.1	51.1	25.0

Actuator	Spring range bar	Cage Type	Standard Cage (S)															Low noise cage - P1		
		Valve size	DN15-25 (½"-1")																	
		Kvs (Cv)	4.0 (4.6)			4.9-6.3 (5.7-7.3)			7.2 (8.3)			10 (12)			11 (12.7)			2.5-4-6.3-10 (2.9-4.6-7.3-12)		
		Maximum pressure (bar g)	N-P	H	D	N-P	H	D	N-P	H	D	N-P	H	D	N-P	H	D	N-P	H	D
PN9120R	0.2-1.0	6.0	51.1	51.1	25.0	51.1	51.1	25.0	51.1	51.1	25.0	51.1	51.1	25.0	51.1	51.1	25.0	51.1	51.1	25.0
PN9120R	0.4-1.2	6.0	51.1	51.1	25.0	51.1	51.1	25.0	51.1	51.1	25.0	51.1	51.1	25.0	51.1	51.1	25.0	51.1	51.1	25.0
PN9126R	1.0-2.0	6.0	51.1	51.1	25.0	51.1	51.1	25.0	51.1	51.1	25.0	51.1	51.1	25.0	51.1	51.1	25.0	51.1	51.1	25.0
PN9123R	2.0-4.0	6.0	51.1	51.1	25.0	51.1	51.1	25.0	51.1	46.4	25.0	45.9	36.4	25.0	36.2	28.5	25.0	36.2	28.5	25.0
PN9220R	0.2-1.0	6.0	51.1	51.1	25.0	51.1	51.1	25.0	51.1	51.1	25.0	51.1	51.1	25.0	51.1	51.1	25.0	51.1	51.1	25.0
PN9220R	0.4-1.2	6.0	51.1	51.1	25.0	51.1	51.1	25.0	51.1	51.1	25.0	51.1	51.1	25.0	51.1	51.1	25.0	51.1	51.1	25.0
PN9226R	1.0-2.0	6.0	51.1	51.1	25.0	51.1	51.1	25.0	51.1	51.1	25.0	51.1	51.1	25.0	51.1	51.1	25.0	51.1	51.1	25.0
PN9223R	2.0-4.0	6.0	51.1	51.1	25.0	51.1	51.1	25.0	51.1	51.1	25.0	51.1	51.1	25.0	51.1	51.1	25.0	51.1	51.1	25.0
PN9320R	0.2-1.0	2.7	51.1	51.1	25.0	51.1	51.1	25.0	51.1	51.1	25.0	51.1	51.1	25.0	51.1	51.1	25.0	51.1	51.1	25.0
PN9320R	0.4-1.2	2.7	51.1	51.1	25.0	51.1	51.1	25.0	51.1	51.1	25.0	51.1	51.1	25.0	51.1	51.1	25.0	51.1	51.1	25.0

SHOPVALVES
GLOBAL VALVE SOLUTIONS | 阀门易购

SHOPVALVES
GLOBAL VALVE SOLUTIONS | 阀门易购

PN9000E
- Maximum differential pressures for Class IV shut-off
- Metal Seated (T & S)
- Spira-trol
- DN32 - 50 (1¼" - 2")
- Flow under

Actuator	Spring range bar	Cage Type	Standard Cage (S)																	
		Valve size	DN32-50 (1¼"-2")																	
		Kvs (Cv)	4.0 (4.6)			6.3 (7.3)			10 (12)			16 (18)			17.5 - 18 (20.2-21)			25 (29)		
		Maximum pressure (bar g)	N-P	H	D	N-P	H	D	N-P	H	D	N-P	H	D	N-P	H	D	N-P	H	D
PN9120E	0.4-1.2	6.0	7.9																	
PN9126E	1.0-2.0	6.0	51.1	31.5	25.0	30.3	15.4	23.8	17.4	7.8	13.2	13.5	5.6	10.1	9.5	3.4	6.9	3.6	0.3	2.2
PN9123E	2.0-4.0	6.0	51.1	51.1	25.0	51.1	51.1	25.0	47.9	38.4	25.0	38.8	30.9	25.0	29.1	23.0	25.0	14.2	10.9	12.7
PN9220E	0.2-1.0	3.0	33.2	7.6	22.1	16.3	1.4	9.9	8.5		4.3	6.2		2.7	3.8		1.2	0.5		
PN9220E	0.4-1.2	3.0	51.1	51.1	25.0	50.2	35.2	25.0	30.1	20.6	25.0	24.1	16.2	20.6	17.7	11.6	15.0	8.0	4.7	6.6
PN9226E	1.0-2.0	4.0	51.1	51.1	25.0	51.1	51.1	25.0	51.1	51.1	25.0	51.1	51.1	25.0	51.1	51.1	25.0	30.5	27.2	25.0
PN9223E	2.0-4.0	6.0	51.1	51.1	25.0	51.1	51.1	25.0	51.1	51.1	25.0	51.1	51.1	25.0	51.1	51.1	25.0	51.1	51.1	25.0
PN9320E	0.2-1.0	2.0	51.1	51.1	25.0	49.2	34.3	25.0	29.5	19.9	25.0	23.5	15.6	20.1	17.3	11.1	14.6	7.8	4.5	6.3
PN9320E	0.4-1.2	2.0	51.1	51.1	25.0	51.1	51.1	25.0	51.1	51.1	25.0	51.1	50.9	25.0	44.6	38.4	25.0	22.5	19.2	21.7

Actuator	Spring range bar	Cage Type	Standard Cage (S)						Low Noise Cage (P1)		
		Valve size	DN32-50 (1¼"-2")								
		Kvs (Cv)	31-36 (36-42)			46-50 (53-58)			All Kvs		
		Maximum pressure (bar g)	N-P	H	D	N-P	H	D	N-P	H	D
PN9126E	1.0-2.0	6.0	2.3		1.2	1.0			1.0		
PN9123E	2.0-4.0	6.0	10.8	8.1	9.6	7.0	5.1	6.2	7.0	5.1	6.2
PN9220E	0.4-1.2	3.0	5.8	3.2	4.7	3.5	1.6	2.7	3.5	1.6	2.7
PN9226E	1.0-2.0	4.0	23.8	21.2	22.7	16.3	14.4	15.5	16.3	14.4	15.5
PN9223E	2.0-4.0	6.0	51.1	51.1	25.0	37.7	35.8	16.0	37.7	35.8	25.0
PN9320E	0.2-1.0	2.0	5.7	3.0	4.5	3.4	1.5	2.5	3.4	1.5	2.5
PN9320E	0.4-1.2	2.0	17.5	14.8	16.3	11.8	9.9	11.0	11.8	9.9	11.0

SHOPVALVES
GLOBAL VALVE SOLUTIONS | 阀门易购

SHOPVALVES
GLOBAL VALVE SOLUTIONS | 阀门易购

PN9000R
- Maximum differential pressures for Class IV shut-off
- Metal Seated (T & S)
- Spira-trol
- DN32 - 50 (1¼" - 2")
- Flow under

Actuator	Spring range bar	Cage Type	Standard Cage (S)																	
		Valve size	DN32-50 (1¼"-2")																	
		Kvs (Cv)	4.0 (4.6)			6.3 (7.3)			10 (12)			16 (18)			17.5 - 18 (20.2-21)			25 (29)		
		Maximum pressure (bar g)	N-P	H	D	N-P	H	D	N-P	H	D	N-P	H	D	N-P	H	D	N-P	H	D
PN9120R	0.2-1.0	6.0	51.1	51.1	25.0	51.1	51.1	25.0	51.1	51.1	25.0	51.1	51.1	25.0	51.1	51.1	25.0	45.9	42.6	25.0
PN9120R	0.4-1.2	6.0	51.1	51.1	25.0	51.1	51.1	25.0	51.1	51.1	25.0	51.1	51.1	25.0	51.1	51.1	25.0	43.8	40.5	25.0
PN9126R	1.0-2.0	6.0	51.1	51.1	25.0	51.1	51.1	25.0	51.1	51.1	25.0	51.1	51.1	25.0	51.1	51.1	25.0	35.3	32.0	25.0
PN9123R	2.0-4.0	6.0	51.1	51.1	25.0	51.1	51.1	25.0	47.9	38.4	25.0	38.8	30.9	25.0	29.1	23.0	25.0	14.2	10.9	12.7
PN9220R	0.2-1.0	6.0	51.1	51.1	25.0	51.1	51.1	25.0	51.1	51.1	25.0	51.1	51.1	25.0	51.1	51.1	25.0	51.1	51.1	25.0
PN9220R	0.4-1.2	6.0	51.1	51.1	25.0	51.1	51.1	25.0	51.1	51.1	25.0	51.1	51.1	25.0	51.1	51.1	25.0	51.1	51.1	25.0
PN9226R	1.0-2.0	6.0	51.1	51.1	25.0	51.1	51.1	25.0	51.1	51.1	25.0	51.1	51.1	25.0	51.1	51.1	25.0	51.1	51.1	25.0
PN9223R	2.0-4.0	6.0	51.1	51.1	25.0	51.1	51.1	25.0	51.1	51.1	25.0	51.1	51.1	25.0	51.1	51.1	25.0	51.1	51.1	25.0
PN9320R	0.2-1.0	2.7	51.1	51.1	25.0	51.1	51.1	25.0	51.1	51.1	25.0	51.1	51.1	25.0	51.1	51.1	25.0	51.1	51.1	25.0
PN9320R	0.4-1.2	2.7	51.1	51.1	25.0	51.1	51.1	25.0	51.1	51.1	25.0	51.1	51.1	25.0	51.1	51.1	25.0	51.1	51.1	25.0

Actuator	Spring range bar	Cage Type	Standard Cage (S)						Low noise cage (P1)		
		Valve size	DN32-50 (1¼"-2")								
		Kvs (Cv)	31-36 (36-42)			46-50 (53-58)			All Kvs		
		Maximum pressure (bar g)	N-P	H	D	N-P	H	D	N-P	H	D
PN9120R	0.2-1.0	6.0	36.2	33.5	25.0	25.1	23.2	24.3	25.1	23.2	24.3
PN9120R	0.4-1.2	6.0	34.5	31.8	25.0	23.9	22.0	23.1	23.9	22.0	23.1
PN9126R	1.0-2.0	6.0	27.7	25.1	25.0	19.1	17.2	18.3	19.1	17.2	18.3
PN9123R	2.0-4.0	6.0	10.8	8.1	9.6	7.0	5.1	6.2	7.0	5.1	6.2
PN9220R	0.2-1.0	6.0	51.1	51.1	25.0	51.1	51.1	25.0	51.1	51.1	25.0
PN9220R	0.4-1.2	6.0	51.1	51.1	25.0	51.1	51.1	25.0	51.1	51.1	25.0
PN9226R	1.0-2.0	6.0	51.1	51.1	25.0	51.1	51.1	25.0	51.1	51.1	25.0
PN9223R	2.0-4.0	6.0	51.1	51.1	25.0	37.7	35.8	25.0	37.7	35.8	25.0
PN9320R	0.2-1.0	2.7	51.1	51.1	25.0	51.1	51.1	25.0	51.1	51.1	25.0
PN9320R	0.4-1.2	2.7	51.1	51.1	25.0	51.1	51.1	25.0	51.1	51.1	25.0

SHOPVALVES
GLOBAL VALVE SOLUTIONS | 阀门易购

SHOPVALVES
GLOBAL VALVE SOLUTIONS | 阀门易购

PN9000E
- Maximum differential pressures for Class IV shut-off
- Metal Seated (T & S)
- Spira-trol
- DN65 - 100 (2½" - 4")
- Flow under

Actuator	Spring range bar	Cage Type	Standard Cage (S)																	
		Valve size	DN65-100 (2½"-4")															DN100 (4")		
		Kvs (Cv)	16 (18)			25 (29)			36 (42)			63-73-90 (73-85-104)			100-117 (116-135)			160-180 (185-208)		
		Maximum pressure (bar g)	P	H	D	N-P	H	D	P	H	D	P	H	D	P	H	D			
PN9230E	0.2-1.0	3.0	2.8		1.2															
PN9230E	0.4-1.2	3.0	16.6	6.3	15.0	5.4	0.9	4.7	3.2		2.7	0.9		0.7						
PN9236E	1.0-2.0	4.0	51.1	47.8	25.0	23.4	18.9	22.7	16.0	12.8	15.5	8.2	6.4	7.9	4.7	3.5	4.5	2.5	1.8	2.4
PN9233E	2.0-4.0	6.0	51.1	51.1	16.0	51.1	48.9	25.0	37.4	34.2	25.0	20.2	18.4	19.9	12.4	11.2	6.5	7.3	6.6	7.2
PN9330E	0.2-1.0	2.0	16.2	5.9	14.6	5.2	0.7	4.5	3.0		2.5	0.9		0.6						
PN9330E	0.4-1.2	2.0	43.5	33.2	25.0	17.0	12.5	16.3	11.5	8.3	11.0	5.6	3.8	5.3	31.0	1.9	2.9	1.5	0.7	1.4
PN9337E	2.5-3.5	4.0	51.1	51.1	25.0	51.1	51.1	25.0	51.1	51.1	25.0	51.1	51.1	25.0	34.9	33.8	25.0	21.3	20.6	21.2

Actuator	Spring range bar	Cage Type	Low Noise Cage (P1)					
		Valve size	DN65-100 (2½"-4")			DN100 (4")		
		Kvs (Cv)	All Kvs			All Kvs		
		Maximum pressure (bar g)	P	H	D	P	H	D
PN9236E	1.0-2.0	4.0	4.7	3.5	4.5	2.5	1.8	2.4
PN9233E	2.0-4.0	6.0	12.4	11.2	12.2	7.3	6.6	7.2
PN9330E	0.4-1.2	2.0	3.1	1.9	2.9	1.5	0.7	1.4
PN9337E	2.5-3.5	4.0	34.9	33.8	25.0	21.3	20.6	21.2

SHOPVALVES
GLOBAL VALVE SOLUTIONS | 阀门易购

SHOPVALVES
GLOBAL VALVE SOLUTIONS | 阀门易购

PN9000R
- Maximum differential pressures for Class IV shut-off
- Metal Seated (T & S)
- Spira-trol
- DN65 - 100 (2½" - 4")
- Flow under

Actuator	Spring range bar	Cage Type	Standard Cage (S)																	
		Valve size	DN65-100 (2½"-4")																	
		Kvs (Cv)	16 (18)			25 (29)			36 (42)			63-73-90 (73-85-104)			100-117 (116-135)			160-180 (185-208)		
		Maximum pressure (bar g)	P	H	D	N-P	H	D	P	H	D	P	H	D	P	H	D	P	H	D
PN9230R	0.2-1.0	6.0	51.1	51.1	25.0	51.1	51.1	25.0	51.1	51.1	25.0	51.1	51.1	25.0	35.5	34.3	25.0	21.7	20.9	21.6
PN9230R	0.4-1.2	6.0	51.1	51.1	25.0	51.1	51.1	25.0	51.1	51.1	25.0	51.1	51.1	25.0	33.9	32.8	25.0	20.7	20.0	20.6
PN9236R	1.0-2.0	6.0	51.1	51.1	25.0	51.1	51.1	25.0	51.1	51.1	25.0	44.2	42.4	25.0	27.8	26.6	25.0	16.9	16.2	16.8
PN9233R	2.0-4.0	6.0	51.1	51.1	25.0	51.1	51.1	25.0	37.4	34.2	25.0	20.2	18.4	19.9	12.4	11.2	12.2	7.3	6.6	7.2
PN9330R	0.2-1.0	2.7	51.1	51.1	25.0	51.1	51.1	25.0	51.1	51.1	25.0	36.4	34.6	25.0	22.8	21.6	22.6	13.8	13.0	13.6
PN9330R	0.4-1.2	2.7	51.1	51.1	25.0	51.1	51.1	25.0	51.1	51.1	25.0	31.7	29.8	25.0	19.7	18.6	19.6	11.9	11.1	11.7

Actuator	Spring range bar	Cage Type	Low Noise Cage (P1)					
		Valve size	DN65-80 (2½"-3")			DN100		
		Kvs (Cv)	All Kvs			All Kvs		
		Maximum pressure (bar g)	P	H	D	P	H	D
PN9230R	0.2-1.0	6.0	35.5	34.3	25.0	21.7	20.9	21.6
PN9230R	0.4-1.2	6.0	33.9	32.8	25.0	20.7	20.0	20.6
PN9236R	1.0-2.0	6.0	27.8	26.6	25.0	16.9	16.2	16.8
PN9233R	2.0-4.0	6.0	12.4	11.2	12.2	7.3	6.6	7.2
PN9330R	0.2-1.0	2.7	22.8	21.6	22.6	13.8	13.0	13.6
PN9330R	0.4-1.2	2.7	19.7	18.6	19.6	11.9	11.1	11.7

SHOPVALVES
GLOBAL VALVE SOLUTIONS | 阀门易购

SHOPVALVES
GLOBAL VALVE SOLUTIONS | 阀门易购

PN9000E
- Maximum differential pressures for Class VI shut-off
- Resilient Seated (P & Steam-Tight)
- Spira-trol
- DN15 - 25 (½" - 1")
- Flow under

Actuator	Spring range bar	Cage Type	Standard Cage (S)																	
		Valve size	DN15-25 (½"-1")																	
		Kvs (Cv)	0.01-0.07 (0.012-0.081)			0.1-0.2 (0.12-0.23)			0.5 (0.58)			1.0 (1.2)			1.6 (1.8)			2.5 (2.9)		
		Maximum pressure (bar g)	N-P	H	D	N-P	H	D	N-P	H	D	N-P	H	D	N-P	H	D	N-P	H	D
PN9126E	1.0-2.0	6.0	19.0	19.0	19.0	19.0	19.0	19.0	19.0	19.0	19.0	19.0	19.0	19.0	19.0	19.0	19.0	19.0	19.0	19.0
PN9123E	1.0-2.0	6.0	19.0	19.0	19.0	19.0	19.0	19.0	19.0	19.0	19.0	19.0	19.0	19.0	19.0	19.0	19.0	19.0	19.0	19.0
PN9220E	0.2-1.0	3.0	19.0	19.0	19.0	19.0	19.0	19.0	19.0	19.0	19.0	19.0	19.0	19.0	19.0	19.0	19.0	19.0	19.0	19.0
PN9220E	0.4-1.2	3.0	19.0	19.0	19.0	19.0	19.0	19.0	19.0	19.0	19.0	19.0	19.0	19.0	19.0	19.0	19.0	19.0	19.0	19.0
PN9320E	0.2-1.0	2.0	19.0	19.0	19.0	19.0	19.0	19.0	19.0	19.0	19.0	19.0	19.0	19.0	19.0	19.0	19.0	19.0	19.0	19.0

Actuator	Spring range bar	Cage Type	Standard Cage (S)																		Low noise cage (P1-A1)		
		Valve size	DN15-25 (½"-1")																				
		Kvs (Cv)	4.0 (4.6)			4.9-6.3 (5.7-7.3)			7.2 (8.3)			10 (12)			11 (12.7)			2.5-4-6.3-10 (2.9-4.6-7.3-12)					
		Maximum pressure (bar g)	N-P	H	D	N-P	H	D	N-P	H	D	N-P	H	D	N-P	H	D	N-P	H	D	N-P	H	D
PN9126E	1.0-2.0	6.0	19.0	19.0	19.0	19.0	19.0	19.0	19.0	17.6	19.0	19.0	13.8	19.0	18.6	10.9	15.3	18.6	10.9	15.3			
PN9123E	1.0-2.0	6.0	19.0	19.0	19.0	19.0	19.0	19.0	19.0	19.0	19.0	19.0	19.0	16.0	19.0	19.0	19.0	19.0	19.0	19.0			
PN9220E	0.2-1.0	3.0	19.0	18.1	19.0	19.0	8.9	17.4	18.3	6.6	13.2	14.5	4.9	10.3	11.4	3.6	8.0	11.4	3.6	8.0			
PN9220E	0.4-1.2	3.0	19.0	19.0	19.0	19.0	19.0	19.0	19.0	19.0	19.0	19.0	19.0	19.0	19.0	19.0	19.0	19.0	19.0	19.0			
PN9320E	0.2-1.0	2.0	19.0	19.0	19.0	19.0	19.0	19.0	19.0	19.0	19.0	19.0	19.0	19.0	19.0	19.0	19.0	19.0	19.0	19.0			

SHOPVALVES
GLOBAL VALVE SOLUTIONS | 阀门易购

SHOPVALVES
GLOBAL VALVE SOLUTIONS | 阀门易购

PN9000E
- Maximum differential pressures for Class VI shut-off
- Resilient Seated (P & Steam-Tight)
- Spira-trol
- DN32 - 50 (1¼" - 2")
- Flow under

Actuator	Spring range bar	Cage Type	Standard Cage (S)																	
		Valve size	DN32-50 (1¼"-2")																	
		Kvs (Cv)	4.0 (4.6)			6.3 (7.3)			10 (12)			16 (18)			17.5 - 18 (20.2-21)			25 (29)		
		Maximum pressure (bar g)	N-P	H	D	N-P	H	D	N-P	H	D	N-P	H	D	N-P	H	D	N-P	H	D
PN9126E	1.0-2.0	6.0	19.0	19.0	19.0	19.0	19.0	19.0	19.0	13.8	19.0	19.0	11.1	15.6	14.0	8.2	11.7	7.1	3.8	
PN9123E	2.0-4.0	6.0	19.0	19.0	19.0	19.0	19.0	19.0	19.0	19.0	19.0	19.0	19.0	19.0	19.0	19.0	19.0	17.7	14.4	16.3
PN9220E	0.2-1.0	3.0	19.0	17.4	19.0	19.0	8.9	19.0	14.5	4.9	10.3	11.6	3.7	8.2	8.6	2.5	6.0	4.0	0.7	2.6
PN9220E	0.4-1.2	3.0	19.0	19.0	19.0	19.0	19.0	19.0	19.0	19.0	19.0	19.0	19.0	19.0	19.0	16.4	19.0	11.5	8.2	10.0
PN9320E	0.2-1.0	2.0	19.0	19.0	19.0	19.0	19.0	19.0	19.0	19.0	19.0	19.0	19.0	19.0	19.0	15.9	19.0	11.3	8.0	9.9

Actuator	Spring range bar	Cage Type	Standard Cage (S)						Low Noise Cage (P1-A1-P2-A2)		
		Valve size	DN32-50 (1¼"-2")								
		Kvs (Cv)	31-36 (36-42))			46-50 (53-58)			All Kvs		
		Maximum pressure (bar g)	N-P	H	D	N-P	H	D	N-P	H	D
PN9126E	1.0-2.0	6.0	5.5	2.8	4.3	3.6	1.7	2.8	3.6	1.7	2.8
PN9123E	2.0-4.0	6.0	13.9	11.3	12.8	9.7	7.8	8.8	9.7	7.8	8.8
PN9220E	0.2-1.0	3.0	3.0	0.4	1.9	1.9		1.1	1.9		1.1
PN9220E	0.4-1.2	3.0	9.0	6.4	7.9	6.1	4.3	5.3	6.1	4.3	5.3
PN9226E	1.0-2.0	4.0	19.0	19.0	19.0	19.0	17.1	18.2	19.0	17.1	18.2
PN9320E	0.2-1.0	2.0	8.8	6.2	7.7	6.0	4.1	5.2	6.0	4.1	5.2
PN9320E	0.4-1.2	2.0	8.8	6.2	7.7	6.0	4.1	5.2	6.0	4.1	5.2

SHOPVALVES
GLOBAL VALVE SOLUTIONS | 阀门易购

SHOPVALVES
GLOBAL VALVE SOLUTIONS | 阀门易购

PN9000E
- Maximum differential pressures for Class VI shut-off
- Resilient Seated (P & Steam-Tight)
- Spira-trol
- DN65 - 100 (2½" - 4")
- Flow under

Actuator	Spring range bar	Cage Type	Standard Cage (S)																	
		Valve size	DN65-100 (2½-4")																	
		Kvs (Cv)	16 (18)			25 (29)			36 (42)			63-73-90 (73-85-104)			100-117 (116-135)			160-180 (185-208)		
		Maximum pressure (bar g)	N-P	H	D	N-P	H	D	N-P	H	D	N-P	H	D	N-P	H	D	N-P	H	D
PN9230E	0.2-1.0	3.0	7.6		6.3	2.6		1.9	1.6		1.1	0.5		0.3						
PN9230E	0.4-1.2	3.0	19.0	11.1	19.0	8.6	4.1	7.9	5.8	2.6	5.3	2.9	1.1	2.7	1.7	0.5	1.5	0.9		0.8
PN9236E	1.0-2.0	4.0				19.0	19.0	19.0	18.7	15.5	18.2	10.2	8.4	9.9	6.3	5.1	6.1	3.7	3.0	3.6
PN9233E	2.0-4.0	6.0										19.0	19.0	19.0	14.0	12.8	5.0	8.5	7.8	8.4
PN9330E	0.2-1.0	2.0	19.0	10.7	19.0	8.4	3.9	7.7	5.7	2.5	5.2	2.9	1.1	2.6	1.6	0.5	1.4	0.8		0.7
PN9330E	0.4-1.2	2.0				19.0	15.7	19.0	14.1	10.0	13.6	7.6	5.8	7.3	4.7	3.5	4.5	2.7	2.0	2.6
PN9337E	2.5-3.5	4.0																19.0	19.0	19.0

Actuator	Spring range bar	Cage Type	Low Noise Cage (P1-A1-P2-A2)					
		Valve size	DN65-80 (2½"-3")			DN100 (4")		
		Kvs (Cv)	All Kvs			All Kvs		
		Maximum pressure (bar g)	N-P	H	D	N-P	H	D
PN9230E	0.2-1.0	3.0						
PN9230E	0.4-1.2	3.0	1.7	0.5	1.5	0.9		0.8
PN9236E	1.0-2.0	4.0	6.3	5.1	6.1	3.7	3.0	3.6
PN9233E	2.0-4.0	6.0	14.0	12.8	5.0	8.5	7.8	8.4
PN9330E	0.2-1.0	2.0	1.6	0.5	1.4	0.8		0.7
PN9330E	0.4-1.2	2.0	4.7	3.5	4.5	2.7	2.0	2.6
PN9337E	2.5-3.5	4.0				19.0	19.0	19.0

SHOPVALVES
GLOBAL VALVE SOLUTIONS | 阀门易购

SHOPVALVES
GLOBAL VALVE SOLUTIONS | 阀门易购

PN9000E
- Maximum differential pressures for Class IV shut-off
- Hard Facing (W)
- Spira-trol
- DN15 - 25 (½" - 1")
- Flow under

Actuator	Spring range bar	Cage Type	Standard Cage (S)																	
		Valve size	DN15-25 (½"-1")																	
		Kvs (Cv)	0.01-0.07 (0.012-0.081)			0.1-0.2 (0.12-0.23)			0.5 (0.58)			1.0 (1.2)			1.6 (1.8)			2.5 (2.9)		
		Maximum pressure (bar g)	N-P	H	D	N-P	H	D	N-P	H	D	N-P	H	D	N-P	H	D	N-P	H	D
PN9120E	0.2-1.0	6.0	51.1																	
PN9120E	0.4-1.2	6.0	51.1		25.0	51.1		25.0	51.1			39.8			6.5					
PN9126E	1.0-2.0	6.0	51.1	51.1	25.0	51.1	51.1	25.0	51.1	51.1	25.0	51.1	51.1	25.0	51.1	51.1	25.0	51.1	31.3	25.0
PN9123E	2.0-4.0	6.0	51.1	51.1	25.0	51.1	51.1	25.0	51.1	51.1	25.0	51.1	51.1	25.0	51.1	51.1	25.0	51.1	51.1	25.0
PN9220E	0.2-1.0	3.0	51.1	51.1	25.0	51.1	51.1	25.0	51.1	51.1	25.0	51.1	38.0	25.0	65.4	5.7	25.0	33.8		25.0
PN9220E	0.4-1.2	3.0	51.1	51.1	25.0	51.1	51.1	25.0	51.1	51.1	25.0	51.1	51.1	25.0	51.1	51.1	25.0	51.1	51.1	17.3
PN9226E	1.0-2.0	4.0	51.1	51.1	25.0	51.1	51.1	25.0	51.1	51.1	25.0	51.1	51.1	25.0	51.1	51.1	25.0	51.1	51.1	25.0
PN9223E	2.0-4.0	6.0	51.1	51.1	25.0	51.1	51.1	25.0	51.1	51.1	25.0	51.1	51.1	25.0	51.1	51.1	25.0	51.1	51.1	25.0
PN9320E	0.2-1.0	2.0	51.1	51.1	25.0	51.1	51.1	25.0	51.1	51.1	25.0	51.1	51.1	25.0	51.1	51.1	25.0	51.1	51.1	25.0
PN9320E	0.4-1.2	2.0	51.1	51.1	25.0	51.1	51.1	25.0	51.1	51.1	25.0	51.1	51.1	25.0	51.1	51.1	25.0	51.1	51.1	25.0

Actuator	Spring range bar	Cage Type	Standard Cage (S)															Low Noise Cage (P1-A1)		
		Valve size	DN15-25 (½"-1")																	
		Kvs (Cv)	4.0 (4.6)			4.9-6.3 (5.7-7.3)			7.2 (8.3)			10 (12)			11 (12.7)			2.5-4-6.3-10 (2.9-4.6-7.3-12)		
		Maximum pressure (bar g)	N-P	H	D	N-P	H	D	N-P	H	D	N-P	H	D	N-P	H	D	N-P	H	D
PN9126E	1.0-2.0	6.0	42.7	16.2	25.0	17.8	2.9	11.3	11.6		6.5	7.4		3.2	4.2		0.8	4.2		0.8
PN9123E	2.0-4.0	6.0	51.1	51.1	25.0	51.1	51.1	25.0	49.3	37.5	25.0	37.9	28.4	25.0	29.0	21.3	25.0	29.0	21.3	25.0
PN9220E	0.2-1.0	3.0	17.9		6.5	3.8			0.6											
PN9220E	0.4-1.2	3.0	51.1	51.1	25.0	37.7	22.7	25.0	27.3	15.5	25.0	20.1	10.6	16.0	14.5	6.8	11.2	14.5	6.8	11.2
PN9226E	1.0-2.0	4.0	51.1	51.1	25.0	51.1	51.1	25.0	51.1	51.1	25.0	51.1	51.1	25.0	51.1	51.1	25.0	51.1	51.1	25.0
PN9223E	2.0-4.0	6.0	51.1	51.1	25.0	51.1	51.1	25.0	51.1	51.1	25.0	51.1	51.1	25.0	51.1	51.1	25.0	51.1	51.1	25.0
PN9320E	0.2-1.0	2.0	51.1	49.8	25.0	36.7	21.8	25.0	26.5	14.7	25.0	19.5	9.9	15.3	14.0	6.3	10.7	14.0	6.3	10.7
PN9320E	0.4-1.2	2.0	51.1	51.1	25.0	51.1	51.1	25.0	51.1	51.1	25.0	51.1	51.1	25.0	48.6	40.9	25.0	48.6	40.9	25.0

SHOPVALVES
GLOBAL VALVE SOLUTIONS | 阀门易购

SHOPVALVES
GLOBAL VALVE SOLUTIONS | 阀门易购

PN9000R
- Maximum differential pressures for Class IV shut-off
- Hard Facing (W)
- Spira-trol
- DN15 - 25 (½" - 1")
- Flow under

Actuator	Spring range bar	Cage Type	Standard Cage (S)																	
		Valve size	DN15-25 (½"-1")																	
		Kvs (Cv)	0.01-0.07 (0.012-0.081)			0.1-0.2 (0.12-0.23)			0.5 (0.58)			1.0 (1.2)			1.6 (1.8)			2.5 (2.9)		
		Maximum pressure (bar g)	N-P	H	D	N-P	H	D	N-P	H	D	N-P	H	D	N-P	H	D	N-P	H	D
PN9120R	0.2-1.0	6.0	51.1	51.1	25.0	51.1	51.1	25.0	51.1	51.1	25.0	51.1	51.1	25.0	51.1	51.1	25.0	51.1	51.1	25.0
PN9120R	0.4-1.2	6.0	51.1	51.1	25.0	51.1	51.1	25.0	51.1	51.1	25.0	51.1	51.1	25.0	51.1	51.1	25.0	51.1	51.1	25.0
PN9126R	1.0-2.0	6.0	51.1	51.1	25.0	51.1	51.1	25.0	51.1	51.1	25.0	51.1	51.1	25.0	51.1	51.1	25.0	51.1	51.1	25.0
PN9123R	2.0-4.0	6.0	51.1	51.1	25.0	51.1	51.1	25.0	51.1	51.1	25.0	51.1	51.1	25.0	51.1	51.1	25.0	51.1	51.1	25.0
PN9220R	0.2-1.0	6.0	51.1	51.1	25.0	51.1	51.1	25.0	51.1	51.1	25.0	51.1	51.1	25.0	51.1	51.1	25.0	51.1	51.1	25.0
PN9220R	0.4-1.2	6.0	51.1	51.1	25.0	51.1	51.1	25.0	51.1	51.1	25.0	51.1	51.1	25.0	51.1	51.1	25.0	51.1	51.1	25.0
PN9226R	1.0-2.0	6.0	51.1	51.1	25.0	51.1	51.1	25.0	51.1	51.1	25.0	51.1	51.1	25.0	51.1	51.1	25.0	51.1	51.1	25.0

Actuator	Spring range bar	Cage Type	Standard Cage (S)															Low Noise Cage (P1-A1)		
		Valve size	DN15-25 (½"-1")																	
		Kvs (Cv)	4.0 (4.6)			4.9-6.3 (5.7-7.3)			7.2 (8.3)			10 (12)			11 (12.7)			2.5-4-6.3-10 (2.9-4.6-7.3-12)		
		Maximum pressure (bar g)	N-P	H	D	N-P	H	D	N-P	H	D	N-P	H	D	N-P	H	D	N-P	H	D
PN9120R	0.2-1.0	6.0	51.1	51.1	25.0	51.1	51.1	25.0	51.1	51.1	25.0	51.1	51.1	25.0	51.1	51.1	25.0	51.1	51.1	25.0
PN9120R	0.4-1.2	6.0	51.1	51.1	25.0	51.1	51.1	25.0	51.1	51.1	25.0	51.1	51.1	25.0	51.1	51.1	25.0	51.1	51.1	25.0
PN9126R	1.0-2.0	6.0	51.1	51.1	25.0	51.1	51.1	25.0	51.1	51.1	25.0	51.1	51.1	25.0	51.1	51.1	25.0	51.1	51.1	25.0
PN9123R	2.0-4.0	6.0	51.1	51.1	25.0	51.1	50.6	25.0	49.3	37.5	25.0	37.9	28.4	25.0	29.0	21.3	25.0	29.0	21.3	25.0
PN9220R	0.2-1.0	6.0	51.1	51.1	25.0	51.1	51.1	25.0	51.1	51.1	25.0	51.1	51.1	25.0	51.1	51.1	25.0	51.1	51.1	25.0
PN9220R	0.4-1.2	6.0	51.1	51.1	25.0	51.1	51.1	25.0	51.1	51.1	25.0	51.1	51.1	25.0	51.1	51.1	25.0	51.1	51.1	25.0
PN9226R	1.0-2.0	6.0	51.1	51.1	25.0	51.1	51.1	25.0	51.1	51.1	25.0	51.1	51.1	25.0	51.1	51.1	25.0	51.1	51.1	25.0

SHOPVALVES
GLOBAL VALVE SOLUTIONS | 阀门易购

SHOPVALVES
GLOBAL VALVE SOLUTIONS | 阀门易购

PN9000E
- Maximum differential pressures for Class IV shut-off
- Hard Facing (W)
- Spira-trol
- DN32 - 50 (1¼" - 2")
- Flow under

Actuator	Spring range bar	Cage Type	Standard Cage (S)																	
		Valve size	DN32-50 (1¼"-2")																	
		Kvs (Cv)	4.0 (4.6)			6.3 (7.3)			10 (12)			16 (18)			17.5 - 18 (20.2-21)			25 (29)		
		Maximum pressure (bar g)	N-P	H	D	N-P	H	D	N-P	H	D	N-P	H	D	N-P	H	D	N-P	H	D
PN9126E	1.0-2.0	6.0	40.8	15.1	25.0	17.8	2.9	11.3	7.4		3.2	4.4		1.0	1.5					
PN9123E	2.0-4.0	6.0	51.1	51.1	25.0	51.1	50.6	25.0	37.9	28.4	25.0	29.7	21.8	16.0	21.1	15.0	18.4	8.3	5.0	6.8
PN9220E	0.2-1.0	3.0	16.8		5.7	3.8														
PN9220E	0.4-1.2	3.0	51.1	49.3	25.0	37.7	22.7	25.0	20.1	10.6	16.0	15.0	7.1	11.5	9.7	3.6	7.0	2.1		0.7
PN9226E	1.0-2.0	3.0	51.1	51.1	25.0	51.1	51.1	25.0	51.1	51.1	25.0	51.1	51.1	16.0	51.1	45.1	25.0	24.6	21.3	23.2
PN9223E	2.0-4.0	6.0	51.1	51.1	25.0	51.1	51.1	25.0	51.1	51.1	25.0	51.1	51.1	16.0	51.1	51.1	25.0	51.1	51.1	25.0
PN9320E	0.2-1.0	2.0	51.1	47.6	25.0	36.7	21.8	25.0	19.5	9.9	15.3	14.4	6.5	11.0	9.3	3.1	6.6	1.9		0.5
PN9320E	0.4-1.2	2.0	51.1	51.1	25.0	51.1	51.1	25.0	51.1	51.1	25.0	49.7	41.8	16.0	36.6	30.4	25.0	16.7	13.3	15.2

Actuator	Spring range bar	Cage Type	Standard Cage (S)						Low Noise Cage (P1-P2-P3-A1-A2)		
		Valve size	DN32-50 (1¼"-2")								
		Kvs (Cv)	31-36 (36-42)			46-50 (53-58)			All Kvs		
		Maximum pressure (bar g)	N-P	H	D	N-P	H	D	N-P	H	D
PN9123E	2.0-4.0	6.0	5.5	2.9	4.4	2.6	0.7	1.7	2.6	0.7	1.7
PN9220E	0.4-1.2	3.0	0.6								
PN9226E	1.0-2.0	4.0	18.6	15.9	17.4	11.9	10.0	11.0	11.9	10.0	11.0
PN9223E	2.0-4.0	6.0	48.6	45.9	25.0	33.2	31.4	25.0	33.2	31.4	25.0
PN9320E	0.2-1.0	2.0	0.4								
PN9320E	0.4-1.2	2.0	12.2	9.6	11.1	7.3	5.4	6.5	7.3	5.4	6.5

SHOPVALVES
GLOBAL VALVE SOLUTIONS | 阀门易购

SHOPVALVES
GLOBAL VALVE SOLUTIONS | 阀门易购

PN9000R
- Maximum differential pressures for Class IV shut-off
- Hard Facing (W)
- Spira-trol
- DN32 - 50 (1¼" - 2")
- Flow under

Actuator	Spring range bar	Cage Type	Standard Cage (S)																	
		Valve size	DN32-50 (1¼"-2")																	
		Kvs (Cv)	4.0 (4.6)			6.3 (7.3)			10 (12)			16 (18)			17.5 - 18 (20.2-21)			25 (29)		
		Maximum pressure (bar g)	N-P	H	D	N-P	H	D	N-P	H	D	N-P	H	D	N-P	H	D	N-P	H	D
PN9120R	0.2-1.0	6.0	51.1	51.1	25.0	51.1	51.1	25.0	51.1	51.1	25.0	51.1	51.1	25.0	51.1	51.1	25.0	40.0	36.7	25.0
PN9120R	0.4-1.2	6.0	51.1	51.1	25.0	51.1	51.1	25.0	51.1	51.1	25.0	51.1	51.1	25.0	51.1	51.1	25.0	37.9	34.6	25.0
PN9126R	1.0-2.0	6.0	51.1	51.1	25.0	51.1	51.1	25.0	51.1	51.1	25.0	51.1	51.1	25.0	51.1	51.1	25.0	29.4	26.1	25.0
PN9123R	2.0-4.0	6.0	51.1	51.1	25.0	51.1	50.6	25.0	37.9	28.4	25.0	29.7	21.8	25.0	21.1	15.0	18.4	8.3	5.0	6.8
PN9220R	0.2-1.0	6.0	51.1	51.1	25.0	51.1	51.1	25.0	51.1	51.1	25.0	51.1	51.1	25.0	51.1	51.1	25.0	51.1	51.1	25.0
PN9220R	0.4-1.2	6.0	51.1	51.1	25.0	51.1	51.1	25.0	51.1	51.1	25.0	51.1	51.1	25.0	51.1	51.1	25.0	51.1	51.1	25.0
PN9226R	1.0-2.0	6.0	51.1	51.1	25.0	51.1	51.1	25.0	51.1	51.1	25.0	51.1	51.1	25.0	51.1	51.1	25.0	51.1	51.1	25.0
PN9223R	2.0-4.0	6.0	51.1	51.1	25.0	51.1	51.1	25.0	51.1	51.1	25.0	51.1	51.1	25.0	51.1	51.1	25.0	51.1	51.1	25.0
PN9320R	0.2-1.0	2.7	51.1	51.1	25.0	51.1	51.1	25.0	51.1	51.1	25.0	51.1	51.1	25.0	51.1	51.1	25.0	51.1	51.1	25.0
PN9320R	0.4-1.2	2.7	51.1	51.1	25.0	51.1	51.1	25.0	51.1	51.1	25.0	51.1	51.1	25.0	51.1	51.1	25.0	51.1	51.1	25.0

Actuator	Spring range bar	Cage Type	Standard Cage (S)						Low Noise Cage (P1-P2-P3-A1-A2)		
		Valve size	DN32-50 (1¼"-2")								
		Kvs (Cv)	31-36 (36-42)			46-50 (53-58)			All Kvs		
		Maximum pressure (bar g)	N-P	H	D	N-P	H	D	N-P	H	D
PN9120R	0.2-1.0	6.0	30.9	28.3	25.0	20.7	18.8	19.8	20.7	18.8	19.8
PN9120R	0.4-1.2	6.0	29.2	26.6	25.0	19.5	17.6	18.6	19.5	17.6	18.6
PN9126R	1.0-2.0	6.0	22.5	19.8	21.3	14.6	12.7	13.8	14.6	12.7	13.8
PN9123R	2.0-4.0	6.0	5.5	2.9	4.4	2.6	0.7	1.7	2.6	0.7	1.7
PN9220R	0.2-1.0	6.0	51.1	51.1	25.0	51.1	51.1	25.0	51.1	51.1	25.0
PN9220R	0.4-1.2	6.0	51.1	51.1	25.0	51.1	51.1	25.0	51.1	51.1	25.0
PN9226R	1.0-2.0	6.0	51.1	51.1	25	51.1	51.1	25.0	51.1	51.1	25.0
PN9223R	2.0-4.0	6.0	48.6	45.9	25	33.2	31.4	25.0	33.2	31.4	25.0
PN9320R	0.2-1.0	2.7	51.1	51.1	25	51.1	51.1	25.0	51.1	51.1	25.0
PN9320R	0.4-1.2	2.7	51.1	51.1	25	51.1	51.1	25.0	51.1	51.1	25.0

SHOPVALVES
GLOBAL VALVE SOLUTIONS | 阀门易购

SHOPVALVES
GLOBAL VALVE SOLUTIONS | 阀门易购

PN9000E
- Maximum differential pressures for Class IV shut-off
- Hard Facing (W)
- Spira-trol
- DN65 - 100 (2½" - 4")
- Flow under

Actuator	Spring range bar	Cage Type	Standard Cage (S)																	
		Valve size	DN65-100 (2½-4")																	
		Kvs (Cv)	16 (18)			25 (29)			36 (42)			63-73-90 (73-85-104)			100-117 (116-135)			160-180 (185-208)		
		Maximum pressure (bar g)	N-P	H	D	N-P	H	D	N-P	H	D	N-P	H	D	N-P	H	D	N-P	H	D
PN9230E	0.4-1.2	3.0	8.6		7.0															
PN9236E	1.0-2.0	4.0	50.2	39.8	25.0	18.1	13.6	17.4	11.5	8.3	11.0	4.8	3.0	4.5	2.0	0.9	1.8	0.4		0.3
PN9233E	2.0-4.0	6.0	51.1	51.1	25.0	48.1	43.6	25.0	32.9	29.7	25.0	16.9	15.0	16.6	9.7	8.6	9.5	5.2	4.5	5.1
PN9330E	0.2-1.0	2.0	8.2		6.6															
PN9330E	0.4-1.2	2.0	35.5	25.2	25.0	11.8	7.3	11.1	7.0	3.8	6.5	2.3	0.5	2.0	0.4		0.2			
PN9337E	2.5-3.5	4.0	51.1	51.1	25.0	51.1	51.1	25.0	51.1	51.1	25.0	51.1	51.1	25.0	32.2	31.1	25.0	19.2	18.5	19.1

Actuator	Spring range bar	Cage Type	Low Noise Cage (P1-A1-P2-A2-P3)					
		Valve size	DN65-80 (2½-3")			DN100 (4")		
		Kvs (Cv)	All Kvs			All Kvs		
		Maximum pressure (bar g)	N-P	H	D	N-P	H	D
PN9236E	1.0-2.0	4.0	2.0	0.9	1.8	0.4		0.3
PN9233E	2.0-4.0	6.0	9.7	8.6	9.5	5.2	4.5	5.1
PN9330E	0.2-1.0	2.0						
PN9330E	0.4-1.2	2.0	0.4		0.2			
PN9337E	2.5-3.5	4.0	32.2	31.1	25.0	19.2	18.5	19.1

SHOPVALVES
GLOBAL VALVE SOLUTIONS | 阀门易购

SHOPVALVES
GLOBAL VALVE SOLUTIONS | 阀门易购

PN9000R
- Maximum differential pressures for Class IV shut-off
- Hard Facing (W)
- Spira-trol
- DN65 - 100 (2½" - 4")
- Flow under

Actuator	Spring range bar	Cage Type	Standard Cage (S)																	
		Valve size	DN65-100 (2½-4")																	
		Kvs (Cv)	16 (18)			25 (29)			36 (42)			63-73-90 (73-85-104)			100-117 (116-135)			160-180 (185-208)		
		Maximum pressure (bar g)	N-P	H	D	N-P	H	D	N-P	H	D	N-P	H	D	N-P	H	D	N-P	H	D
PN9230R	0.2-1.0	6.0	51.1	51.1	25.0	51.1	51.1	25.0	51.1	51.1	25.0	51.1	51.1	25.0	32.8	31.7	25.0	19.6	18.8	19.4
PN9230R	0.4-1.2	6.0	51.1	51.1	25.0	51.1	51.1	25.0	51.1	51.1	25.0	51.1	48.7	25.0	31.3	30.1	25.0	18.6	17.9	18.5
PN9236R	1.0-2.0	6.0	51.1	51.1	25.0	51.1	51.1	25.0	51.1	51.1	25.0	40.9	39.1	25.0	25.1	24.0	24.9	14.8	14.0	14.7
PN9233R	2.0-4.0	6.0	51.1	51.1	25.0	48.1	43.6	25.0	32.9	29.7	25.0	16.9	15.0	16.6	9.7	8.6	9.5	5.2	4.5	5.1
PN9330R	0.2-1.0	2.7	51.1	51.1	25.0	51.1	51.1	25.0	51.1	51.1	25.0	33.1	31.3	25.0	20.1	19.0	19.9	11.6	10.9	11.5
PN9330R	0.4-1.2	2.7	51.1	51.1	25.0	51.1	51.1	25.0	51.1	51.1	25.0	28.3	26.5	25.0	17.1	15.9	16.9	9.8	9.0	9.6

Actuator	Spring range bar	Cage Type	Low Noise Cage (P1-A1-P2-A2-P3)					
		Valve size	DN65-80 (2½-3")			DN100 (4")		
		Kvs (Cv)	All Kvs			All Kvs		
		Maximum pressure (bar g)	N-P	H	D	N-P	H	D
PN9230R	0.2-1.0	6.0	32.8	31.7	25.0	19.6	18.8	19.4
PN9230R	0.4-1.2	6.0	31.3	30.1	25.0	18.6	17.9	18.5
PN9236R	1.0-2.0	6.0	25.1	24.0	24.9	14.8	14.0	14.7
PN9233R	2.0-4.0	6.0	9.7	8.6	9.5	5.2	4.5	5.1
PN9330R	0.2-1.0	2.7	20.1	19.0	19.9	11.6	10.9	11.5
PN9330R	0.4-1.2	2.7	17.1	15.9	16.9	9.8	9.0	9.6

SHOPVALVES
GLOBAL VALVE SOLUTIONS | 阀门易购

SHOPVALVES
GLOBAL VALVE SOLUTIONS | 阀门易购

PN9000 series selection guide:

Before making your PN9000 series selection please reference pages 6 to 26 - Sizing data

How to use the sizing data:
The tables supply guidance as to the sizing of the PN9000 when it is used on a SPIRA-TROL control valve.

Two conditions are illustrated in tabular form:
Class IV shut-off - Providing shut-off of the valve to the requirements of BS 5793-4 (IEC 60534-4) class IV.
Class VI shut-off - Providing shut-off of the valve to the requirements of BS 5793-4 (IEC 60534-4) class VI.

To select a suitable actuator:

- Identify the column containing the valve and gland material selected.
- Identify the maximum operating pressure condition, including any transient pressures likely to occur, within the selected column.
- Read back to the left hand side of the table to identify the suitable actuator for the application.

For conditions outside of those illustrated please contact Spirax Sarco.

Type	**PN**	=	Polyester powder coated (standard)	**PN**
Series	**9**	=	9000 series	**9**
Actuator size	**1**	=	100 cm**2**	**3**
	2	=	340 cm**2**	
	3	=	670 cm**2**	
Valve travel	**2**	=	20 mm	**3**
	3	=	30 mm	
Spring rating	**0**	=	0.2 to 1.0 bar (option for 0.4 to 1.2 bar)	**7**
	3	=	2.0 to 4.0 bar	
	6	=	1.0 to 2.0 bar	
	7	=	2.5 to 3.5 bar (PN933_ series only	
Spring action	**E**	=	Spring-extend	**E**
	R	=	Spring-retract	
Yoke type (DN15 - DN50)	**Blank**	=	Spira-trol™ K and L Series (M34)	
Manual override	**H**	=	Handwheel (optional)	
Fast Speed	**F**	=	version with the higher capacity of speed (possible only PN92_ and PN93_)	
Diaphragm	**Blank**	=	Standard	
	T	=	High Temperature EPDM diaphragm	

How to order / selection example:

1 off Spirax Sarco PN9337E pneumatic actuator.

SHOPVALVES
GLOBAL VALVE SOLUTIONS | 阀门易购

SHOPVALVES
GLOBAL VALVE SOLUTIONS | 阀门易购

Spare parts

The only spares available are clearly indicated below and are common for both spring-extend and spring-retract versions.

Available spares

Stem seal kit	**17, 18, 30**
Diaphragm kit	**4, 9**
Travel indicator kit	**15, 19, 20**
Spring kit	**5**
Linkage kit (Spira-trol™ valves)	**10, 13, 26**

How to order spares

Always order spares by using the description given in the column headed 'Available spares' and state the actuator model.
Example: 1 - Stem seal kit for a PN9123E pneumatic actuator.

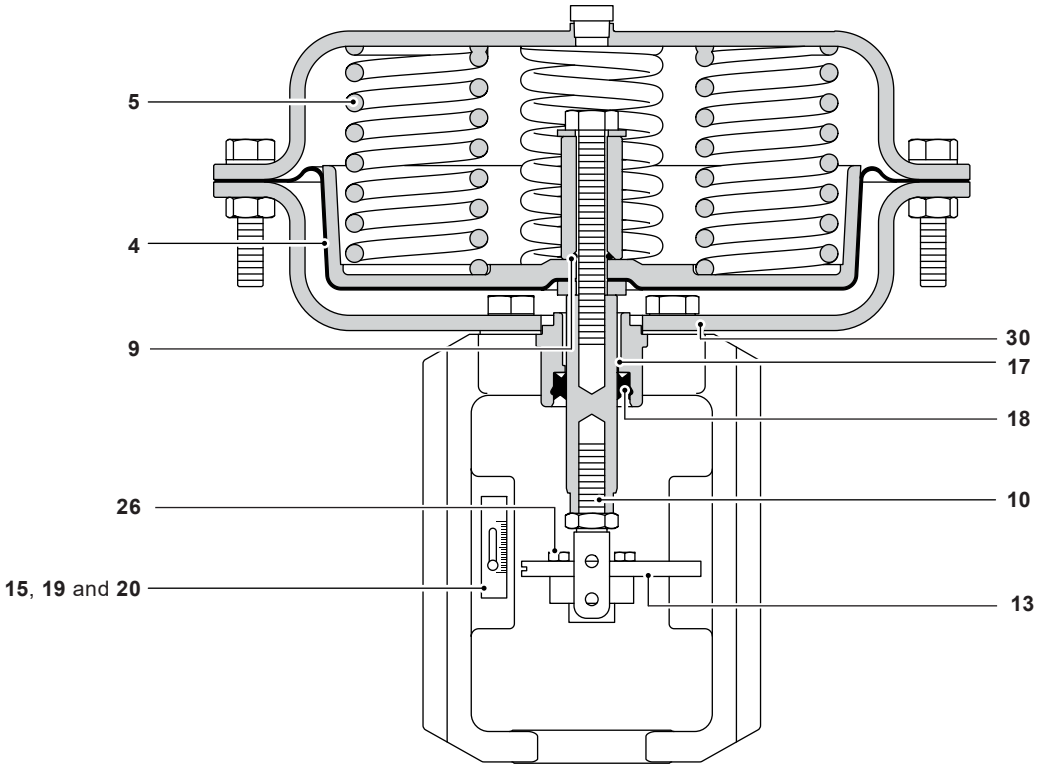

SHOPVALVES
GLOBAL VALVE SOLUTIONS | 阀门易购