SP7-10, SP7-11 and SP7-12
Digital positioner
Quick start guide

1. Safety information

2. Installation

3. Approvals

4. Declaration of conformity

© Copyright 2025

1. Safety information

Safe operation of these products can only be guaranteed if they are properly installed, commissioned, used and maintained by qualified personnel (see SP7-10, SP7-11 and SP7-12 Installation manual IM-P706-02) in compliance with the operating instructions. General installation and safety instructions for pipeline and plant construction, as well as the proper use of tools and safety equipment must also be complied with.

Throughout the document SP7-1* is written where the information is relevant to all versions; the SP7-10, SP7-11 and SP7-12. Where the information is specific it will be referenced as the version appropriate

Explosion proof warning

Please ensure the unit is being used and installed in conformity with local, regional, and national explosion proof regulations.

- **Refer to “Approvals”**
- **The "Local communication interface (LCI)" of the SP7-1* may only be used outside of the explosion hazardous area with Um ≤ 30 V DC.**
- **The positioner type SP7-1* may only be operated as a source of auxiliary energy with gases of the group IIA and the temperature class T1 in outdoor applications or inside of buildings with sufficient ventilation.**
- **The fed gas must be free of air and oxygen insofar as no explosive atmosphere can occur. The exhaust gas must always let outwards.**
- **The equipment may only be used as a II 2 D type device in areas where the level of mechanical hazard is ‘low’.**
- **Cable entries that meet the requirements of EN 61241-11 for Category II 2 D as well as the ambient temperature range must be used.**
- **Prevent electrostatic charging due to propagating brush discharge when the equipment is used for applications involving combustible dust.**

2. Installation

Operators must wear ear protection when commissioning the positioner

2.1 Measuring and operating ranges of the positioner

Operating range for linear actuators:
The operating range for linear actuators is ±45° symmetrically to the longitudinal axis. The usable span within the operating range is at least 25° (recommended figure 40°). The usable span does not necessarily need to run symmetrically to the longitudinal axis.

Operating range of rotary actuators: The usable span is 90°, which must be entirely within the measuring range, but does not necessarily need to run symmetrically to the longitudinal axis.

Note
During installation make sure that the actuator travel or rotation angle for position feedback is implemented correctly.

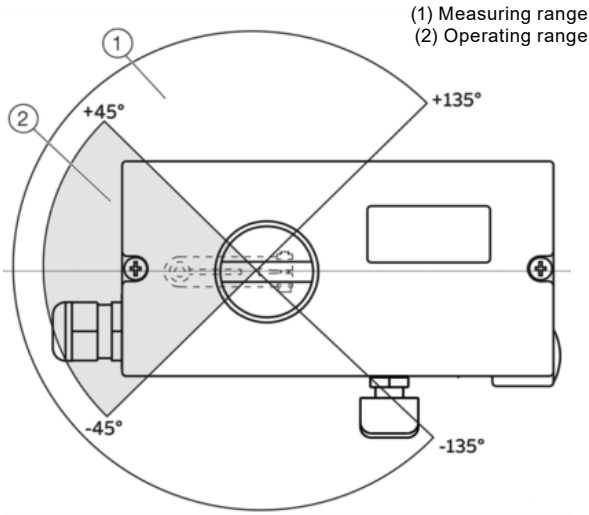

Fig. 1

2.2 Attaching a follower guide to the actuator

1. Tighten the screws so that they are hand tight
2. Attach the follower guide (1) and clamp plates (2) with screws (4) and spring washers (3) to the actuator stem.

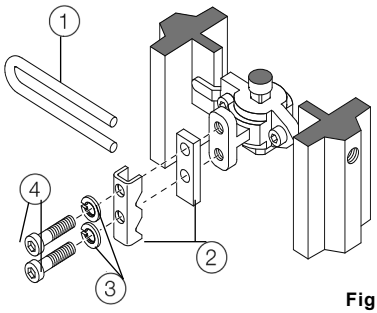

Fig. 2

2.3 Mounting lever and bracket on the positioner

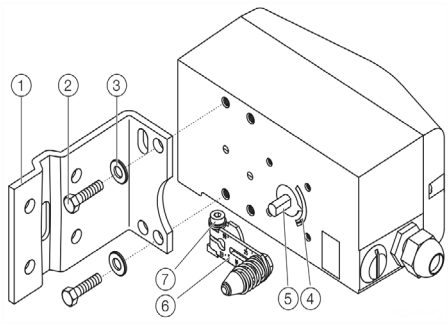

Fig. 3

Note
Positioner mounting threaded holes and bracket holes, depend on the actuator type used. Select to suit, to ensure the follower pin has free movement in the follower guide over entire valve travel.

1. Attach the lever (6) to the feedback shaft (5) of the positioner (can only be mounted in one position due to the cut shape of the feedback shaft).
2. Using the arrow marks (4), check whether the lever moves within the operating range (between the arrows).
3. Hand-tighten the screw (7) on the lever.
4. Hold the prepared positioner (with the mount bracket 1 still loose) on the actuator so that the follower pin for the lever enters the follower guide to determine which tap holes on the positioner must be used for the mount bracket.
5. Secure the mount bracket 1 with screws 2 and washers 3 using the relevant tap holes on the positioner housing.

Tighten the screws as evenly as possible to ensure subsequent linearity.
Align the mount bracket in the oblong hole to ensure that the operating range is symmetrical.
Set the valve mid stroke and align the lever horizontal (item 6 fig. 3).
Then tighten mounting bolt (item 4 fig. 4) (lever moves between the arrow marks item 4 fig. 3).

2.4 Mounting on a yoke

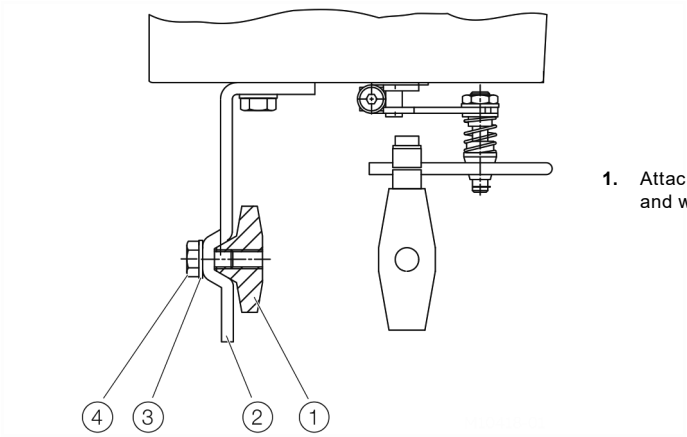

Fig. 4

1. Attach the mount bracket (2) with screw (4) and washer (3) to the yoke (1).

2.5 Mounting on a column

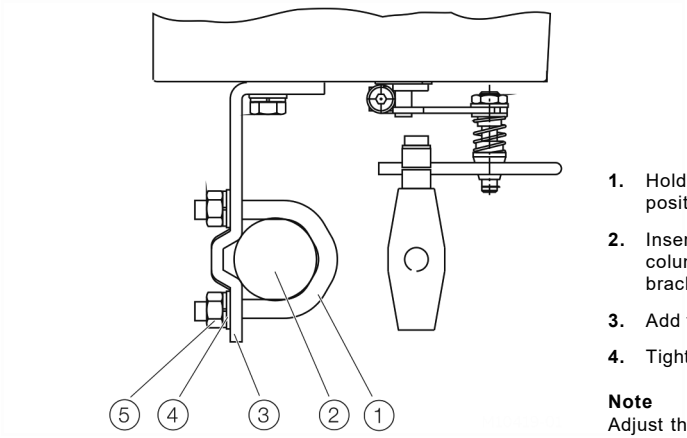

Fig. 5

1. Hold the mount bracket (3) in the proper position on the column (2).
2. Insert the U-bolts (1) from the inside of the column (2) through the holes of the mount bracket.
3. Add the washers (4) and nuts (5).
4. Tighten the nuts so that they are hand-tight.

Note
Adjust the height of the positioner on the cast iron yoke or columnar yoke until the lever is horizontal (based on a visual check) at half stroke of the valve.

2.6 Positioner linkage

The scale on the lever indicates the link points for the various stroke ranges of the valve.

Move the bolt with the follower pin in the oblong hole of the lever to adjust the stroke range of the valve to the working range for the position sensor.

Moving the link point inwards increases the rotation angle of the sensor. Moving the link point outwards reduces the rotation angle of the sensor.

Adjust the actuator stroke to make use of as large an angle of rotation as possible (symmetrical around the center position) on the position sensor.

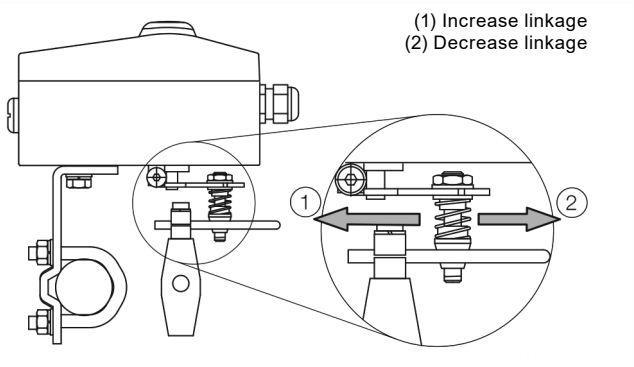

Fig. 6

Recommended range for linear actuators: −28 to 28°

Minimum angle: 25°

Note After mounting, check whether the positioner is operating within the measuring range.

2.7 Position of the actuator bolt

The actuator bolt for moving the potentiometer lever can be mounted permanently on the lever itself or on the valve stem. Depending on the mounting method, when the valve moves the actuator bolt performs either a circular or a linear movement with reference to the center of rotation of the potentiometer lever. Select the chosen bolt position in the HMI menu in order to ensure optimum linearization. The default setting is actuator bolt on lever

2.8 Actuator bolts on the lever (rear view)

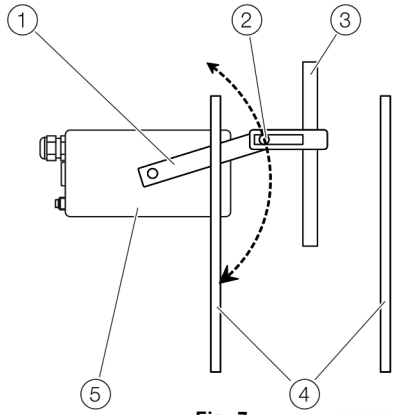

Fig. 7

1	Potentiometer lever
2	Actuator bolts
3	Valve stem
4	Valve yoke
5	Positioner

2.9 Actuator bolts on the Valve (rear view)

1	Potentiometer lever
2	Actuator bolts
3	Valve stem
4	Valve yoke
5	Positioner

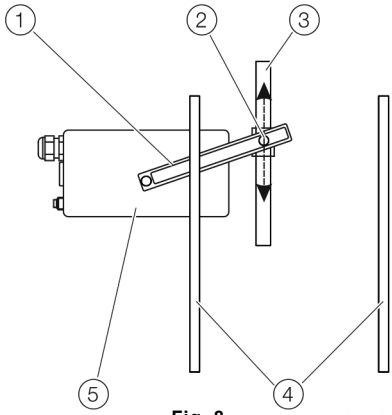

Fig. 8

2.10 Mounting the adapter on the positioner

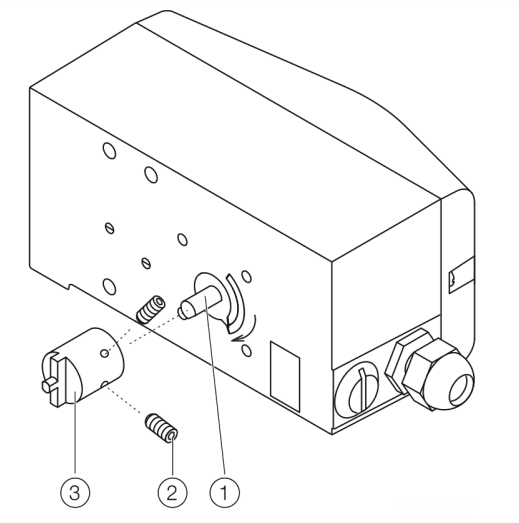

Fig. 9

1. Determine the mounting position (parallel to actuator or at 90° angle).
2. Calculate the rotational direction of the actuator (right or left).
3. Move the part-turn actuator into the home position.
4. Pre-adjust feedback shaft.

To make sure that the positioner runs within the operating range (refer to measuring and operating ranges of the positioner on page 4), the mounting position as well as the basic position and rotation direction of the actuator must be considered when determining the adapter position on axis 1. For this purpose, the feedback shaft can be adjusted manually so that the adapter 3 can be attached in the correct position.

5. Place the adapter in the proper position on the feedback shaft and fasten with threaded pins 2. One of the threaded pins must be locked in place on the flat side of the feedback shaft.

2.11 Screwing the attachment bracket onto the positioner

(1) Attachment bracket

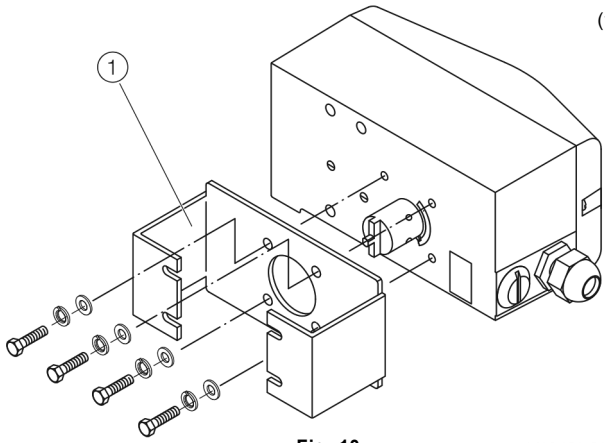

Fig. 10

2.12 Screwing the positioner onto the actuator

Note
After mounting, check whether the operating range of the actuator matches the measuring range of the positioner, refer to measuring and operating ranges of the positioner on page 4.

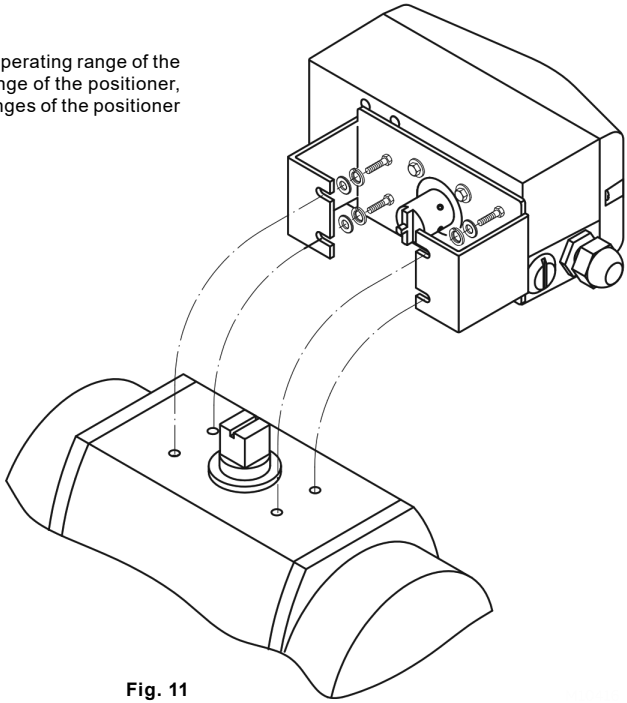

Fig. 11

2.13 Electrical connections

Positioner SP7-10 Control Unit Electrical Connection

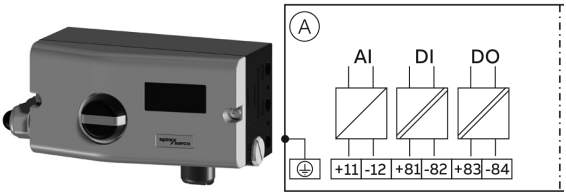

A Basic device

Terminal	Function/comments
+11/−12	Analog input
+81/−82	Binary input DI
+83/−84	Binary output DO2

2.13.1 Binary output

Only for devices with HART Communication. Output configurable as alarm output by software.
Binary output DO

Terminals	+83/−84
Supply voltage (Control circuit in accordance with DIN 9234/NAMUR)	5 to 11 Vdc
Output ‘logical 0’	> 0.35 mA to < 1.2 mA
Output ‘logical 1’	> 2.1 mA
Direction of action	Configurable ‘logical 0’ or ‘logical 1’

2.14 Connection on the device

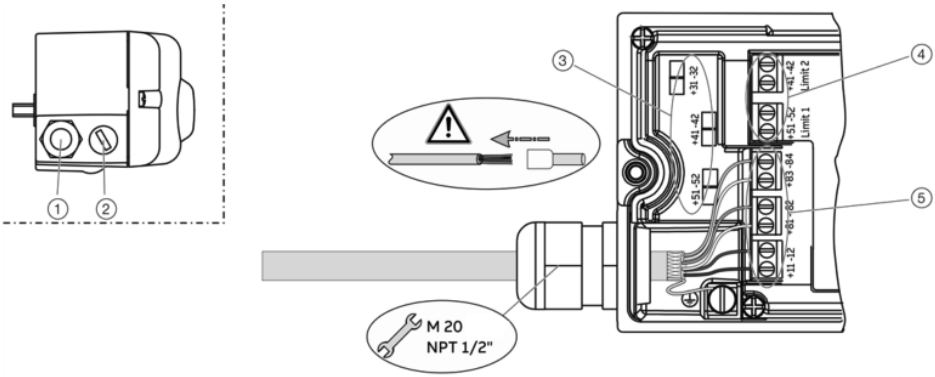

Fig. 12

1	Cable gland
2	Blind plug
3	Terminals for option modules
4	Terminal attachment kit for digital feedback
5	Terminals for basic unit

2 tap holes ½ 14 NPT or M20 × 1.5 are provided on the left side of the housing for cable entry in the housing. One of the tap holes is fitted with a cable gland, while the other tap hole has a blind plug.

Note
The connecting terminals are delivered closed and must be unscrewed before inserting the wire.

1. Strip the wires to approximately 6 mm (0.24 in).
2. Connect the wires to the connecting terminals in line with the connection diagram.

2.15 Pneumatic connections

Information on double acting actuators with spring-return mechanism

On double-acting actuators with spring-return mechanism, a pressure that significantly exceeds the supply air pressure value can be generated during operation by the springs in the chamber opposite the springs. This may damage the positioner or adversely affect control of the actuator.

To eliminate the possibility of this occurring, it is recommended to install a pressure compensation valve between the springless chamber and the supply air for these types of applications. It enables the increased pressure to be transferred back to the air inlet line.
The opening pressure of the check valve should be < 250 mbar (< 3.6 psi).

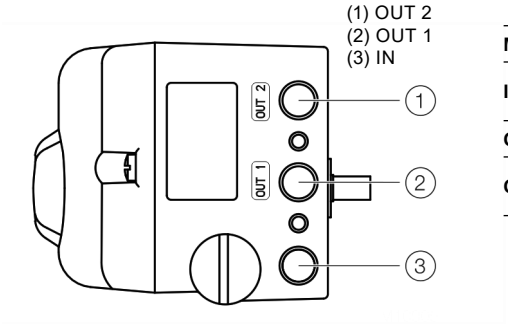

Marking	Pipe connection
IN	Supply air, pressure 1.4 to 6 bar (20 to 90 psi)
OUT1	Output pressure to the actuator
OUT2	Output pressure to the actuator (2). (Connection with double acting actuator)

Join the pipe connections according to the designation, observing the following points:

- All pneumatic piping connections are located on the right-hand side of the positioner. ¼ 18 NPT tap holes are provided for the pneumatic connections. The positioner is labeled according to the tap holes available.
- We recommend that you use a pipe with dimensions of 12 × 1.75 mm.
- The supply air pressure required to apply the actuating force must be adjusted in line with the output pressure in the actuator. The operating range of the positioner is between 1.4 to 6 bar (20 to 90 psi).

Instrument air supply*

Purity	Maximum particle size: 5 µm Maximum particle density: 5 mg/m^3
Oil content	Maximum concentration 1 mg/m^3
Pressure dew point	10 K below operating temperature
Supply pressure**	Standard design: 1.4 to 6 bar (20 to 90 psi)
Air consumption***	< 0.03 kg/h/0.015 scfm

* Free of oil, water and dust in accordance with DIN/ISO 8573-1. Pollution and oil content in accordance with Class 3:3:3

** Do not exceed the maximum output pressure of the actuator

*** Independent of supply pressure

2.16 Commissioning the positioner

1. Open the pneumatic power supply.
2. Power-up the electric power supply and feed in the set point signal 4 to 20 mA.
3. Checking mechanical mounting:
   - Press and hold MODE; in addition, press ARROW UP or ARROW DOWN until operating mode 1.3 (manual adjustment in the measuring range) is displayed. Release MODE.
   - Press ARROW UP or ARROW DOWN to move the actuator into the mechanical end position; check the end positions; rotational angle is displayed in degrees; for high-speed mode, press ARROW UP or ARROW DOWN simultaneously.

2.17 Recommended rotational angle range

Linear actuators	−28 to 28°
Rotary actuators	−57 to 57°
Minimum angle	25°

4. Perform standard automatic adjustment in accordance with standard automatic adjustment.

Commissioning of the positioner is now complete, and the device is ready for operation.

2.18 Standard automatic adjustment

Note: Standard Auto Adjust does not always result in optimum control conditions.

Standard automatic adjustment for linear actuators*
1. MODE Press and hold until ADJ_LIN is displayed.
2. MODE Press and hold until the countdown ends.
3. Release MODE; this starts Auto-adjust.

Standard automatic adjustment for rotary actuators*
1. ENTER Press and hold until ADJ_ROT is displayed.
2. ENTER Press and hold until the countdown ends.
3. Release ENTER; this starts Auto-adjust.

If Auto-adjust is successful, the parameters will be stored automatically and the positioner will revert to operating mode 1.1.

If an error occurs during Auto-adjust, the process will be terminated with an error message.

Perform the following steps if an error occurs:
1. Press and hold down operating button ARROW UP or ARROW DOWN for approximately three seconds. The unit will switch to the operating level, mode 1.3 (manual adjustment within the measuring range).
2. Check mechanical mounting in accordance with Mechanical mounting on page 14 and repeat the standard automatic adjustment.

* The zero position is determined automatically and saved during standard automatic adjustment, counter-clockwise (CTCLOCKW) for linear actuators and clockwise (CLOCKW) for rotary actuators.

3. Approvals

ATEX

Rating: ATEX II 2 G Ex ib IIC T6, T4…T1 Gb
Certification number: TÜV 21 ATEX 295206 X
Ambient temperature:
T6: −40°C < Ta < 40 °C
T4 ... T1: −40°C < Ta < 85 °C

IECEx

Rating: IECEx Ex ib IIC T6, T4…T1 Gb
Certification number: IECEx TUN 21.0019X
Ambient temperature:
T6: −40°C < Ta < 40 °C
T4 ... T1: −40°C < Ta < 85 °C

CCC/NEPSI

Rating: NEPSI EX ib IIC T4/T6 Gb
Certification number: GYJ22.1767X
Ambient temperature:
T4: -40 °C < Ta < 85 °C
T6: -40 °C < Ta < 40 °C

INMETRO

Rating: INMETRO Ex ib IIC T6, T4 ... T1 Gb
Certification number: TÜV 25.1034 X
Ambient temperature:
T6: -40 °C < T_{amb} < 40 °C
T4... T1: -40 °C < T_{amb} < 85 °C

4. Declaration of conformity

spiraxsarco.com

EN

EU DECLARATION OF CONFORMITY

Apparatus model/Product:	**Smart Positioners** **SP7-10** **SP7-11** **SP7-12**
Name and address of the manufacturer or his authorised representative:	**Spirax Sarco Ltd**, Runnings Road Cheltenham GL51 9NQ United Kingdom

This declaration of conformity is issued under the sole responsibility of the manufacturer.

The object of the declaration described above is in conformity with the relevant Union harmonisation legislation:

2014/30/EU	EMC Directive
2014/34/EU	ATEX Directive

References to the relevant harmonised standards used or references to the other technical specifications in relation to which conformity is declared:

EMC Directive	EN 61326-1:2013
ATEX Directive	EN IEC 60079-0:2018 EN 60079-11:2012

Where applicable, the notified body:

Notified Body	*number*	*Performed*	*Certificate*
Element Materials Technology Rotterdam B.V. Voorerf 18, 4824 GN Breda Netherlands	2812	*Issue of Quality Assurance Notification*	TRAC13QAN0002
TÜV NORD CERT GmbH Am TÜV 1, 30519 Hannover Germany	0044	*Issue of EC Type examination certificate*	TÜV 21 ATEX 295206 X

Additional information:

Ex II 2 G Ex ib IIC T6, T4 ... T1 Gb

Signed for and on behalf of:	Spirax Sarco Ltd,
(signature):	
(name, function):	M Sadler Head of Engineering Steam Business Development
(place and date of issue):	Cheltenham 2022-03-14

GNP237-EU-C/04 issue 1 (EN)