SHOPVALVES
GLOBAL VALVE SOLUTIONS | 阀门易购

SP7-10, SP7-11 and SP7-12
Smart positioner
Installation and Maintenance Instructions

Throughout the document SP7-1* is written where the information is relevant to all versions; the SP7-10, SP7-11 and SP7-12. Where the information is specific it will be referenced as the version appropriate.

1. Safety information
2. General product information
3. Installation
4. Commissioning
5. Operation
6. Troubleshooting
7. Maintenance
8. Approvals
9. Declaration of conformity

© Copyright 2025
SHOPVALVES
GLOBAL VALVE SOLUTIONS | 阀门易购

SHOPVALVES
GLOBAL VALVE SOLUTIONS | 阀门易购

Copyright © Spirax-Sarco Limited 2025

All rights reserved
Spirax-Sarco Limited grants the legal user of this product (or device) the right to use the Work(s) solely within the scope of the legitimate operation of the product (or device). No other right is granted under this licence. In particular and without prejudice to the generality of the foregoing, the Work(s) may not be used, sold, licensed, transferred, copied or reproduced in whole or in part or in any manner or form other than as expressly granted here without the prior written consent of Spirax-Sarco Limited.

Product return procedure

Please provide the following information with any equipment being returned:

1. Your name, Company name, address and telephone number, order number and invoice and return delivery address.
2. Description of equipment being returned.
3. Description of the fault.
4. If the equipment is being returned under warranty, please indicate:
   - i. Date of purchase
   - ii. Original order number
   - iii. Serial number

Please return all items to your local Spirax Sarco branch.
Please ensure all items are suitably packed for transit (preferably in the original cartons).

SHOPVALVES
GLOBAL VALVE SOLUTIONS | 阀门易购

SHOPVALVES
GLOBAL VALVE SOLUTIONS | 阀门易购

Contents

1. Safety information 5

2. General product information

2.1 Introduction 8

2.2 Operating principle

2.3 Label description

2.4 Principle of operation 10

3. Installation 12

3.1 Mechanical mounting

3.2 Electrical connections SP7-10 22

3.3 Electrical Connection SP7-11/12 24

3.4 Connection on device 30

3.5 Connection on device - SP7-10 Control Unit with SP7-1 Remote Sensor 32

3.6 Connection on device – SP7-10 Control Unit for remote position sensor 34

3.7 Pneumatic connections 36

4. Commissioning

4.1 Commissioning the positioner 38

4.2 Recommended rotational angle range

4.3 Operating modes 39

4.4 Standard automatic adjustment 40

4.5 Commissioning SP7-11/12 41

4.6 Setting the bus address 42

4.7 Request information 44

4.8 Operating modes 44

4.9 Jumper configuration 45

4.10 Standard automatic adjustment 46

4.11 Sample parameters 47

4.12 Setting the option modules 48

4.13 Setting the mechanical limit switch with proximity switches

4.14 Setting the mechanical limit switch with 24 V micro-switches 49

SHOPVALVES
GLOBAL VALVE SOLUTIONS | 阀门易购

SHOPVALVES
GLOBAL VALVE SOLUTIONS | 阀门易购

5. Operation 50

5.1 Parameterization of the device

5.2 SP7-10 HART Parameter Overview 52

5.3 SP7-11/12 Parameter Overview 57

6. Troubleshooting 60

6.1 Error codes SP7-10

6.2 Error Codes SP7-11/12 62

6.3 Alarm codes 63

6.4 Message codes 64

7. Maintenance

8. Approvals 65

9. Declaration of Conformity 66

SHOPVALVES
GLOBAL VALVE SOLUTIONS | 阀门易购

SHOPVALVES
GLOBAL VALVE SOLUTIONS | 阀门易购

1. Safety information

Safe operation of these products can only be guaranteed if they are properly installed, commissioned, used and maintained by qualified personnel (see Section 1.13) in compliance with the operating instructions. General installation and safety instructions for pipeline and plant construction, as well as the proper use of tools and safety equipment must also be complied with.

⚠	**WARNING: The maximum process fluid temperature must be suitable for use if the unit is to be used in any potential explosive atmosphere. For the device maintenance in a potentially explosive atmosphere, we recommend the usage of tools which do not produce and / or propagate sparks.**

1.1 Explosion proof warning

Please ensure the unit is being used and installed in conformity with local, regional, and national explosion proof regulations.

- **Refer to “8. Approvals”**
- **The "Local communication interface (LCI)" of the SP7-1* may only be used outside of the explosion hazardous area with Um ≤ 30 Vdc.**
- **The positioner type SP7-1* may only be operated as a source of auxiliary energy with gases of the group IIA and the temperature class T1 in outdoor applications or inside of buildings with sufficient ventilation.**
- **The fed gas must be free of air and oxygen insofar as no explosive atmosphere can occur. The exhaust gas must always let outwards.**
- **The equipment may only be used as a II 2 D type device in areas where the level of mechanical hazard is ‘low’.**
- **Cable entries that meet the requirements of EN 61241-11 for Category II 2 D as well as the ambient temperature range must be used.**
- **Prevent electrostatic charging due to propagating brush discharge when the equipment is used for applications involving combustible dust.**

1.2 Wiring

Every effort has been made during the design of the positioner to ensure the safety of the user, but the following precautions must be followed:

i) **Ensure correct installation. Safety may be compromised if the installation of the product is not carried out as specified in this manual.**

ii) **Wiring should be carried out in accordance with IEC 60364 or equivalent.**

iii) **Fuses should not be installed in the protective earth conductor. The integrity of the installation protective earth system must not be compromised by the disconnection or removal of other equipment.**

SHOPVALVES
GLOBAL VALVE SOLUTIONS | 阀门易购

SHOPVALVES
GLOBAL VALVE SOLUTIONS | 阀门易购

1.3 Intended use

Referring to the Installation and Maintenance Instructions, product markings and Technical Information Sheet, check that the product is suitable for the intended use / application.

1.4 Access

Ensure safe access and if necessary a safe working platform (suitably guarded)before attempting to work on the product. Arrange suitable lifting gear if required.

1.5 Lighting

Ensure adequate lighting, particularly where detailed or intricate work is required.

1.6 Hazardous liquids or gases in the pipeline

Consider what is in the pipeline or what may have been in the pipeline at some previous time. Consider: flammable materials, substances hazardous to health, extremes of temperature.

1.7 Hazardous environment around the product

Consider: lack of oxygen (e.g. tanks, pits), dangerous gases, extremes of temperature, hot surfaces, fire hazard (e.g. during welding), excessive noise, moving machinery.

1.8 The system

Consider the effect on the complete system of the work proposed. Will any proposed action (e.g. closing isolation valves, electrical isolation) put any other part of the system or any personnel at risk?
Dangers might include isolation of vents or protective devices or the rendering ineffective of controls or alarms. Ensure isolation valves are opened and closed progressively to avoid system shocks.

1.9 Pressure systems

Ensure that any pressure is isolated and safely vented to atmospheric pressure. Consider double isolation (double block and bleed) and the locking or labelling of closed valves. Do not assume that the system has depressurised even when the pressure gauge indicates zero.

1.10 Temperature

Allow time for temperature to normalise after isolation to avoid the danger of burns.

1.11 Tools and consumables

Before starting work ensure that you have suitable tools and / or consumables available. Use only genuine Spirax Sarco replacement parts.

Operators must wear ear protection when commissioning the positioner

SHOPVALVES
GLOBAL VALVE SOLUTIONS | 阀门易购

SHOPVALVES
GLOBAL VALVE SOLUTIONS | 阀门易购

1.12 Protective clothing

Consider whether you and / or others in the vicinity require any protective clothing to protect against the hazards of, for example, chemicals, high / low temperature, radiation, noise, falling objects, and dangers to eyes and face.

1.13 Permits to work

All work must be carried out or be supervised by a suitably competent person.Installation and operating personnel should be trained in the correct use of the product according to the Installation and Maintenance Instructions.
Where a formal 'permit to work' system is in force it must be complied with. Where there is no such system, it is recommended that a responsible person should know what work is going on and, where necessary, arrange to have an assistant whose primary responsibility is safety.
Post 'warning notices' if necessary.

1.14 Handling

Manual handling of large and / or heavy products may present a risk of injury. Lifting, pushing, pulling, carrying or supporting a load by bodily force can cause injury particularly to the back. You are advised to assess the risks taking into account the task, the individual, the load and the working environment and use the appropriate handling method depending on the circumstances of the work being done.

1.15 Residual hazards

In normal use the external surface of the product may be hot. Many products are not self-draining. Take due care when dismantling or removing the product from an installation (refer to 'Maintenance instructions').

1.16 Freezing

Provision must be made to protect products which are not self-draining against frost damage in environments where they may be exposed to temperatures below freezing point.

1.17 Returning products

Customers and stockists are reminded that under EC Health, Safety and Environment Law, when returning products to Spirax Sarco they must provide information on any hazards and the precautions to be taken due to contamination residues or mechanical damage which may present a health, safety or environmental risk. This information must be provided in writing including Health and Safety data sheets relating to any substances identified as hazardous or potentially hazardous.

SHOPVALVES
GLOBAL VALVE SOLUTIONS | 阀门易购

SHOPVALVES
GLOBAL VALVE SOLUTIONS | 阀门易购

2. General product information

2.1 Introduction

The SP7-1 is an intelligent digital positioner available with communication via HART within the positioner product range. Unsurpassed shock absorption and vibration compensation from 10 g to 80 Hz distinguishes the SP7-1 from other products and guarantees reliable operation in nearly any area under the harshest ambient conditions.

2.2 Operating principle

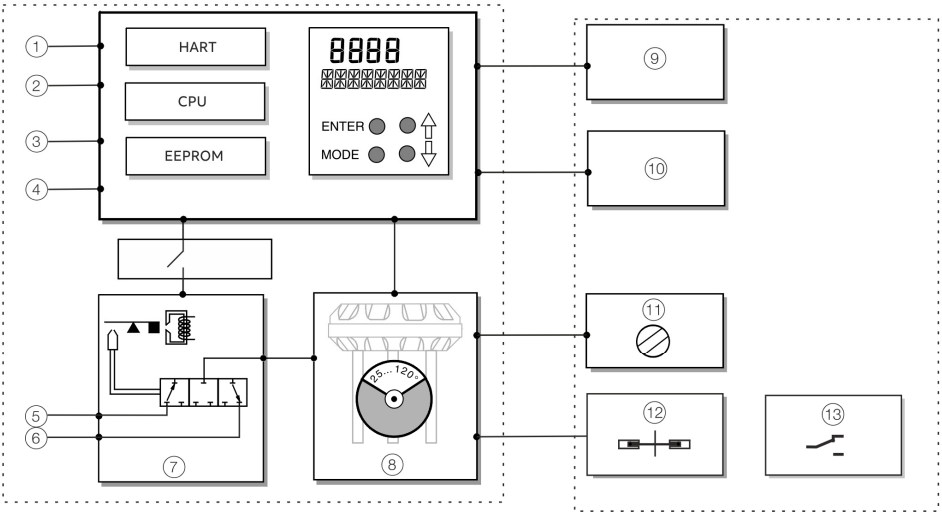

Fig. 1 Schematic diagram

SHOPVALVES
GLOBAL VALVE SOLUTIONS | 阀门易购

SHOPVALVES
GLOBAL VALVE SOLUTIONS | 阀门易购

Basic device

1 LCI plug *

2 Setpoint signal 4 to 20 mA/bus connection 9 to 32 Vdc

3 Binary input *

4 Binary output *

5 Supply air: 1.4 to 6 bar (20 to 90 psi)

6 Exhaust

7 I/P module with 3/3-way valve

8 Position sensor (optional up to 270° rotation angle)

Optional upgrades

9 Plug-in module analog feedback (4 to 20 mA) *

10 Plug-in module for digital feedback *

11 Installation kit for mechanical position indication

12 Installation kit for digital feedback with proximity switches

13 Installation kit for digital feedback with 24 V microswitches

* Only for devices with HART Communication.

Note : With optional upgrades either, the ‘Installation kit for digital feedback with proximity switches’ m or the ‘Installation kit for digital feedback with 24 V microswitches’ can be used.
In both cases though, the mechanical position indication l must be installed.

SHOPVALVES
GLOBAL VALVE SOLUTIONS | 阀门易购

SHOPVALVES
GLOBAL VALVE SOLUTIONS | 阀门易购

2.3 Label description

- Order-Code
- Serial no.
- HW-Rev.
- SW-Rev.
- DOM
- Special Request
- Supply press.
- Input
- Output
- Safe position

Label examples

Safe area

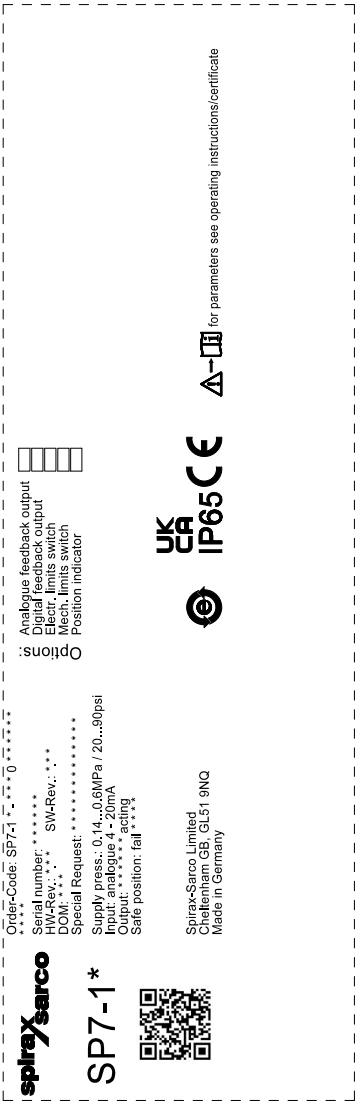

ATEX/IECEx

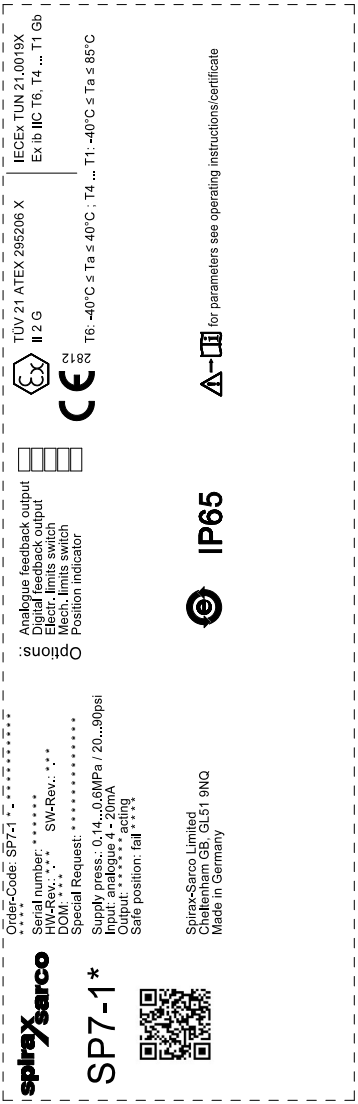

SHOPVALVES
GLOBAL VALVE SOLUTIONS | 阀门易购

SHOPVALVES
GLOBAL VALVE SOLUTIONS | 阀门易购

Options:

- Analogue feedback output
- Digital feedback output
- Electr. limits switch
- Mech. limits switch
- Position indicator
- Approvals

Label examples

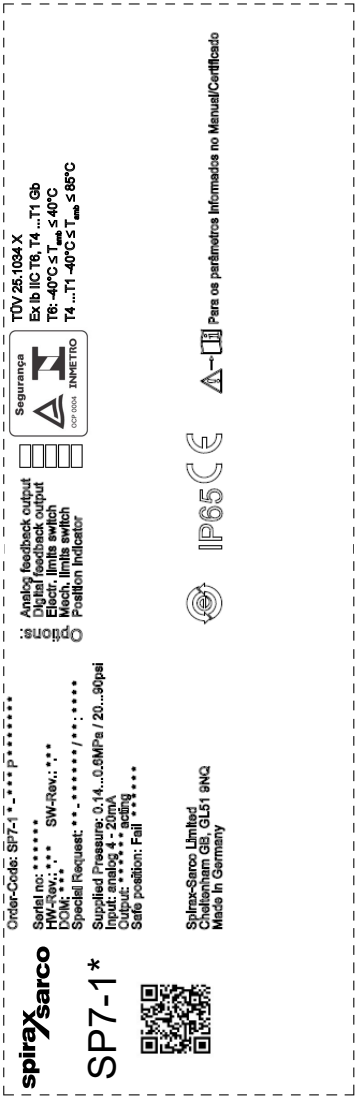

INMETRO

NEPSI

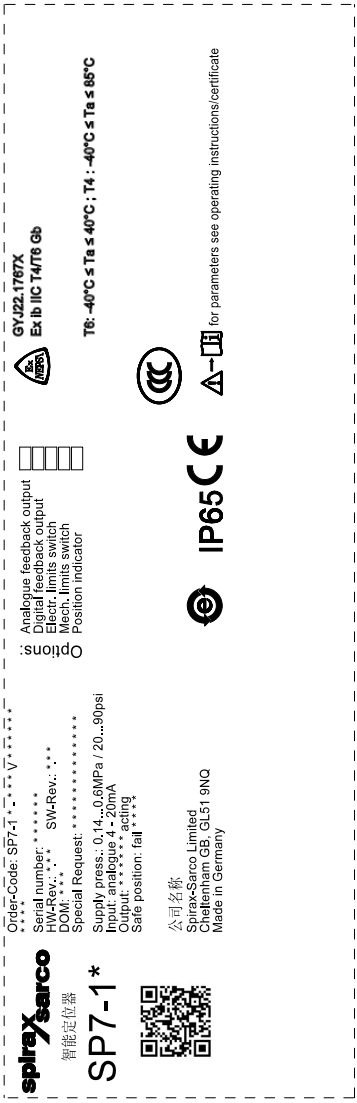

SHOPVALVES
GLOBAL VALVE SOLUTIONS | 阀门易购

SHOPVALVES
GLOBAL VALVE SOLUTIONS | 阀门易购

2.4 Principle of operation

The SP7-10, SP7-11, SP7-12 is an electronically configurable positioner with communication capabilities designed for mounting on pneumatic linear or rotary actuators.
Fully automatic determination of the control parameters and adaptation to the positioner allow for considerable time savings as well as optimum control behavior.

SHOPVALVES
GLOBAL VALVE SOLUTIONS | 阀门易购

SHOPVALVES
GLOBAL VALVE SOLUTIONS | 阀门易购

3. Installation

3.1 Mechanical mounting

Arrow (1) on the device feedback shaft (position feedback) point must move between the arrow marks (2)

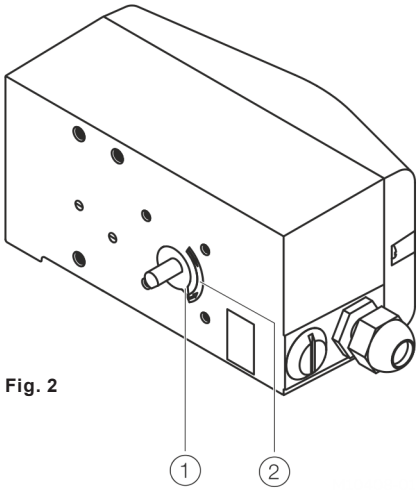

Fig. 2

3.1.2 Measuring and operating ranges of the positioner

Operating range for linear actuators:
The operating range for linear actuators is ±45° symmetrically to the longitudinal axis. The usable span within the operating range is at least 25° (recommended figure 40°). The usable span does not necessarily need to run symmetrically to the longitudinal axis.

Operating range of rotary actuators: The usable span is 90°, which must be entirely within the measuring range, but does not necessarily need to run symmetrically to the longitudinal axis.

Note
During installation make sure that the actuator travel or rotation angle for position feedback is implemented correctly.

(1) Measuring range
(2) Operating range

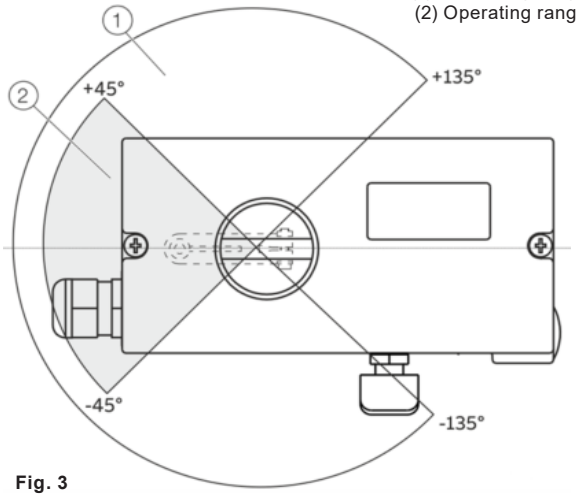

Fig. 3

SHOPVALVES
GLOBAL VALVE SOLUTIONS | 阀门易购

SHOPVALVES
GLOBAL VALVE SOLUTIONS | 阀门易购

3.1.3 Mounting on linear actuators

For mounting on a linear actuator in accordance with IEC 534 (lateral mounting as per NAMUR), the following attachment kit is available:

1	Screw
2	Washer
3	Mounting bracket
4	Lever with follower pin (for mechanical stroke 10 to 35 mm [0.39 to 1.38 in] or 20 to 100 mm [0.79 to 3.94 in])
5	Washers
6	Screws
7	U-Bolts
8	Washers
9	Nuts
10	Screws
11	Spring washers
12	Clamp plates
13	Follower guide

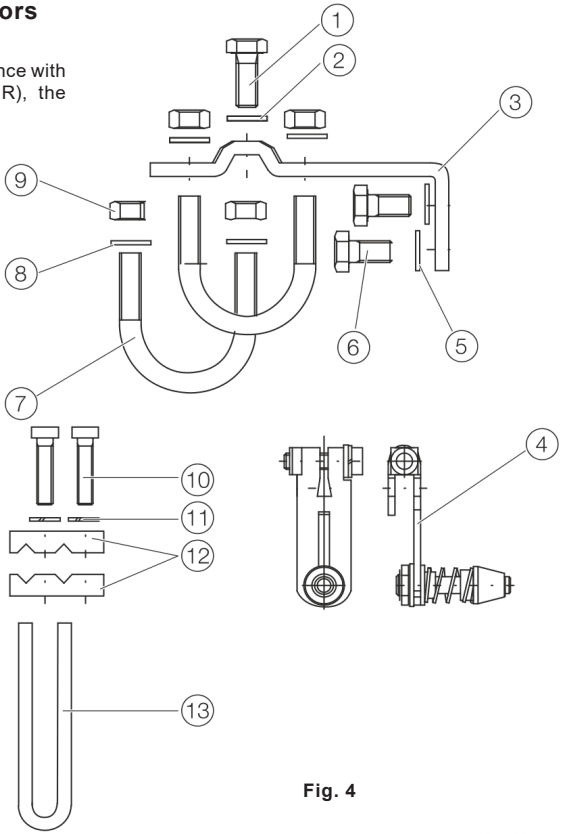

Fig. 4

3.1.4 Attaching a follower guide to the actuator

1. Tighten the screws so that they are hand tight
2. Attach the follower guide (1) and clamp plates (2) with screws (4) and spring washers (3) to the actuator stem.

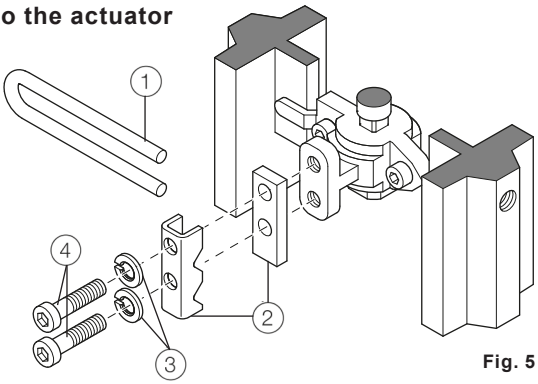

Fig. 5

SHOPVALVES
GLOBAL VALVE SOLUTIONS | 阀门易购

SHOPVALVES
GLOBAL VALVE SOLUTIONS | 阀门易购

3.1.5 Mounting lever and bracket on the positioner

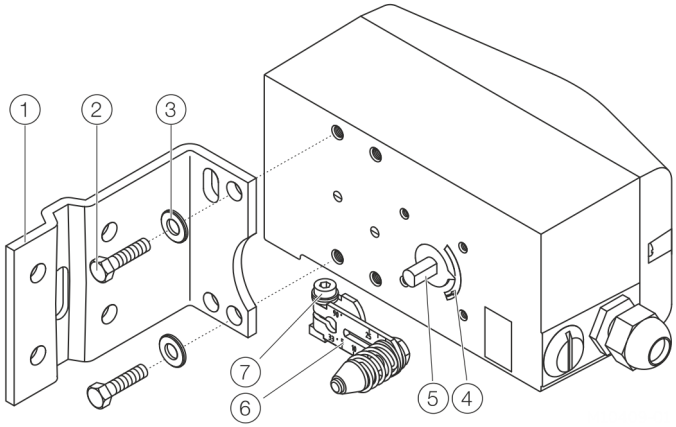

Fig. 6

Note
Positioner mounting threaded holes & bracket holes, depend on the actuator type used. Select to suit, to ensure the follower pin has free movement in the follower guide over entire valve travel.

1. Attach the lever (6) to the feedback shaft (5) of the positioner (can only be mounted in one position due to the cut shape of the feedback shaft).
2. Using the arrow marks (4), check whether the lever moves within the operating range (between the arrows).
3. Hand-tighten the screw (7) on the lever.
4. Hold the prepared positioner (with the mount bracket 1 still loose) on the actuator so that the follower pin for the lever enters the follower guide to determine which tap holes on the positioner must be used for the mount bracket.
5. Secure the mount bracket 1 with screws 2 and washers 3 using the relevant tap holes on the positioner housing.

Tighten the screws as evenly as possible to ensure subsequent linearity.
Align the mount bracket in the oblong hole to ensure that the operating range is symmetrical.
Set the valve mid stroke and align the lever horizontal (item 6 fig. 6).
Then tighten mounting bolt (item 4 fig. 7) (lever moves between the arrow marks item 4 fig. 6).

SHOPVALVES
GLOBAL VALVE SOLUTIONS | 阀门易购

SHOPVALVES
GLOBAL VALVE SOLUTIONS | 阀门易购

3.1.6 Mounting on a yoke

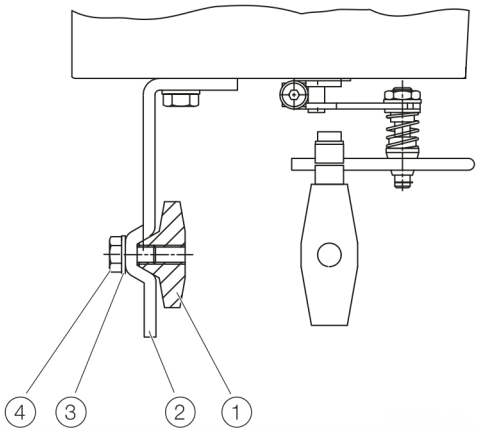

Fig. 7

1. Attach the mount bracket (2) with screw (4) and washer (3) to the yoke (1).

3.1.7 Mounting on a column

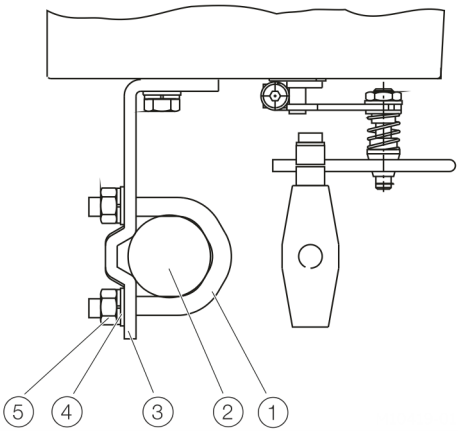

Fig. 8

1. Hold the mount bracket (3) in the proper position on the column (2).
2. Insert the U-bolts (1) from the inside of the column (2) through the holes of the mount bracket.
3. Add the washers (4) and nuts (5).
4. Tighten the nuts so that they are hand-tight.

Note
Adjust the height of the positioner on the cast iron yoke or columnar yoke until the lever is horizontal (based on a visual check) at half stroke of the valve.

SHOPVALVES
GLOBAL VALVE SOLUTIONS | 阀门易购

SHOPVALVES
GLOBAL VALVE SOLUTIONS | 阀门易购

3.1.8 Positioner linkage

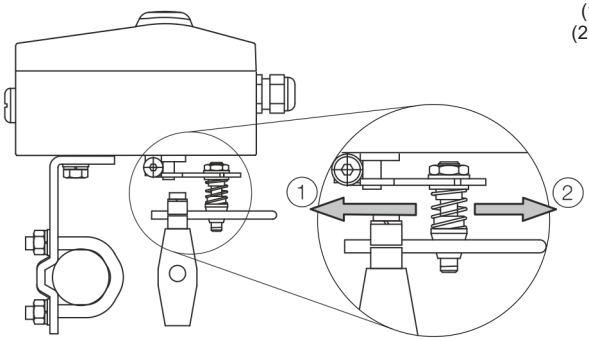

Fig. 9

The scale on the lever indicates the link points for the various stroke ranges of the valve.

Move the bolt with the follower pin in the oblong hole of the lever to adjust the stroke range of the valve to the working range for the position sensor.

Moving the link point inwards increases the rotation angle of the sensor. Moving the link point outwards reduces the rotation angle of the sensor.

Adjust the actuator stroke to make use of as large an angle of rotation as possible (symmetrical around the center position) on the position sensor.

Recommended range for linear actuators: −28 to 28°

Minimum angle: 25°

Note After mounting, check whether the positioner is operating within the measuring range.

3.1.9 Position of the actuator bolt

The actuator bolt for moving the potentiometer lever can be mounted permanently on the lever itself or on the valve stem. Depending on the mounting method, when the valve moves the actuator bolt performs either a circular or a linear movement with reference to the center of rotation of the potentiometer lever. Select the chosen bolt position in the HMI menu in order to ensure optimum linearization. The default setting is actuator bolt on lever

SHOPVALVES
GLOBAL VALVE SOLUTIONS | 阀门易购

SHOPVALVES
GLOBAL VALVE SOLUTIONS | 阀门易购

3.1.10 Actuator bolts on the lever (rear view)

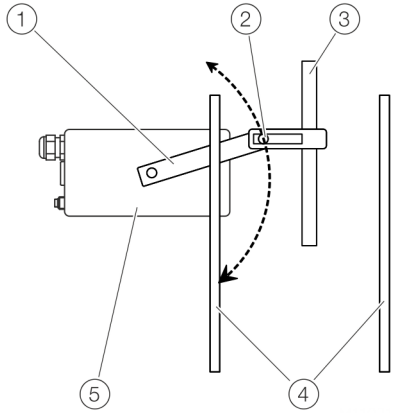

1	Potentiometer lever
2	Actuator bolts
3	Valve stem
4	Valve yoke
5	Positioner

Fig. 10

3.1.11 Actuator bolts on the Valve (rear view)

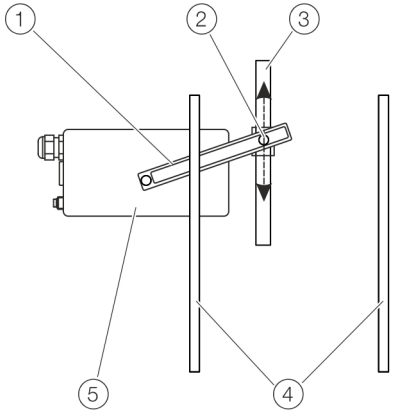

1	Potentiometer lever
2	Actuator bolts
3	Valve stem
4	Valve yoke
5	Positioner

Fig. 11

SHOPVALVES
GLOBAL VALVE SOLUTIONS | 阀门易购

SHOPVALVES
GLOBAL VALVE SOLUTIONS | 阀门易购

3.1.12 Mounting on rotary actuator

For mounting on part-turn actuators in accordance with VDI/VDE 3845, the following attachment kit is available:

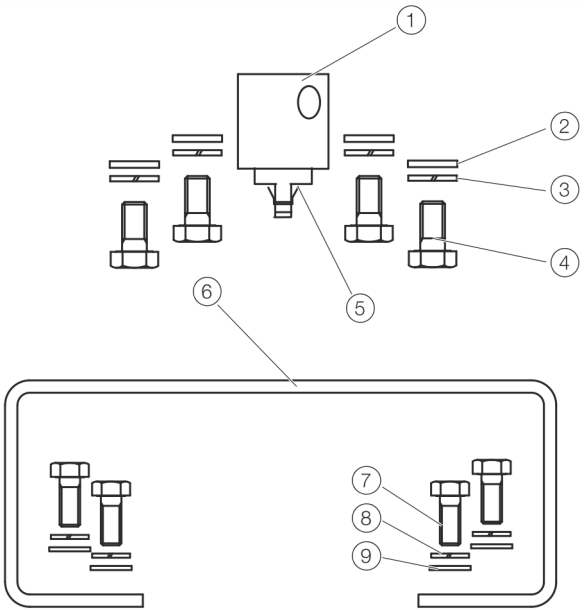

Fig. 12 Components of attachment kit

- Adapter 1 with spring 5
- Four M6 screws each 4, spring washers 3 and washers 2 to fasten the attachment bracket 6 to the positioner
- Four M5 screws 7, Spring washers 8 and washers 9 to fasten the attachment bracket to the actuator

Required tools:

- Wrench, size 8/10
- Allen key, size 3

SHOPVALVES
GLOBAL VALVE SOLUTIONS | 阀门易购

SHOPVALVES
GLOBAL VALVE SOLUTIONS | 阀门易购

3.1.13 Mounting the adapter on the positioner

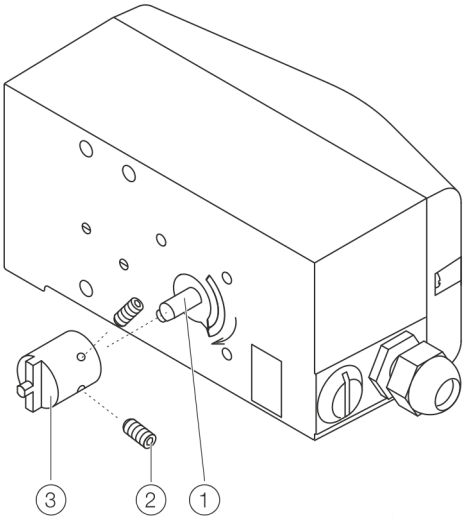

Fig. 13

1. Determine the mounting position (parallel to actuator or at 90° angle).
2. Calculate the rotational direction of the actuator (right or left).
3. Move the part-turn actuator into the home position.
4. Pre-adjust feedback shaft.

To make sure that the positioner runs within the operating range (refer to General on page 14), the mounting position as well as the basic position and rotation direction of the actuator must be considered when determining the adapter position on axis 1. For this purpose, the feedback shaft can be adjusted manually so that the adapter 3 can be attached in the correct position.

5. Place the adapter in the proper position on the feedback shaft and fasten with threaded pins 2. One of the threaded pins must be locked in place on the flat side of the feedback shaft.

SHOPVALVES
GLOBAL VALVE SOLUTIONS | 阀门易购

SHOPVALVES
GLOBAL VALVE SOLUTIONS | 阀门易购

3.1.14 Screwing the attachment bracket onto the positioner

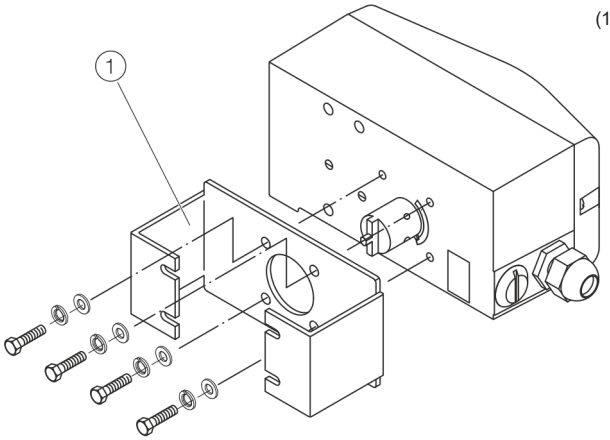

Fig. 14

3.1.15 Screwing the positioner onto the actuator

Note
After mounting, check whether the operating range of the actuator matches the measuring range of the positioner, refer to General on page 14.

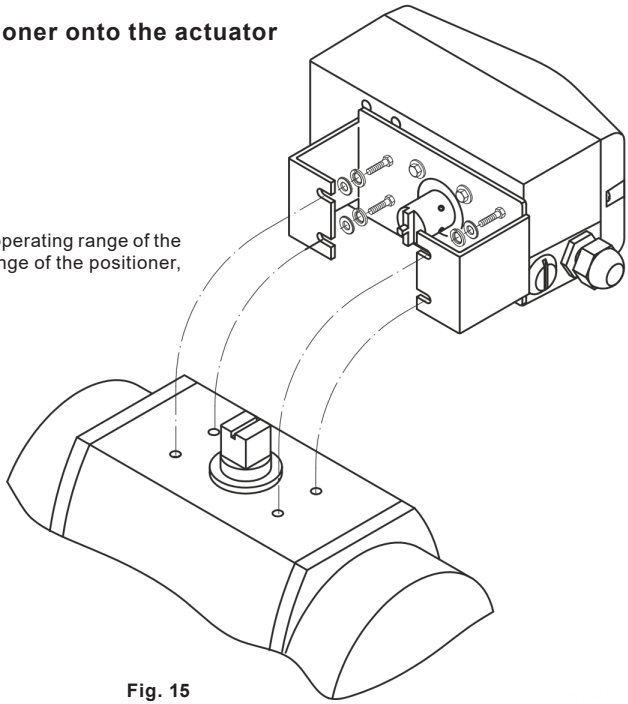

Fig. 15

SHOPVALVES
GLOBAL VALVE SOLUTIONS | 阀门易购

SHOPVALVES
GLOBAL VALVE SOLUTIONS | 阀门易购

3.2 Electrical connections

3.2.1 Positioner SP7-10 Control Unit Electrical Connection

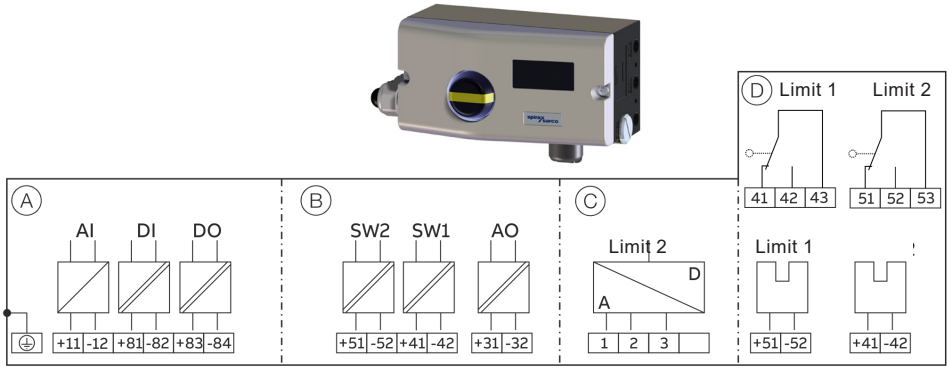

Fig. 16

A Basic device

B Options

C Connection SP7-10 Remote Sensor/remote position sensor (only for SP7-10 Control Unit version)

D Options, limit value monitor with proximity switches or micro-switches (not for SP7-10 Control Unit version)

Terminal	Function/comments
+11/−12	Analog input
+81/−82	Binary input DI
+83/−84	Binary output DO2
+51/−52	Digital feedback SW1 (Option module)
+41/−42	Digital feedback SW2 (Option module)
+31/−32	Analog feedback AO (Option module)
1/2/3	SP7-10 remote sensor (Only for options SP7-10 Remote Sensor or SP7-10 for remote position sensor)
+51/−52	Limit switch Limit 1 with proximity switch (optional)
+41/−42	Limit switch Limit 2 with proximity switch (optional)
41/42/43	Limit switch Limit 1 with micro-switch (optional)
51/52/53	Limit switch Limit 2 with micro-switch (optional)

Note
The SP7-1 can be fitted either with proximity switches or micro-switches as limit switches. It is not possible to combine both variants. For the version SP7-10 Control Unit with SP7-10 Remote Sensor, the limit switches are located in the SP7-10 Remote Sensor.

SHOPVALVES
GLOBAL VALVE SOLUTIONS | 阀门易购

SHOPVALVES
GLOBAL VALVE SOLUTIONS | 阀门易购

3.2.2 SP7-10 Remote Sensor Electrical Connection

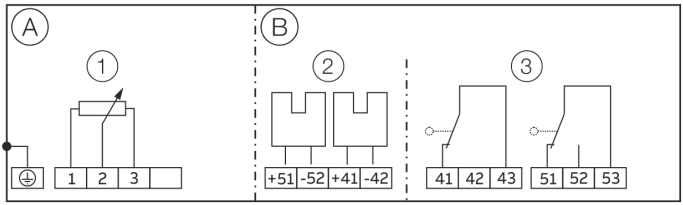

Fig. 17

A Basic device

B Options

1 Position sensor

2 Limit monitor with proximity switches (optional)

3 Limit monitor with micro-switches (optional)

3.2.3 Connections for inputs and outputs

Terminal	Function/comments
1/2/3	SP7-10 control unit
+51/−52	Proximity switches Limit 1 (Option)
+41/−42	Proximity switches Limit 2 (Option)
41/42/43	Micro-switches Limit 1 (Option)
51/52/53	Micro-switches Limit 2 (Option)

Note
The SP7-10 Remote Sensor can be fitted either with proximity switches or micro-switches as limit switches. It is not possible to combine both variants.

SHOPVALVES
GLOBAL VALVE SOLUTIONS | 阀门易购

SHOPVALVES
GLOBAL VALVE SOLUTIONS | 阀门易购

3.3 Electrical connections

3.3.1 Positioner SP7-11/12 Control Unit Electrical Connection

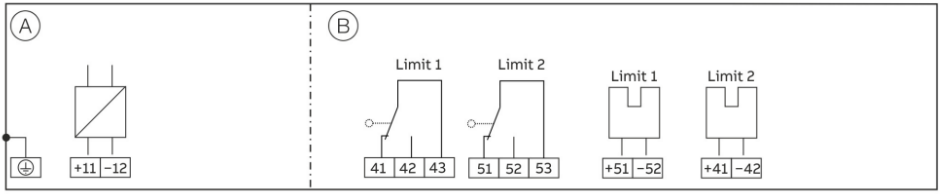

Fig. 17

A Basic device

B Options, digital feedback with proximity switches or microswitches

Terminal	Function/ comments
+11/−12	Fieldbus, bus feed
+51/−52	Digital feedback Limit 1 with proximity switch (optional)
+41/−42	Digital feedback Limit 2 with proximity switch (optional)
41/42/43	Digital feedback Limit 1 with microswitch (optional)
51/52/53	Digital feedback Limit 2 with microswitch (optional)

Note: The SP7-1/11/12 can be fitted either with proximity switches or microswitches as limit switches. It is not possible to combine both variants.

3.3.2 Electrical data for inputs and outputs (SP7-10)

3.3.2.1 Analog input - 4-20 mA or 4-20 mA HART set point signal

Terminals	+11/-12
Nominal operating range	4 to 20 mA
Split range configuration	Selectable; 20 to 100% of nominal range
Maximum input current	50mA
Minimum input current	3.6mA
Load	9.7 V @ 20mA
Impedence @ 20mA	485 Ω

SHOPVALVES
GLOBAL VALVE SOLUTIONS | 阀门易购

SHOPVALVES
GLOBAL VALVE SOLUTIONS | 阀门易购

3.3.2.2 Digital input

Input configurable for the following functions:
- No function
- Move to 0%
- Move to 100%
- Hold previous position
- Block local configuration
- Block local configuration and operation
- Block any access (local or via PC/software)

Terminals	+81/-82
Supply voltage	12 to 30 Vdc
Input 'logic 0'	0 to 5 Vdc

Input 'logic 1'	11 to 30 Vdc
Input current	Maximum 4 mA

3.3.2.3 Binary output DO

Terminals	+83/-84
Supply voltage	5 to 11 Vdc (control circuit in accordance with NAMUR)
Output 'logic 0'	> 0.35 mA to < 1.2 mA
Output 'logic 1'	> 1.2 mA
Action	Configurable (logic '0' or logic '1')

3.3.2.4 Option module for analog feedback AO*

Without signal from the positioner (e.g. ‘no power’ or ‘initializing’) the output value will be > 20 mA (alarm level).

Terminals	+31/-32
Signal range	Configurable across the range 4 to 20 mA
Supply voltage	11 to 30 Vdc
Characteristic	Configurable (4 to 20 mA or 20 to 4 mA)
Deviation	< 1%

3.3.2.5 Option module for digital feedback SW1, SW2*

Two software switches for binary position feedback (position adjustable within the range of 0 to 100 %, ranges cannot overlap)

Terminals	+41/-42, +51/-52
Supply voltage	5 to 11 Vdc (control circuit in accordance with NAMUR)
Output 'logic 0'	< 1.2 mA
Output 'logic 1'	> 1.2 mA
Action	Configurable (logic '0' or logic '1')

*The analog feeback and digital feedback option have specific locations and can be used together

SHOPVALVES
GLOBAL VALVE SOLUTIONS | 阀门易购

SHOPVALVES
GLOBAL VALVE SOLUTIONS | 阀门易购

3.3.2.6 Option Mechanical digital feedback

Two proximity switches or two microswitches provide independent signaling of the valve actuator position. Set points are adjustable between 0 to 100%

Mechanical digital feedback with proximity switches; Limit 1, Limit 2**		
Terminals	+41/-42, +51/-52	
Supply voltage	5 to 11 Vdc (control circuit in accordance with NAMUR)	
Direction of action	Metal tag in proximity	Metal tag outside proximity switch
Type SJ2-SN (NC; log 1)	< 1.2 mA	> 2.1 mA

Mechanical digital feedback with 24V microswitches; Limit 1, Limit **	
Terminals	+41/-42, +51/-52
Supply voltage	maximum 24 Vac/dc
Current rating	maximum 2 A
Contact surface	10 µm Gold (Au)

**Mechanical feedback only possible with mechanical position indicator (housing type '20')

Note: Mechanical feedback only possible with either proximity switches or 24V micoswitches; not both.

SHOPVALVES
GLOBAL VALVE SOLUTIONS | 阀门易购

SHOPVALVES
GLOBAL VALVE SOLUTIONS | 阀门易购

3.3.2.7 Electrical data for use in potentially explosive areas (Ex certified types only)
Only for connection to a certified intrinsically safe circuit

Signal circuit (+11/-12)	Ui = 30 V	Ci = 6.6 nF
	Ii = 320 mA	Li = negligibly small
	Pi = 1.1 W	
Binary input DI (+81/-82)	Ui = 30 V	Ci = 14.5 nF
	Ii = 320 mA	Li = negligibly small
	Pi = 1.1 W	
Binary output DO (+83/-84)	Ui = 30 V	Ci = 14.5 nF
	Ii = 320 mA	Li = negligibly small
	Pi = 500mW	
Mechanical digital feedback (proximity switch) (Limit 1: +51/-52, Limit 2: +41/-42)	Ui = 16 V	Ci = 60 nF
	Ii = 25 mA	Li = 100 µH
Refer to Ex Certificate PTB 00 ATEX 2049 X	Pi = 64 mW	
Digital switch feedback (software switch) (Limit 1: +51/-52, Limit 2: +41/-42)	Ui = 30 V	Ci = 3.7 nF
	Ii = 320 mA	Li = negligibly small
	Pi = 250 mW	
Plug-in module for analog feedback (+31/-32)	Ui = 30 V	Ci = 6.6 nF
	Ii = 320 mA	Li = negligibly small
	Pi = 1.1 W	
Interface with Remote Sensor Ex ib IIC	U0 = 5.4 V	L0 = 5 mH
	I0 = 74 mA	C0 = 2µF
	P0 = 100 mW	Ex ib protection IIB
	Ci = negligibly small	L0 = 5 mH
	Li = negligibly small	C0 = 2 µF
Local Communication Interface (LCI)	Only for connection to a programming device using ABB LCI adaptor (Um ≤ 30 Vdc) outside hazardous area	

SHOPVALVES
GLOBAL VALVE SOLUTIONS | 阀门易购

SHOPVALVES
GLOBAL VALVE SOLUTIONS | 阀门易购

3.3.3 Electrical data for inputs and outputs (SP7-11)

3.3.3.1 Fieldbus communication

PROFIBUS PA

Terminals	+11/-12
Supply Voltage	9 to 32 Vdc (Power from PA Bus)
Maximum voltage	35 Vdc
Input current	10.5 mA
Current in the event of an error	15 mA (10.5 mA + 4.5 mA)

3.3.3.2 Optional Mechanical digital feedback

Two proximity switches or two microswitches provide independent signaling of the valve actuator position. Set points are adjustable between 0 to 100%

3.3.3.3 Mechanical digital feedback with proximity switches; Limit 1, Limit 2**

Terminals	+51/-52 (Limit 1), +41/-42, (Limit 2)	
Supply voltage	5 to 11 Vdc (control circuit in accordance with NAMUR)	
Direction of action	Metal tag in proximity	Metal tag outside proximity switch
Type SJ2-SN (NC; log 1)	> 2.1 mA	< 1.2 mA

3.3.3.4 Mechanical digital feedback with 24V microswitches; Limit 1, Limit 2 **

Terminals	41/42/43 (Limit 1), 51/52/53 (Limit 2)
Supply voltage	maximum 24 Vac/dc
Current rating	maximum 2 A
Contact surface	10 µm Gold (Au)

**Mechanical feedback only possible with mechanical position indicator (housing type '20')
Note: Mechanical feedback only possible with either proximity switches or 24V micoswitches; not both.

3.3.3.5 Electrical data for use in potentially explosive areas (Ex certified types only)

For intrinsically safe Ex i IIC protection, a FISCO certified power supply, a barrier or a power supply with linear characteristics and the following maximum values must be used:

Signal circuit (+11/-12)	Ui = 24 V	Ci = < 5.0 nF
	Ii = 250 mA	Li = < 10 µH
	Pi = 1.2 W	
Mechanical digital feedback (proximity switch) (+51/-52: Limit 1, +41/-42: Limit 2)	Ui = 16 V	Ci = 60 nF
	Ii = 25 mA	Li = 100 µH
	Pi = 64 mW	
Proximity switch: Pepperl+Fuchs SJ2-SN		
Refer to Ex Certificate PTB 00 ATEX 2049 X		

SHOPVALVES
GLOBAL VALVE SOLUTIONS | 阀门易购

SHOPVALVES
GLOBAL VALVE SOLUTIONS | 阀门易购

3.3.4 Electrical data for inputs and outputs (SP7-12)

3.3.4.1 Fieldbus communication

Foundation Fieldbus

Terminals	+11/-12
Supply Voltage	9 to 32 Vdc (Power from Fieldbus)
Maximum voltage	35 Vdc
Input current	11.5 mA
Current in the event of an error	15 mA (11.5 mA + 3.5 mA)

3.3.4.2 Optional Mechanical digital feedback

Two proximity switches or two microswitches provide independent signaling of the valve actuator position. Set points are adjustable between 0 to 100%

3.3.4.3 Mechanical digital feedback with proximity switches; Limit 1, Limit 2**

Terminals	+51/-52 (Limit 1), +41/-42, (Limit 2)	
Supply voltage	5 to 11 Vdc (control circuit in accordance with NAMUR)	
Direction of action	Metal tag in proximity	Metal tag outside proximity switch
Type SJ2-SN (NC; log 1)	> 2.1 mA	< 1.2 mA

3.3.4.4 Mechanical digital feedback with 24V microswitches; Limit 1, Limit 2 **

Terminals	41/42/43 (Limit 1), 51/52/53 (Limit 2)
Supply voltage	maximum 24 Vac/dc
Current rating	maximum 2 A
Contact surface	10 µm Gold (Au)

**Mechanical feedback only possible with mechanical position indicator (housing type '20')
Note: Mechanical feedback only possible with either proximity switches or 24V micoswitches; not both.

3.3.4.5 Electrical data for use in potentially explosive areas (Ex certified types only)

For intrinsically safe Ex i IIC protection, a FISCO certified power supply, a barrier or a power supply with linear characteristics and the following maximum values must be used:

Signal circuit (+11/-12)	Ui = 24 V	Ci = < 5.0 nF
	Ii = 250 mA	Li = < 10 µH
	Pi = 1.2 W	
Mechanical digital feedback (proximity switch) (+51/-52: Limit 1, +41/-42: Limit 2)	Ui = 16 V	Ci = 60 nF
	Ii = 25 mA	Li = 100 µH
	Pi = 64 mW	
Proximity switch: Pepperl+Fuchs SJ2-SN		
Refer to Ex Certificate PTB 00 ATEX 2049 X		

SHOPVALVES
GLOBAL VALVE SOLUTIONS | 阀门易购

SHOPVALVES
GLOBAL VALVE SOLUTIONS | 阀门易购

3.4 Connection on the device

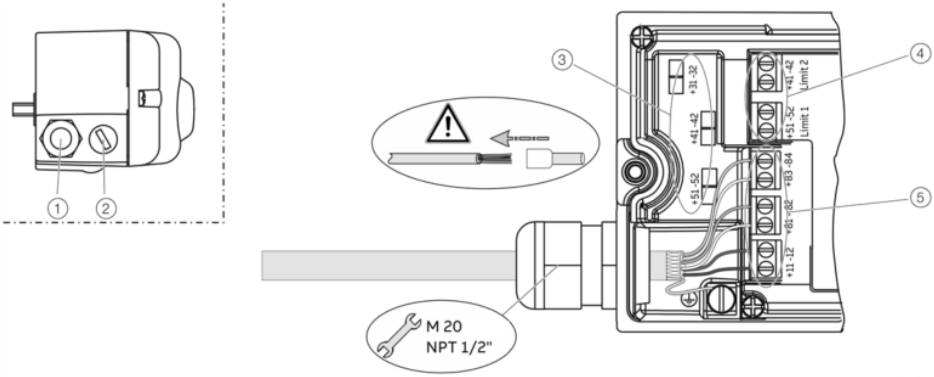

Fig. 18

1	Cable gland
2	Blind plug
3	Terminals for option modules
4	Terminal attachment kit for digital feedback
5	Terminals for basic unit

2 tap holes ½ 14 NPT or M20 × 1.5 are provided on the left side of the housing for cable entry in the housing. One of the tap holes is fitted with a cable gland, while the other tap hole has a blind plug.

Note
The connecting terminals are delivered closed and must be unscrewed before inserting the wire.

1. Strip the wires to approximately 6 mm (0.24 in).
2. Connect the wires to the connecting terminals in line with the connection diagram.

SHOPVALVES
GLOBAL VALVE SOLUTIONS | 阀门易购

SHOPVALVES
GLOBAL VALVE SOLUTIONS | 阀门易购

3.4.1 Wire cross-sectional areas

Basic device - Electrical connections	
4 to 20 mA input	Screw terminals max. 2.5 mm² (AWG14)
Options	Screw terminals max. 1.0 mm² (AWG18)

Cross section	
Rigid/flexible wires	0.14 to 2.5 mm² (AWG26 to AWG14)
Flexible with wire end sleeve	0.25 to 2.5 mm² (AWG23 to AWG14)
Flexible with wire end sleeve no plastic sleeve	0.25 to 1.5 mm² (AWG23 to AWG17)
Flexible with wire end sleeve with plastic sleeve	0.14 to 0.75 mm² (AWG26 to AWG20)

Multi-wire connection capacity (two wire with the same cross-section)	
Rigid/flexible wires	0.14 to 0.75 mm² (AWG26 to AWG20)
Flexible with wire end sleeve no plastic sleeve	0.25 to 0.75 mm² (AWG23 to AWG20)
Flexible with wire end sleeve with plastic sleeve	0.5 to 1.5 mm² (AWG21 to AWG17)

3.4.2 Option modules

Cross section	
Rigid/flexible wires	0.14 to 1.5 mm² (AWG26 to AWG17)
Flexible with wire end sleeve no plastic sleeve	0.25 to 1.5 mm² (AWG23 to AWG17)
Flexible with wire end sleeve with plastic sleeve	0.25 to 1.5 mm² (AWG23 to AWG17)

Multi-wire connection capacity (two wire with the same cross-section)	
Rigid/flexible wires	0.14 to 0.75 mm² (AWG26 to AWG20)
Flexible with wire end sleeve no plastic sleeve	0.25 to 0.5 mm² (AWG23 to AWG22)
Flexible with wire end sleeve with plastic sleeve	0.5 to 1 mm² (AWG21 to AWG18)

Limit switch with proximity switches or 24 V micro-switches	
Rigid wire	0.14 to 1.5 mm² (AWG26 to AWG17)
Flexible wire	0.14 to 1.0 mm² (AWG26 to AWG18)
Flexible with wire end sleeve no plastic sleeve	0.25 to 0.5 mm² (AWG23 to AWG22)
Flexible with wire end sleeve with plastic sleeve	0.25 to 0.5 mm² (AWG23 to AWG22)

SHOPVALVES
GLOBAL VALVE SOLUTIONS | 阀门易购

SHOPVALVES
GLOBAL VALVE SOLUTIONS | 阀门易购

3.5 Connection on device - SP7-10 Control Unit with SP7-10 Remote Sensor

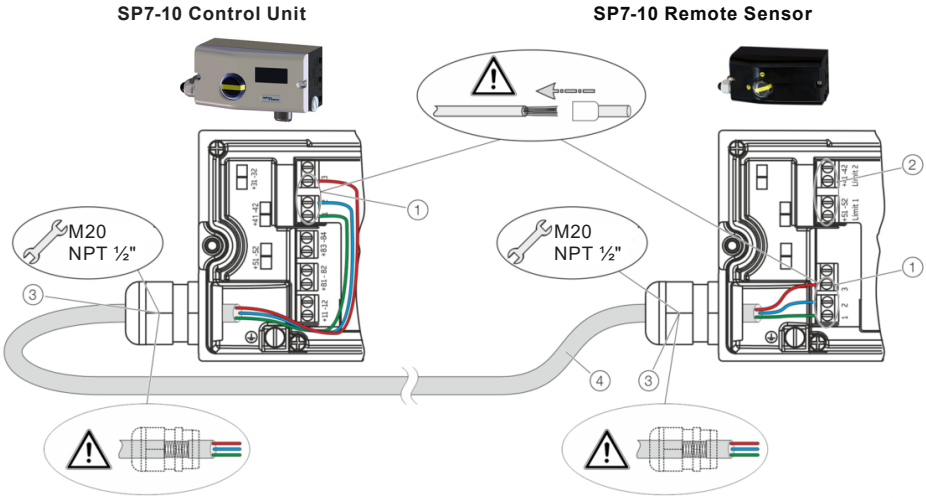

Fig. 19

1 Terminals SP7-10 Remote Sensor

2 Terminal attachment kit for digital feedback

3 EMC Cable gland

4 Shielded connection cable

In the case of the 'SP7-10 Control Unit with SP7-10 Remote Sensor' design, the components are supplied in two housings, which together form one harmonized unit.

Housing 1 (SP7-10 Control Unit) contains the electronics and pneumatics along with the following options (where applicable):

- Analog position feedback
- Digital position feedback

Housing 2 (SP7-10 Remote Sensor) contains the position sensor and is suitable for mounting on linear or part-turn actuators.

The following options may be installed, depending on the configuration ordered.

- Optical position indicator
- Mechanical feedback contacts designed as proximity switches or microswitchesmicro-switches.

SHOPVALVES
GLOBAL VALVE SOLUTIONS | 阀门易购

SHOPVALVES
GLOBAL VALVE SOLUTIONS | 阀门易购

Connect the positioner (SP7-10 Control Unit, housing 1) and remote position sensor (SP7-10 Remote Sensor, housing 2) while following the instructions below:

- The sensor and the electronics have been matched. Ensure that only devices with the same serial number are connected.
- A shielded 3-wire cable with a maximum length of 10 m (33 ft) must be used for the connection.
- Route the cable into the terminal compartment through the EMC cable glands (optional at time of ordering). Ensure that the shielding is secured correctly in the EMC cable glands.
- Connect the cables in accordance with the electrical connections and tighten the screws of the terminals so that they are hand-tight.
- The electrical connection of the SP7-10 Control Unit and the optional modules are described in Positioner/ SP7-10 Control Unit Electrical Connection on page 24.
- If the SP7-10 Control Unit is fastened so that it is it non-conductive, the housing must be grounded (SP7-10 Control Unit and SP7-10 Remote Sensor housing with the same electric potential); otherwise control deviations could occur with regard to analog position feedback.
- Use wire end ferrules when connecting.

SHOPVALVES
GLOBAL VALVE SOLUTIONS | 阀门易购

SHOPVALVES
GLOBAL VALVE SOLUTIONS | 阀门易购

3.6 Connection on device – SP7-10 Control Unit for remote position sensor

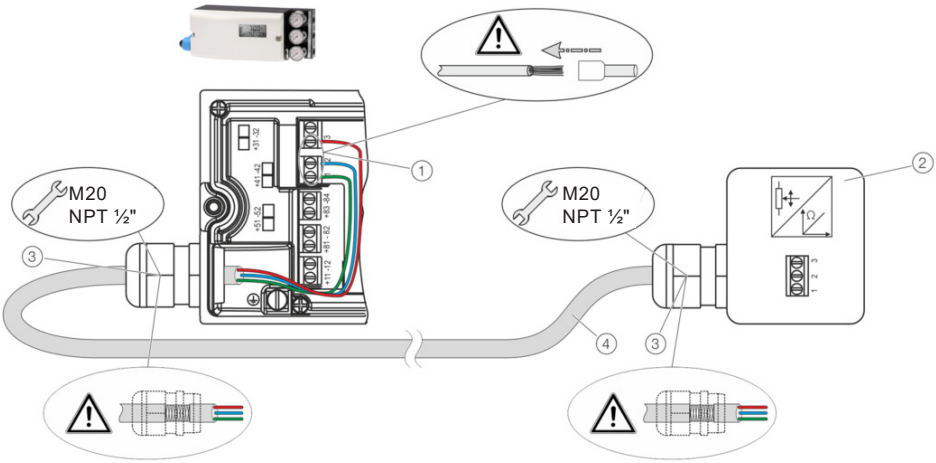

Fig. 20

1 Terminals for remote position sensor

2 Remote position sensor

3 EMC Cable gland

4 Shielded connection cable

With the SP7-10 designed for remote position sensors, the positioner is supplied without a position sensor.

The SP7-10 Control Unit contains the electronics and pneumatics along with the following options (where applicable):

- Analog position feedback
- Digital position feedback

Any position sensor (4 to 30 kΩ, with line break detection 4 to 18 kΩ) can be connected.

SHOPVALVES
GLOBAL VALVE SOLUTIONS | 阀门易购

SHOPVALVES
GLOBAL VALVE SOLUTIONS | 阀门易购

Connect the positioner (SP7-10 Control Unit) and remote position sensor while observing the following instructions:

- A shielded 3-wire cable with a maximum length of 10 m (33 ft) must be used for the connection.
- Route the cable into the terminal compartment through the EMC cable glands (optional at time of ordering). Ensure that the shielding is secured correctly in the EMC cable glands.
- Connect the cables in accordance with the electrical connections and tighten the screws of the terminals so that they are hand-tight.
- The electrical connection of the SP7-10 Control Unit and the optional modules are described in Positioner/ SP7-10 Control Unit Electrical Connection on page 24.
- If the SP7-10 Control Unit is fastened such that it is it non-conductive, the housing must be grounded (SP7-10 Control Unit and remote position sensor housing with the same electric potential); otherwise control deviations could occur with regard to analog position feedback.
- Use wire end ferrules when connecting.

SHOPVALVES
GLOBAL VALVE SOLUTIONS | 阀门易购

SHOPVALVES
GLOBAL VALVE SOLUTIONS | 阀门易购

3.7 Pneumatic connections

Note
The positioner must only be supplied with instrument air that is free of oil, water, and dust.
The purity and oil content must meet the requirements of Class 3:3:3 in accordance with ISO 8573-1.

Notice
Damage to components!
Contamination on the air pipe and positioner can damage components.

- Dust, splinters, and any other particles of dirt must be blown-out before the pipe is connected.

Pressure above 6 bar (90 psi) can damage the positioner or actuator.

- Provisions must be made (e.g., by using a pressure reducer) to make sure that the pressure does not rise above 6 bar (90 psi)*, even in the event of a fault.

Information on double acting actuators with spring-return mechanism
On double-acting actuators with spring-return mechanism, a pressure that significantly exceeds the supply air pressure value can be generated during operation by the springs in the chamber opposite the springs. This may damage the positioner or adversely affect control of the actuator.

To eliminate the possibility of this occurring, it is recommended to install a pressure compensation valve between the springless chamber and the supply air for these types of applications. It enables the increased pressure to be transferred back to the air inlet line.
The opening pressure of the check valve should be < 250 mbar (< 3.6 psi).

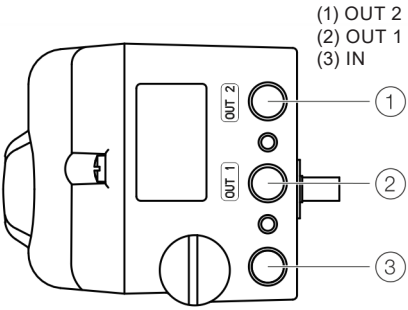

Fig. 21

Marking	Pipe connection
IN	Supply air, pressure 1.4 to 6 bar (20 to 90 psi)
OUT1	Output pressure to the actuator
OUT2	Output pressure to the actuator (2). Connection with double acting actuator)

Join the pipe connections according to the designation, observing the following points:

- All pneumatic piping connections are located on the right-hand side of the positioner. ¼ 18 NPT tap holes are provided for the pneumatic connections. The positioner is labeled according to the tap holes available.
- We recommend that you use a pipe with dimensions of 12 × 1.75 mm.
- The supply air pressure required to apply the actuating force must be adjusted in line with the output pressure in the actuator. The operating range of the positioner is between 1.4 to 6 bar (20 to 90 psi).

SHOPVALVES
GLOBAL VALVE SOLUTIONS | 阀门易购

SHOPVALVES
GLOBAL VALVE SOLUTIONS | 阀门易购

3.7.1 Pneumatic connections - Air supply

Instrument air*

Purity	Maximum particle size: 5 µm Maximum particle density: 5 mg/m^3
Oil content	Maximum concentration 1 mg/m^3
Pressure dew point	10 K below operating temperature
Supply pressure**	Standard design: 1.4 to 6 bar (20 to 90 psi)
Air consumption***	< 0.03 kg/h/0.015 scfm

* Free of oil, water and dust in accordance with DIN/ISO 8573-1. Pollution and oil content in accordance with Class 3:3:3

** Do not exceed the maximum output pressure of the actuator

*** Independent of supply pressure

SHOPVALVES
GLOBAL VALVE SOLUTIONS | 阀门易购

SHOPVALVES
GLOBAL VALVE SOLUTIONS | 阀门易购

4. Commissioning

Operators must wear ear protection when commissioning the positioner

Note: The electrical power supply and supply air pressure data indicated on the name plate must be complied with during commissioning.

Caution

Risk of injury due to incorrect parameter values!
Incorrect parameter values can cause the valve to move unexpectedly. This can lead to process failures and result in injuries.

- Before recommissioning a positioner that was previously in use at another location, always reset the device to its factory settings.
- Never start automatic adjustment before restoring the factory settings!

4.1 Commissioning the positioner

1. Open the pneumatic power supply.
2. Power-up the electric power supply and feed in the set point signal 4 to 20 mA.
3. Checking mechanical mounting:
   - Press and hold MODE; in addition, press ARROW UP or ARROW DOWN until operating mode 1.3 (manual adjustment in the measuring range) is displayed. Release MODE.
   - Press ARROW UP or ARROW DOWN to move the actuator into the mechanical end position; check the end positions; rotational angle is displayed in degrees; for high-speed mode, press ARROW UP or ARROW DOWN simultaneously.

Note! For manual setup, refer to parameterization document IM-S51-07 for details.

4.2 Recommended rotational angle range

Linear actuators	−28 to 28°
Rotary actuators	−57 to 57°
Minimum angle	25°

4. Perform standard automatic adjustment in accordance with standard automatic adjustment.

Commissioning of the positioner is now complete, and the device is ready for operation.

SHOPVALVES
GLOBAL VALVE SOLUTIONS | 阀门易购

SHOPVALVES
GLOBAL VALVE SOLUTIONS | 阀门易购

4.3 Operating modes

Selection from the operating level

1. Press and hold down MODE.
2. Also press and release ARROW UP rapidly as often as required. The selected operating mode is displayed.
3. Release MODE.

The position is displayed in % or as a rotation angle.

Operating mode	Mode indicator	Position indicator
1.0 Control mode* with adaptation of the control parameters		
1.1 Control mode* without adaptation of the control parameters		
1.2 Manual adjustment** in the operating range. Adjust*** using ARROW UP or ARROW DOWN		
1.3 Manual adjustment** in the measuring range. Adjust*** using ARROW UP or ARROW DOWN		

* Since self-optimization in operating mode 1.0 is subject to several factors during control operation with adaptation, incorrect adjustments could appear over an extended period.
** Positioning not active.
*** For high-speed mode, press ARROW UP and ARROW DOWN simultaneously.

SHOPVALVES
GLOBAL VALVE SOLUTIONS | 阀门易购

SHOPVALVES
GLOBAL VALVE SOLUTIONS | 阀门易购

4.4 Standard automatic adjustment

Note: Standard Auto Adjust does not always result in optimum control conditions.

Standard automatic adjustment for linear actuators*

1. MODE Press and hold until ADJ_LIN is displayed.
2. MODE Press and hold until the countdown ends.
3. Release MODE; this starts Auto-adjust.

Standard automatic adjustment for rotary actuators*

1. ENTER Press and hold until ADJ_ROT is displayed.
2. ENTER Press and hold until the countdown ends.
3. Release ENTER; this starts Auto-adjust.

If Auto-adjust is successful, the parameters will be stored automatically and the positioner will revert to operating mode 1.1.

If an error occurs during Auto-adjust, the process will be terminated with an error message.

Perform the following steps if an error occurs:

1. Press and hold down operating button ARROW UP or ARROW DOWN for approximately three seconds. The unit will switch to the operating level, mode 1.3 (manual adjustment within the measuring range).
2. Check mechanical mounting in accordance with Mechanical mounting on page 14 and repeat the standard automatic adjustment.

* The zero position is determined automatically and saved during standard automatic adjustment, counter-clockwise (CTCLOCKW) for linear actuators and clockwise (CLOCKW) for rotary actuators.

SHOPVALVES
GLOBAL VALVE SOLUTIONS | 阀门易购

SHOPVALVES
GLOBAL VALVE SOLUTIONS | 阀门易购

4.5 Commissioning SP7-11/12

Commissioning the positioner:

1. Open the pneumatic power supply.

2. Connect fieldbus or power supply to the bus connections.

The following is now shown in the display:

3. Checking mechanical mounting:

- Press and hold down MODE and ENTER; once the countdown has gone from 3 to 0, release MODE and ENTER. The device switches to the operating level n operating mode 1.x.
- Press and hold MODE and ENTER, and then press UP or DOWN until operating mode 1.3 (manual adjustment within the sensor range) is displayed. Release MODE.
- Press UP or DOWN to move the actuator into the mechanical end position; check the end positions; rotation angle is displayed in degrees; for high-speed mode, press UP or DOWN simultaneously.

Recommended rotational angle range	
Linear actuators	−28 to 28°
Rotary actuators	−57 to 57°
Minimum angle	25°

4. Go back to the bus level:

- Press and hold down MODE and ENTER; once the countdown has gone from 3 to 0, release MODE and ENTER.

The following is now shown in the display:

5. Perform standard automatic adjustment in accordance with standard automatic adjustment. Make sure the device is on the bus level (REMOTE).

6. Set dead zone and tolerance band. This step is only required for critical (e.g. very small) actuators. In normal cases you can skip this step.

Commissioning of the positioner is now complete, and the device is ready for operation.

SHOPVALVES
GLOBAL VALVE SOLUTIONS | 阀门易购

SHOPVALVES
GLOBAL VALVE SOLUTIONS | 阀门易购

4.6 Setting the bus address

1. Switching to the configuration level:

- Press and hold down UP and DOWN simultaneously, additionally quickly press and release ENTER,
- Wait for the countdown to go from 3 to 0,
- Release UP and DOWN.

The following is now shown in the display:

2. Switch to parameter group 1.5:

- Press and hold down MODE and ENTER simultaneously, additionally, press UP and DOWN.

The following is now shown in the display:

- Release MODE.

The following is now shown in the display:

3. Setting the bus address:

- Press UP or DOWN to set the correct value,
- Press and hold down ENTER until the countdown goes from 3 to 0.
- Release ENTER.

The new bus address is saved.

SHOPVALVES
GLOBAL VALVE SOLUTIONS | 阀门易购

SHOPVALVES
GLOBAL VALVE SOLUTIONS | 阀门易购

4. Switch to parameter 1.6 (return to operating level) and save the new setting:

- Press and hold down Mode, additionally quickly press UP 2 times,

The following is now shown in the display:

- Release MODE,
- Quickly press and release DOWN to select NV_SAVE,
- Press and hold down ENTER until the countdown goes from 3 to 0.

The new parameter setting is saved and the positioner automatically returns to the operating level. It continues in the operating mode that was active prior to the configuration level being called up.

4.7 Request information

When the device is in bus operation, the information listed below can be called up.

Press the following control buttons to access this information:

Control buttons	Action
● ↑	Cyclic communication: Set point in % and the set point status is displayed. Acyclic communication: Displays the communication status.
● ↓	Displays the bus address and operating mode.
Enter ●	Displays the software revision.

SHOPVALVES
GLOBAL VALVE SOLUTIONS | 阀门易购

SHOPVALVES
GLOBAL VALVE SOLUTIONS | 阀门易购

4.8 Operating modes

Selection from the operating level:
1. Press and hold down MODE.
2. Also press and release UP rapidly as often as required. The selected operating mode is displayed.
3. Release MODE.
The position is displayed in % or as a rotation angle.

Operating mode	Mode indicator	Position indicator
1.1 Positioning with fixed set point. Adjust set point by using UP or DOWN.		
1.2 Manual adjustment* in the operating range. Adjust with UP or DOWN **		
1.3 Manual adjustment* within the sensor range. Adjust with UP or DOWN**		

* Positioning not active.
** For high-speed mode, press UP and DOWN simultaneously.

SHOPVALVES
GLOBAL VALVE SOLUTIONS | 阀门易购

SHOPVALVES
GLOBAL VALVE SOLUTIONS | 阀门易购

4.9 Jumper configuration

Only on SP7-12

There are two jumpers on the mainboard that can be used to activate or block simulation mode and write access.

Set the jumpers as shown below:

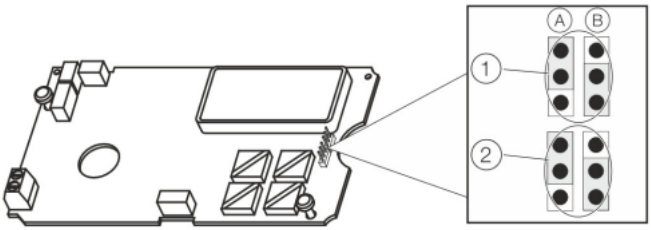

Fig. 22

Jumper	Number	Function
1	A B	Simulation blocked* Simulation enabled
2	A B	Write access blocked Write access activated*

* Default setting (in accordance with Fieldbus Foundation standard)

SHOPVALVES
GLOBAL VALVE SOLUTIONS | 阀门易购

SHOPVALVES
GLOBAL VALVE SOLUTIONS | 阀门易购

4.10 Standard automatic adjustment

Note : Standard Auto Adjust does not always result in optimum control conditions.

Standard automatic adjustment for linear actuators*

1. MODE Press and hold until ADJ_LIN is displayed.
2. MODE Press and hold until the countdown ends.
3. Release MODE; this starts Auto-adjust.

Standard automatic adjustment for rotary actuators*

1. ENTER Press and hold until ADJ_ROT is displayed.
2. ENTER Press and hold until the countdown ends.
3. Release ENTER; this starts Auto-adjust.

If Auto-adjust is successful, the parameters will be stored automatically and the positioner will revert to operating mode 1.1.

If an error occurs during Auto-adjust, the process will be terminated with an error message.

Perform the following steps if an error occurs:

1. Press and hold down operating button ARROW UP or ARROW DOWN for approximately three seconds.

   The unit will switch to the operating level, mode 1.3 (manual adjustment within the measuring range).
2. Check mechanical mounting in accordance with Mechanical Mounting on page 14 and repeat the standard automatic adjustment.

* The zero position is determined automatically and saved during standard automatic adjustment, counter-clockwise (CTCLOCKW) for linear actuators and clockwise (CLOCKW) for rotary actuators.

SHOPVALVES
GLOBAL VALVE SOLUTIONS | 阀门易购

SHOPVALVES
GLOBAL VALVE SOLUTIONS | 阀门易购

4.11 Sample parameters

'Change the zero position of the LCD display from clockwise (CLOCKW) to counter-clockwise limit stop (CTCLOCKW)'

Initial situation: the positioner is in bus operation on the operating level.

1. Switching to the configuration level:

- Press and hold down ARROW UP and ARROW DOWN simultaneously,
- additionally quickly press and release ENTER,
- Wait for the countdown to go from 3 to 0,
- Release ARROW UP and ARROW DOWN.

The following is now shown in the display:

2. Switching to parameter group 3:

- Press and hold down MODE and ENTER simultaneously,
- additionally quickly press and release ARROW UP 2×,

The following is now shown in the display:

- Release MODE and ENTER.

The following is now shown in the display:

SHOPVALVES
GLOBAL VALVE SOLUTIONS | 阀门易购

SHOPVALVES
GLOBAL VALVE SOLUTIONS | 阀门易购

3. Selecting parameter 3.2:

- Press and hold downMODE, additionally quickly press and release ARROW UP 2×,

The following is now shown in the display:

- Release MODE.

4. Changing parameter settings:

- Quickly press and release ARROW UP to select CTCLOCKW.

5. Switching to parameter 3.3 (Return to operating level) and saving the new settings:

- Press and hold down MODE,
- additionally quickly press and release ARROW UP 2×,

The following is now shown in the display:

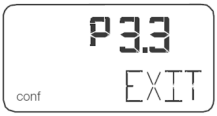

- Release MODE,
- Quickly press and release ARROW UP to select NV_SAVE,
- Press ENTER and hold down until the countdown goes from 3 to 0.

The new parameter setting is saved and the positioner automatically returns to the operating level. It continues in the operating mode that was active prior to the configuration level being called up.

4.12 Setting the option modules

Setting the mechanical position indication

1. Loosen the screws for the housing cover and remove it.
2. Rotate the position indicator on the shaft to the desired position.
3. Attach the housing cover and screw it onto the housing. Tighten the screws so that they are hand-tight.
4. Attach the symbol label to mark the minimum and maximum valve positions on the housing cover.

Note: The labels are located on the inside of the housing cover.

SHOPVALVES
GLOBAL VALVE SOLUTIONS | 阀门易购

SHOPVALVES
GLOBAL VALVE SOLUTIONS | 阀门易购

4.13 Setting the mechanical limit switch with proximity switches

1. Loosen the screws for the housing cover and remove it.

CAUTION
Risk of injury!
The device includes slot sensors with sharp edges.

- Adjust the metal tags using a screwdriver only!

2. Set the upper and lower switching points for binary feedback as follows:
   - Select the 'Manual Adjustment' operating mode and move the final control element by hand into the lower switching position.
   - Using a screwdriver, adjust the metal tag of proximity switch 1 (lower contact) on the axis until contact is made, i. e., just before it is inserted in the proximity switch. The slot sensor enters proximity switch 1 when the feedback shaft is rotated clockwise (as viewed from the front).
   - Move the final control element by hand into the upper switching position.
   - Using a screwdriver, adjust the metal tag of proximity switch 2 (upper contact) on the axis until contact is made, i. e., just before it is inserted in the proximity switch. The slot sensor enters proximity switch 2 when the feedback shaft is rotated counter-clockwise (as viewed from the front).
3. Attach the housing cover and screw it onto the housing.
4. Tighten the screws so that they are hand-tight.

4.14 Setting the mechanical limit switch with 24 V micro-switches

1. Loosen the screws for the housing cover and remove it.
2. Select the 'Manual Adjustment' operating mode and move the final control element by hand into the desired switching position for contact 1.
3. Set maximum contact (1, lower washer).
   Fasten the upper washer with the special adjustment retainer and rotate the lower washer manually.
4. Select the 'Manual Adjustment' operating mode and move the final control element by hand into the desired switching position for contact 2.
5. Set minimum contact (2, upper washer);
   Fasten the lower washer with the special adjustment retainer and rotate the upper washer manually.
6. Connect the microswitch.
7. Attach the housing cover and screw it on to the housing.
8. Tighten the screws so that they are hand-tight.

SHOPVALVES
GLOBAL VALVE SOLUTIONS | 阀门易购

SHOPVALVES
GLOBAL VALVE SOLUTIONS | 阀门易购

5. Operation

5.1 Parameterization of the device

5.1.1 Menu navigation

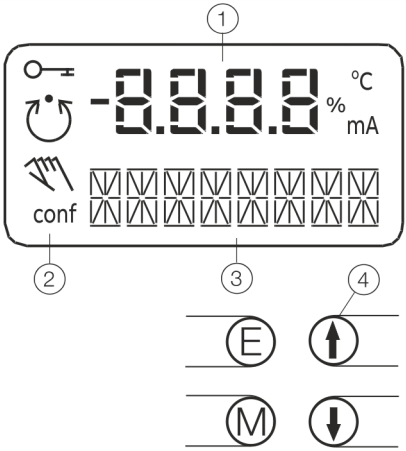

Fig. 23

1 Value display with unit

2 Symbol display

3 Designator display

4 Operating buttons for menu navigation

5.1.2 Value display with unit

This 7-segment display with four digits indicates parameter values or parameter reference numbers. For values, the physical unit (°C, %, mA) is also displayed.

SHOPVALVES
GLOBAL VALVE SOLUTIONS | 阀门易购

SHOPVALVES
GLOBAL VALVE SOLUTIONS | 阀门易购

5.1.3 Current Status display

This 14-segment display with eight digits indicates the designators of the parameters with their status, of the parameter groups, and of the operating modes.

Symbol	Description
	Operation or access is restricted.
	Control loop is active. The symbol is displayed when the positioner is in operating mode 1.0 CTRL_ADP (adaptive control) or 1.1 CTRL_FIX (fixed control) at operating level. On the configuration level there are test functions for which the controller will be active as well. The control loop symbol will also be displayed when these functions are active.
	Manual adjustment. The symbol is displayed when the positioner is in operating mode 1.2 MANUAL (manual adjustment within the stroke range) or 1.3 MAN_SENS (manual adjustment within the measuring range) at operating level. At configuration level, manual adjustment is active when setting the valve range limits (parameter group 6 MIN_VR (min. of valve range) and 6 MAX_VR (max. of valve range)). The symbol will also be displayed when these parameters are being set.
conf	The configuration icon indicates that the positioner is at the configuration level. The control operation is inactive.

The four operating buttons ENTER, MODE, ARROW UP and ARROW DOWN are pressed individually or in certain combinations according to the function desired.

5.1.4 Operating button functions

Control button	Meaning
ENTER	•Acknowledge message •Start an action •Save in the non-volatile memory
MODE	• Choose operating mode (operating level) • Select parameter group or parameter (configuration level)
↑	UP direction button
↓	DOWN direction button
Press and hold all four buttons for 5 s	Reset

5.1.5 Menu levels

The positioner has two operating levels.

- **Operating level**

On the operating level the positioner operates in one of four possible operating modes (two for automatic control and two for manual mode). Parameters cannot be changed or saved on this level.

- **Configuration level**

On this level most of the parameters of the positioner can be changed locally. The PC is required to change the limit values for the movement counter, the travel counter, and the user-defined characteristic curve.
On the configuration level the active operating mode is deactivated. The I/P module is in neutral position. The control operation is inactive

SHOPVALVES
GLOBAL VALVE SOLUTIONS | 阀门易购

SHOPVALVES
GLOBAL VALVE SOLUTIONS | 阀门易购

5.2 HART Parameter Overview

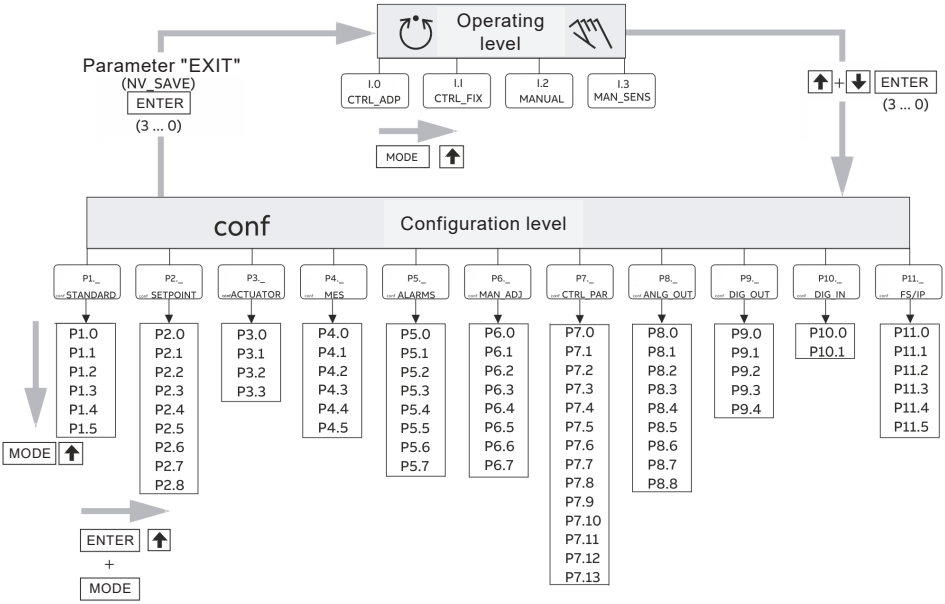

Fig. 24

SHOPVALVES
GLOBAL VALVE SOLUTIONS | 阀门易购

SHOPVALVES
GLOBAL VALVE SOLUTIONS | 阀门易购

5.2.1 Parameter description HART

Parameter	Display	Function		Possible parameter setting	Unit	Factory setting
P1._	STANDARD					
P1.0	ACTUATOR	Actuator type	Actuator type	LINEAR, ROTARY	---	LINEAR
P1.1	AUTO_ADJ	Automatic adjustment	Autoadjust	Function	---	---
P1.2	ADJ_MODE	Auto adjust mode	Automatic adjustment mode	FULL, STROKE,CTRL_PAR, ZERO_POS, LOCKED		FULL
P1.3	TEST	Test	Test	Function	---	INACTIVE
P1.4	EXIT	Return	Return to operating level	Function	---	NV_SAVE
P2._	SETPOINT					
P2.0	MIN_RGE	Min setpoint range	Min. setpoint range	4.0 to 18.4	mA	4.0
P2.1	MAX_RGE	Max setpoint range	Max. setpoint range	20.0 to 5.6	mA	20.0
P2.2	CHARACT	Charact. curve	Characteristic curve	LINEAR, 1:25, 1:50, 25:1, 50:1, USERD	---	LINEAR
P2.3	ACTION	Valve action	Direction of action	DIRECT, REVERSE	---	DIRECT
P2.4	SHUT_CLS	Shut-off value 0%	Shut-off value 0 %	OFF, 0.1 to 45.0	%	1.0
P2.5	SHUT_OPN	Shut off value 100%	Shut-off value 100%	55.0 to 100.0, OFF	%	OFF
P2.6	RAMP UP	Set point ramp, up	Setpoint ramp (up)	OFF, 0 to 200	---	OFF
P2.7	RAMP DN	Set point ramp, down	Setpoint ramp (down)	OFF, 0 to 200	---	OFF
P2.8	EXIT	Return	Return to operating level	Function	---	NV_SAVE
P3._	ACTUATOR					
P3.0	MIN_RGE	Min. of stroke range	Operating range, min.	0.0 to 90.0	%	0.0
P3.1	MAX_RGE	Max. of stroke range	Operating range, max.	100.0 to 10.0	%	100
P3.2	ZERO_POS	Zero position	Zero position	CLOCKWISE, CTCLOCKWISE	---	CTCLOCKWISE
P3.3	EXIT	Return	Return to operating level	Function	---	NV_SAVE

Parameter description HART continued on next page

SHOPVALVES
GLOBAL VALVE SOLUTIONS | 阀门易购

SHOPVALVES
GLOBAL VALVE SOLUTIONS | 阀门易购

5.2.1 Parameter description HART (continued)

Parameter	Display	Function		Possible parameter setting	Unit	Factory setting
P4._	MESSAGES					
P4.0	TIME_OUT	Control time out	Dead band time limit	OFF, to 200	---	OFF
P4.1	POS_SW1	Position switch 1	Switching point SW1	0.0 to 100.0	%	0.0
P4.2	POS_SW2	Position switch 2	Switching point SW2	0.0 to 100.0	%	100.0
P4.3	SW1_ACTV	Switchpoint 1 enable	Active direction SW1	FALL_BEL, EXCEED	---	FALL_BEL
P4.4	SW2_ACTV	Switchpoint 2 enable	Active direction SW2	FALL_BEL, EXCEED	---	EXCEED
P4.5	EXIT	Return	Return to operating level	Function	---	NV_SAVE
P5._	ALARMS					
P5.0	LEAKAGE	Leakage detection	Leakage to actuator	ACTIVE, INACTIVE	---	INACTIVE
P5.1	SP_RGE	Setpoint rng monitor	Outside the setpoint range	ACTIVE, INACTIVE	---	INACTIVE
P5.2	SENS_RGE	Sens. range monitor	Operating range exceeded	ACTIVE, INACTIVE	---	INACTIVE
P5.3	CTRLER	Controller monitor	Controller inactive	ACTIVE, INACTIVE	---	INACTIVE
P5.4	TIME_OUT	Control time out	Dead band time limit	ACTIVE, INACTIVE	---	INACTIVE
P5.5	STRK_CTR	Stroke counter	Movement counter	ACTIVE, INACTIVE	---	INACTIVE
P5.6	TRAVEL	Travel counter	Travel counter	ACTIVE, INACTIVE	---	INACTIVE
P5.7	EXIT	Return	Return to operating level	Function	---	NV_SAVE
P6._	MAN_ADJ					
P6.0	MIN_VR	Min. valve range	Operating range, min.	0.0 to 100.0	%	0
P6.1	MAX_VR	Max. valve range	Operating range, max.	0.0 to 100.0	%	100
P6.2	ACTUATOR	Actuator type	Actuator type	LINEAR, ROTARY	---	LINEAR
P6.3	SPRNG_Y2	Spring action (Y2)	Spring action (Y2)	CLOCKWISE, CTCLOCKWISE	---	CTCLOCKWISE
P6.4	DANG_DN	Dead angle close	Dead angle 0 %	0.0 to 45.0	%	0.0
P6.5	DANG_UP	Dead angle open	Dead angle 100%	55.0 to 100.0	%	100.0
P6.6	EXIT	Return	Return to operating level	Function	---	NV_SAVE

SHOPVALVES
GLOBAL VALVE SOLUTIONS | 阀门易购

SHOPVALVES
GLOBAL VALVE SOLUTIONS | 阀门易购

5.2.1 Parameter description HART (continued)

Parameter	Display	Function		Possible parameter setting	Unit	Factory setting
P7._	CTRL_PAR					
P7.0	KP UP	KP value, up	KP value (up)	0.1 to 120.0	---	5.0
P7.1	KP DN	KP value, down	KP value (down)	0.1 to 120.0	---	5.0
P7.2	TV UP	TV value, up	TV value (up)	10 to 450	---	200
P7.3	TV DN	TV value, down	TV value (down)	10 to 450	---	200
P7.4	Y-OFS UP	Y offset, up	Y offset (up)	0.0 to 100.0	%	48.0
P7.5	Y-OFS DN	Y offset, down	Y offset (down)	0.0 to 100.0	%	48.0
P7.6	TOL_BAND	Tolerance band (zone)	Tolerance band (zone)	0.3 to 10.0	%	1.5
P7.7	DEADBAND	Deadband	Dead band	0.10 to 10.00	%	0.1
P7.8	DB_APPR	Deadband Approach	Dead-band approach	SLOW, MEDIUM, FAST		
P7.9	TEST	Test	Test	Function	---	INACTIVE
P7.10	EXIT	Return	Return to operating level	Function	---	NV_SAVE
P8._	ANLG_OUT					
P8.0	MIN_RGE	Min. range	Min. current range	4.0 to 18.4	mA	4.0
P8.1	MAX_RGE	Max. range	Max. current range	20.0 to 5.7	mA	20.0
P8.2	ACTION	Action	Direction of action of characteristic curve	DIRECT, REVERSE	---	DIRECT
P8.3	ALARM	Alarm current	Alarm message	HIGH_CUR, LOW_CUR	---	HIGH_CUR
P8.4	RB_CHAR	Readback character.	Converted characters	DIRECT, RECALC		DIRECT
P8.5	TEST	Test	Test	Function	---	NONE
P8.6	EXIT	Return	Return to operating level	Function	---	---

Parameter description HART continued on next page

SHOPVALVES
GLOBAL VALVE SOLUTIONS | 阀门易购

SHOPVALVES
GLOBAL VALVE SOLUTIONS | 阀门易购

5.2.1 Parameter description HART (continued)

Parameter	Display	Function		Possible parameter setting	Unit	Factory setting
P9._	DIG_OUT					
P9.0	ALRM_LOG	Alarm logic	Alarm output logic	ACTIVE_HI, ACTIVE_LO	---	ACTIVE_HI
P9.1	SW1_LOG	Switchpoint 1 logic	Logic SW1	ACTIVE_HI, ACTIVE_LO	---	ACTIVE_HI
P9.2	SW2_LOG	Switchpoint 2 logic	Logic SW2	ACTIVE_HI, ACTIVE_LO	---	ACTIVE_HI
P9.3	TEST	Test	Test	Function	---	NONE
P9.4	EXIT	Return	Return to operating level	Function	---	NV_SAVE
P10._	DIG_IN					
P10.0	FUNCTION	Function select	Function selection	NONE, POS_0 %, POS_100 %, POS_HOLD	---	NONE
P10.1	EXIT	Return	Return to operating level	Function	---	---
P11._	FS/IP					
P11.0	FAIL_POS	Save position	Safe position	ACTIVE, INACTIVE	---	INACTIVE
P11.1	FACT_SET	Factory setting	Factory setting	Function	---	START
P11.2	IP-TYP	I/P module type	Type of I/P module	NO_F_POS,F_SAFE_1,F_SAFE_2,	S	30
P11.3*	IP_COMP	IP compensation	IP compensation	ON, OFF	---	ON
P11.4	HART_REV	HART revision	HART revision	5; 7	---	5
P11.5	EXIT	Return	Return to operating level	Function	---	NV_SAVE

*Activation by Spirax Sarco Service only

Note
For detailed information on the parameterization of the device, consult the associated configuration and parameterization instructions.

SHOPVALVES
GLOBAL VALVE SOLUTIONS | 阀门易购

SHOPVALVES
GLOBAL VALVE SOLUTIONS | 阀门易购

5.3 SP7-11/12 parameter overview

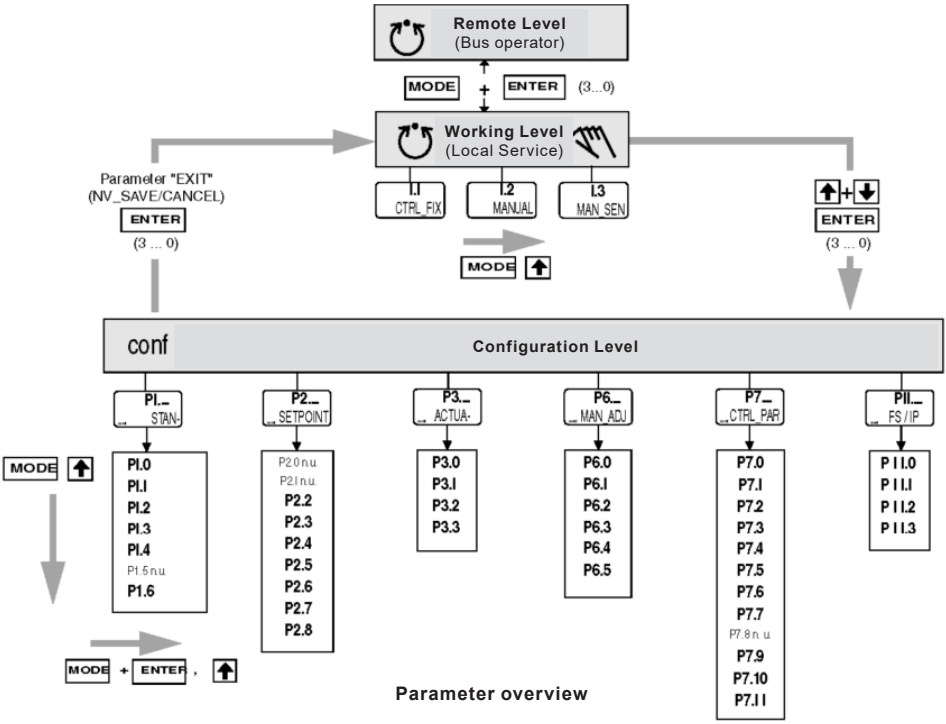

Fig. 25

SHOPVALVES
GLOBAL VALVE SOLUTIONS | 阀门易购

SHOPVALVES
GLOBAL VALVE SOLUTIONS | 阀门易购

5.2.3 SP7-11/12 Parameter description

Parameter	Display	Function		Possible parameter setting	Unit	Factory setting
P1._	STANDARD					
P1.0	ACTUATOR	Actuator type	Actuator type	LINEAR, ROTARY	---	LINEAR
P1.1	AUTO_ADJ	Automatic adjustment	Autoadjust	Function	---	---
P1.2	TOL_BAND	Tolerance band	Tolerance band	0.30 bis 10.00	%	0.30
P1.3	DEADBAND	DEAD BAND	Dead band	0.10 bis 10.00	%	0.10
P1.4	TEST	Test	Test	function	---	---
P1.5*	ADRESS	Bus address		1 bis 126	---	126
P1.6	EXIT	Return	Return to operating level	Function	---	---
P2._	SETPOINT					
P2.0					---	---
P2.1					---	---
P2.2	CHARACT	Charact. curve	Characteristic curve	LINEAR, 1:25, 1:50, 25:1, 50:1, USERD	---	LINEAR
P2.3	ACTION	Valve action	Direction of action	DIRECT, REVERSE	---	DIRECT
P2.4	SHUT_CLS	Shut-off value 0%	Shut-off value 0 %	OFF, 0.1 to 45.0	%	1.0
P2.5	RAMP_UP	Set point ramp, up	Setpoint ramp (up)	0.1 to 999.9	Sec	OFF
P2.6	RAMP DN	Set point ramp, down	Setpoint ramp (down)	0.1 to 999.9	Sec	OFF
P2.7	SHUT_OPN	Shut off value 100%	Shut-off value 100%	OFF, 80.0 to 100	%	OFF
P2.8	EXIT	Return	Return to operating level	Function	---	---
P3._	ACTUATOR					
P3.0	MIN_RGE	Min. of stroke range	Operating range, min.	0.0 to 100.00	%	0.0
P3.1	MAX_RGE	Max. of stroke range	Operating range, max.	0.0 to 100.00	%	100
P3.2	ZERO_POS	Zero position	Zero position	CLOCKWISE, CTCLOCKWISE	---	CTCLOCKWISE
P3.3	EXIT	Return	Return to operating level	Function	---	NV_SAVE
P4._, P5._						
P6._	MAN_ADJ					
P6.0	MIN_VR	Min. valve range	Operating range, min.	0.0 to 100.0	%	0
P6.1	MAX_VR	Max. valve range	Operating range, max.	0.0 to 100.0	%	100
P6.2	ACTUATOR	Actuator type	Actuator type	LINEAR, ROTARY	---	LINEAR
P6.3	SPRNG_Y2	Spring action (Y2)	Spring action (Y2)	CLOCKWISE, CTCLOCKWISE	---	CTCLOCKWISE

SHOPVALVES
GLOBAL VALVE SOLUTIONS | 阀门易购

SHOPVALVES
GLOBAL VALVE SOLUTIONS | 阀门易购

5.2.4 SP7-11/12 Parameter description

Parameter	Display	Function		Possible parameter setting	Unit	Factory setting
P6.4	ADJ_MODE	Auto adjust mode	Dead angle 0 %	FULL, STROKE, CTRL_PAR, ZERO_POS, LOCKED	---	FULL
P6.5	EXIT	Return	Return to operating level	Function	---	NV_SAVE
P7._	CTRL_PAR					
P7.0	KP UP	KP value, up	KP value (up)	0.1 to 120.0	---	1.0
P7.1	KP DN	KP value, down	KP value (down)	0.1 to 120.0	---	1.0
P7.2	TV UP	TV value, up	TV value (up)	10 to 450	msec	100
P7.3	TV DN	TV value, down	TV value (down)	10 to 450	msec	100
P7.4	GOPULSUP	Go pulse up	---	0 to 200	msec	0
P7.5	GOPULSDOWN	Go pulse, down		0 to 200	msec	0
P7.6	Y-OFSUP	Y offset up	Y offset up	Y-Min to 100.0	%	40.0
P7.7	Y-OFSDN	Y offset down	Y offset down	Y-Min to 100.0	%	40.0
P7.8					---	---
P7.9	TOL_BAND	tolerance band (zone)	Tolerance band (zone)	0.3 to 10.0	%	0.8
P7.10	TEST	Test	Test	Function	---	INACTIVE
P7.11	EXIT	Return	Return to operating level	Function	---	NV_SAVE
P8._, P9._, P10._						
P11._	FS/IP					
P11.0	FAIL_POS	Safe postiton	Safe position	ACTIVE, INACTIVE	---	INACTIVE
P11.1	FACT_SET	Factory setting	Factory setting	Function	---	---
P11.2	IP-TYP	I/P module type	Type of I/P module	NO_F_POS,F_SAFE_1,F_SAFE_2, F_FREEZE1, F_FREEZE2	---	NO_F_POS
P11.3	EXIT	Return	Return to operating level	Function	---	---

*Activation by Spirax Sarco Service only

Note:
For detailed information on the parameterization of the device, consult the associated configuration and parameterization instructions.

SHOPVALVES
GLOBAL VALVE SOLUTIONS | 阀门易购

SHOPVALVES
GLOBAL VALVE SOLUTIONS | 阀门易购

6. Troubleshooting

6.1 Error codes

Error code	Possible cause	Impact	Troubleshooting
ERROR 10	The supply voltage was interrupted for at least 20 ms. (This error is displayed after resetting the device to indicate the reason for the reset.)	-	Check the power source and the wiring.
ERROR 11	The supply voltage has fallen below the minimum voltage.	The actuator is moved to the safe position. After approx. 5 seconds, the positioner is automatically reset and starts up again with the message ERROR 10. If a local communication interface (LCI) is plugged in, the device will enter the operating mode LCI supply.	Check the power source and the wiring.
ERROR 12	The position is outside the measuring range. Possible reason is a malfunction in the position sensor.	In control mode: •The actuator is moved to the safe position. On the configuration level: • The output is set to neutral until a button is pressed. After approx. 5 seconds the positioner is automatically reset in control mode and on the configuration level.	Check the mounting.
ERROR 13	Invalid input current. This display indicates when the setpoint signal is overridden. The actuator is moved to the safe position.	-	Check the power source and the wiring.
ERROR 20	No access possible to the data in the EEPROM.	The actuator is moved to the safe position. After approx. 5 seconds, the positioner is automatically reset. Attempts are made to restore the data. This compensates for intermittent errors in the communication environment with the EEPROM.	If there is still no access to the EEPROM data after resetting the device, load the factory settings. If the error still persists, the device must be returned for repair to the manufacturer.

Error codes continued on next page

SHOPVALVES
GLOBAL VALVE SOLUTIONS | 阀门易购

SHOPVALVES
GLOBAL VALVE SOLUTIONS | 阀门易购

6.1 Error codes (continued)

Error code	Possible cause	Impact	Troubleshooting
ERROR 21	Error while processing the measured values, pointing to an error in the working data (RAM).	The actuator is moved to the safe position. After approx. 5 seconds, the positioner is automatically reset and the RAM is reinitialized.	If the error persists even after the positioner has been reset, the device will need to be returned to the manufacturer for repair.
ERROR 22	Error during the table processing, pointing to an error in the working data (RAM).	The actuator is moved to the safe position. After approx. 5 seconds, the positioner is automatically reset and the RAM is reinitialized.	If the error persists even after the positioner has been reset, the device will need to be returned to the manufacturer for repair.
ERROR 23	Error when verifying the checksum of the configuration data (RAM).	The actuator is moved to the safe position. After approx. 5 seconds, the positioner is automatically reset and the RAM is reinitialized.	If the error persists even after the positioner has been reset, the device will need to be returned to the manufacturer for repair.
ERROR 24	Error in the processor function registers (RAM).	The actuator is moved to the safe position. After approx. 5 seconds, the positioner is automatically reset and the RAM is reinitialized.	If the error persists even after the positioner has been reset, the device will need to be returned to the manufacturer for repair.
ERROR 50 to 99	Internal error.	The actuator is moved to the safe position. After approx. 5 seconds, the positioner is automatically reset.	If the error can be reproduced and occurs in the same position after resetting, the device must be returned for repair to the manufacturer.

SHOPVALVES
GLOBAL VALVE SOLUTIONS | 阀门易购

SHOPVALVES
GLOBAL VALVE SOLUTIONS | 阀门易购

6.2 SP7-11/12 Error codes

Error code	Possible cause	Impact	Troubleshooting
NV_ERROR	Defective memory chip	Device does not boot up.	Return the device for repair.
TIMEOUT	Automatic adjustment function lasts too long.	Automatic adjustment function is aborted.	Increase the supply pressure or use boosters.
OUTOFRNG	Mounting conditions not correct. Position outside sensor range.	Autoadjust function is aborted.	Check mounting conditions.
CALC_ERR	1 Inconsistent data, e.g., low value > than high value, or incorrect configuration. 2 Data cannot be saved locally, as PROFIBUS saves data in the background.	1 Automatic adjustment is aborted. 2 Saving is not possible.	1 Correct values or load factory settings. 2 Try again at a later point.
NO_F_POS	The device is not in the safe position.	-	Move the device to the safe position.
ERROR	Alarm message (can only be read out using the DTM). • Temperature alarm • Automatic adjustment has failed • Zero point has shifted • Device reset • Maintenance required • Motion counter limit value up-scaled • Travel counter limit value up-scaled • Limit switch 1 up-scaled • Limit switch 2 up-scaled • Position outside operating range • Position outside sensor range • Invalid set point • Local operating mode requested • Local operating mode active • Simulation active • Controller deactivated.	See DTM online help	See DTM online help
NO_COMM	No PROFIBUS communication	No PROFIBUS communication	Check bus address and status bit (128)
SENS_ERR	Position sensor defective	Device moves to safety position	Return the device for repair
MEM_ERR	Defective memory chip	Device does not boot up	Return the device for repair.

SHOPVALVES
GLOBAL VALVE SOLUTIONS | 阀门易购

SHOPVALVES
GLOBAL VALVE SOLUTIONS | 阀门易购

6.3 Alarm codes

Error code	Possible cause	Impact	Troubleshooting
ALARM 1	Leakage between positioner and actuator	Depending on how well the leakage can be compensated, small control actions are required at regular intervals.	Check the piping.
ALARM 2	The setpoint current is outside the permissible range, i.e. it is < 3.8 mA or > 20.5 mA.	-	Check the power source.
ALARM 3	Alarm of the zero monitor. The zero position has shifted by more than 4 %.	– In control mode, a position outside the valve range can only be reached by moving to the limit stops, as the setpoint is limited from 0 to 100 %	Correct the mounting.
ALARM 4	Controlling is inactive, because the device does not operate in control mode or the binary input is active.	The controller does not follow the setpoint.	Switch to control mode or switch off the binary input.
ALARM 5	Positioning timed out. The settling time needed exceeds the configured stroke time.	None, or adaptive control is performed (in adaptive mode).	Ensure that •the actuator is not blocked. •the supply air pressure is adequately high. •the specified time limit is higher than 1.5 times the longest stroke time of the actuator. If adaption cannot run uninterruptedly for an actuator, adaption should be switched on until the alarm does not occur anymore during controlling actions.
ALARM 6	The defined limit value for the stroke counter has been exceeded.	-	Reset the counter (only possible via a connected PC with suitable software).
ALARM 7	The specified limit value for the travel counter has been exceeded.	-	Reset the counter (only possible via a connected PC with suitable software).

SHOPVALVES
GLOBAL VALVE SOLUTIONS | 阀门易购

SHOPVALVES
GLOBAL VALVE SOLUTIONS | 阀门易购

6.4 Message codes

Message codes	Message description
BREAK	Action stopped by operator.
CALC_ERR	Error during plausibility check.
COMPLETE	Action completed, acknowledgment required.
EEPR_ERR	Memory error, data could not be saved.
FAIL_POS	Safe position is active, action cannot be executed.
NO_F_POS	Safe position required, but not active.
NO_SCALE	Valve range limits have not yet been determined; therefore, partial Auto Adjust cannot be run.
NV_SAVE	Data is saved in the non-volatile memory.
OUTOFRNG	Measuring range is exceeded, Auto Adjust was automatically stopped.
LOAD	Data (factory settings) are being loaded.
RNG_ERR	Less than 10 % of the measuring range is used.
RUN	Action running.
SIMUL	Simulation has been started externally from a PC via HART protocol; switch outputs, alarm output and analog position feedback are no longer influenced by the process.
SPR_ERR	Actual spring action is different from the adjusted one.
TIMEOUT	Time-out; parameter could not be determined within two minutes; Auto-adjust was automatically stopped.

7. Maintenance

SP7 Series Filter Kit – 3440580

SHOPVALVES
GLOBAL VALVE SOLUTIONS | 阀门易购

SHOPVALVES
GLOBAL VALVE SOLUTIONS | 阀门易购

8. Approvals

ATEX

Rating: ATEX II 2 G Ex ib IIC T6, T4…T1 Gb
Certification number: TÜV 21 ATEX 295206 X
Ambient temperature:
T6: −40°C < Ta < 40 °C
T4 ... T1: −40°C < Ta < 85 °C

IECEx

Rating: IECEx Ex ib IIC T6, T4…T1 Gb
Certification number: IECEx TUN 21.0019X
Ambient temperature:
T6: −40°C < Ta < 40 °C
T4 ... T1: −40°C < Ta < 85 °C

NEPSI

Rating: NEPSI Ex ib IIC T4/T6 Gb
Certification number: GYJ22.1767X
Ambient temperature:
T6/T85: −40°C < Ta < 40 °C
T4/125: −40°C < Ta < 85 °C

UKEX

Rating: UKEX Ex ib IIC T6, T4…T1 Gb
Certification number: EMA22UKEX0013X
Ambient temperature:
T6: −40°C < Ta < 40 °C
T4 ... T1: −40°C < Ta < 85 °C

INMETRO

Rating: INMETRO Ex ib IIC T6, T4 ... T1 Gb
Rating: INMETRO Ex ib IIC T6, T4 ... T1 Gb
Certification number: TÜV 25.1034 X
Ambient temperature:
T6: -40 °C < T_{amb} < 40 °C
T4... T1: -40 °C < T_{amb} < 85 °C

SHOPVALVES
GLOBAL VALVE SOLUTIONS | 阀门易购

SHOPVALVES
GLOBAL VALVE SOLUTIONS | 阀门易购

9. Declaration of conformity

spiraxsarco.com

spirax sarco EN

EU DECLARATION OF CONFORMITY

Apparatus model/Product: **Smart Positioners**
SP7-10
SP7-11
SP7-12

Name and address of the manufacturer or his authorised representative: **Spirax Sarco Ltd**,
Runnings Road
Cheltenham
GL51 9NQ
United Kingdom

This declaration of conformity is issued under the sole responsibility of the manufacturer.

The object of the declaration described above is in conformity with the relevant Union harmonisation legislation:

2014/30/EU EMC Directive
2014/34/EU ATEX Directive

References to the relevant harmonised standards used or references to the other technical specifications in relation to which conformity is declared:

EMC Directive EN 61326-1:2013

ATEX Directive EN IEC 60079-0:2018
EN 60079-11:2012

Where applicable, the notified body:

Notified Body	*number*	*Performed*	*Certificate*
Element Materials Technology Rotterdam B.V. Voorerf 18, 4824 GN Breda Netherlands	2812	*Issue of Quality Assurance Notification*	TRAC13QAN0002
TÜV NORD CERT GmbH Am TÜV 1, 30519 Hannover Germany	0044	*Issue of EC Type examination certificate*	TÜV 21 ATEX 295206 X

Additional information:

Ex II 2 G Ex ib IIC T6, T4 ... T1 Gb

Signed for and on behalf of: Spirax Sarco Ltd,

(signature):

(name, function): M Sadler
Head of Engineering Steam Business Development

(place and date of issue): Cheltenham
2022-03-14

GNP237-EU-C/04 issue 1 (EN)

SHOPVALVES
GLOBAL VALVE SOLUTIONS | 阀门易购

SHOPVALVES
GLOBAL VALVE SOLUTIONS | 阀门易购

spiraxsarco.com

spirax sarco UK CA

DECLARATION OF CONFORMITY

Apparatus model/Product: **Smart Positioner**
SP7-10
SP7-11
SP7-12

Name and address of the manufacturer or his authorised representative: **Spirax Sarco Ltd**,
Runnings Road
Cheltenham
GL51 9NQ
United Kingdom

This declaration of conformity is issued under the sole responsibility of the manufacturer.

The object of the declaration described above is in conformity with the relevant statutory requirements of:

SI 2016 No.1091 * **The Electromagnetic Compatibility Regulations 2016**

SI 2016 No.1107 * **The Equipment and Protective Systems Intended for Use in Potentially Explosive Atmospheres Regulations 2016**

*(*As amended by EU Exit Regulations)*

References to the relevant designated standards used or references to the other technical specifications in relation to which conformity is declared:

SI 2016 No.1091 * EN 61326-1:2013

SI 2016 No.1107 * EN IEC 60079-0:2018
EN 60079-11:2012

Where applicable, the approved body:

Approved Body	*number*	*Performed*	*Certificate*
Element Materials Technology Warwick Ltd.	0891	*Issue of Quality Assurance Notification*	EMA21UKQAN0002
Element Materials Technology Warwick Ltd.	0891	*Issue of UK Type examination certificate*	EMA22UKEX0013X

Additional information:

Ex coding: Ex II 2 G Ex ib IIC T6, T4 ... T1 Gb
T6: -40°C ≤ Ta ≤ 40°C; T4...T1: -40°C ≤ Ta ≤ 85°C

Signed for and on behalf of: Spirax Sarco Ltd,

(signature):

(name, function): Neil Morris
Compliance Manager
Steam Business Development Engineering

(place and date of issue): Cheltenham 23 September 2022

GNP237-UK-C/04 issue 1

SHOPVALVES
GLOBAL VALVE SOLUTIONS | 阀门易购

SHOPVALVES
GLOBAL VALVE SOLUTIONS | 阀门易购

SHOPVALVES
GLOBAL VALVE SOLUTIONS | 阀门易购