Local regulations may restrict the use of this product to below the conditions quoted.
In the interests of development and improvement of the product, we reserve the right to change the specification without notice. © Copyright 2024

SP7-10, SP7-11 and SP7-12 Smart Positioners

Description

The SP7-1* smart positioner can control any valve that is actuated by a linear or rotary pneumatic actuator that conforms with NAMUR. It guarantees an exact proportionality between the stroke of the valve and the value of the electrical input signal (mA) into the positioner.
The SP7-1* has a cast aluminium housing that is also treated for outdoor installation. The unit can be mounted onto pneumatic actuators either rotary -57 to 57° or linear -28 to 28°.
The positioner can be supplied without a mounting kit or with a kit for rotary or linear actuators, the type must be specified when ordering.
The positioner can be supplied without a pressure gauge block or with a pressure gauge block, the type must be specified when ordering. The positioner is supplied for a control signal in mA and for an air supply pressure from 1.4 to 6 bar.
The SP7-1* positioner can also be used to reverse the action of the control signal.
The positioner has a local communication interface (LCI) as standard in the SP7-10. Additionally, a 'HART® communication' option for communication via the 20 mA signal is available. Both communications are based on the HART® Protocol. Alternatively, HART®5 or HART®7 are available.
Other available options are the SP7-11 with a PROFIBUS PA module or the SP7-12 with FOUNDATION Fieldbus module.
In addition to its input for the analog position set point, the positioner is equipped with a digital input which can be used to activate control system functions in the device. A digital output allows you to output collective messages (alarms/faults).

Throughout the document SP7-1* is written where the information is relevant to all versions; the SP7-10, SP7-11 and SP7-12. Where the information is specific it will be referenced as the version appropriate.

Approvals

	ATEX rating	II 2 G Ex ib IIC T6, T4...T1 Gb
	CCC (China)	Ex ib IIC T4/T6 Gb
	NEPSI rating	Ex ib IIC T4/T6 Gb

Air supply

The SP7-10 positioner must be provided with a high quality air supply to ISO 8573-1:2010 Class 3:3:3

Applications

The SP7-1* can be used with any actuator that conforms to NAMUR, this includes all of the following Spirax Sarco pneumatic actuators:

BVA300 rotary

PN1600 series

PNS3000 and **PNS4000 series**

PN9000 series

TN2000 series

SHOPVALVES
GLOBAL VALVE SOLUTIONS | 阀门易购

Materials

Part	Material	Finish
Case and cover	Die cast aluminium	Case - Anti-corrosive paint, Black
		Cover - Anti-corrosive paint to RAL9016
Mouting kits	Stainless steel	-
Follower pin cone	Nylon	-

Technical data

Input signal	4-20 mA (split range minimum amplitude 8 mA) or PROFIBUS PA or FOUNDATION Fieldbus
Impedance	Max 485 +/- 15 Ω (for 4-20mA input signal only)
Air supply	1.4 to 6.0 bar
Air quality	ISO 8573-1:2010 Class 3:3:3
Output pressure	0 to 100% supply pressure
Actuator stroke	20 mm to 150 mm or 55 ° to 90 °
Action	Single acting/fail vent/Double acting
Operating temperature	−40 to 85 °C
Air connections	¼" NPT female
Deviation	≤ 0.5 %
Tolerance band	0.3 to 10 %, adjustable
Configurable dead zone	0.1 to 10 %, adjustable for 4-20 mA, HART and PROFIBUS PA, 0.1 to 5 % for FOUNDATION Fieldbus
Resolution (AD-conversion)	> 16,000 steps
Sampling frequency	20 ms (for 4-20 mA, HART and PROFIBUS PA only)
Ambient temperature effect	≤ 0.5 % per 10 K
Reference temperature	20 °C
Influence of vibration	≤ 1 % to 10 g and 80 Hz
Degree of protection	IP65
Weight	Linear mounting kit - 0.78 kg
	Rotary mounting kit - 0.4 kg
	Positioner (without mounting kits or gauge blocks) - 1.7 kg
Basic positioner options	SP7-10 - 4-20 mA or 4-20 mA with HART
	SP7-11 - Profibus PA
	SP7-12 - Foundation fieldbus

SHOPVALVES
GLOBAL VALVE SOLUTIONS | 阀门易购

SHOPVALVES
GLOBAL VALVE SOLUTIONS | 阀门易购

Dimensions (approximate) in mm (and inches)

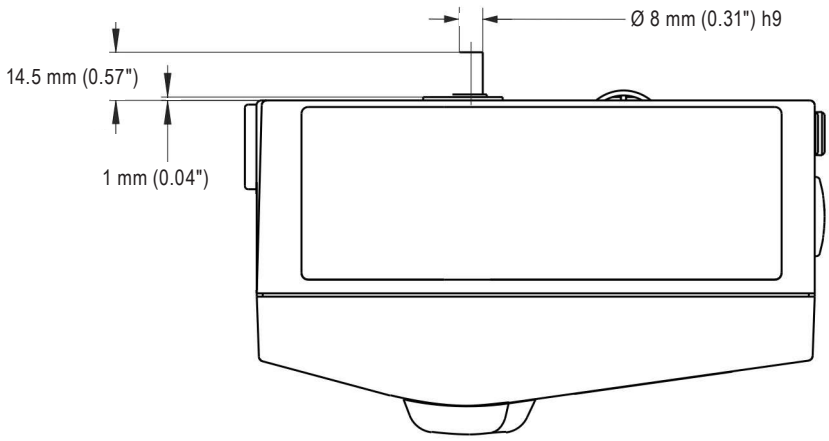

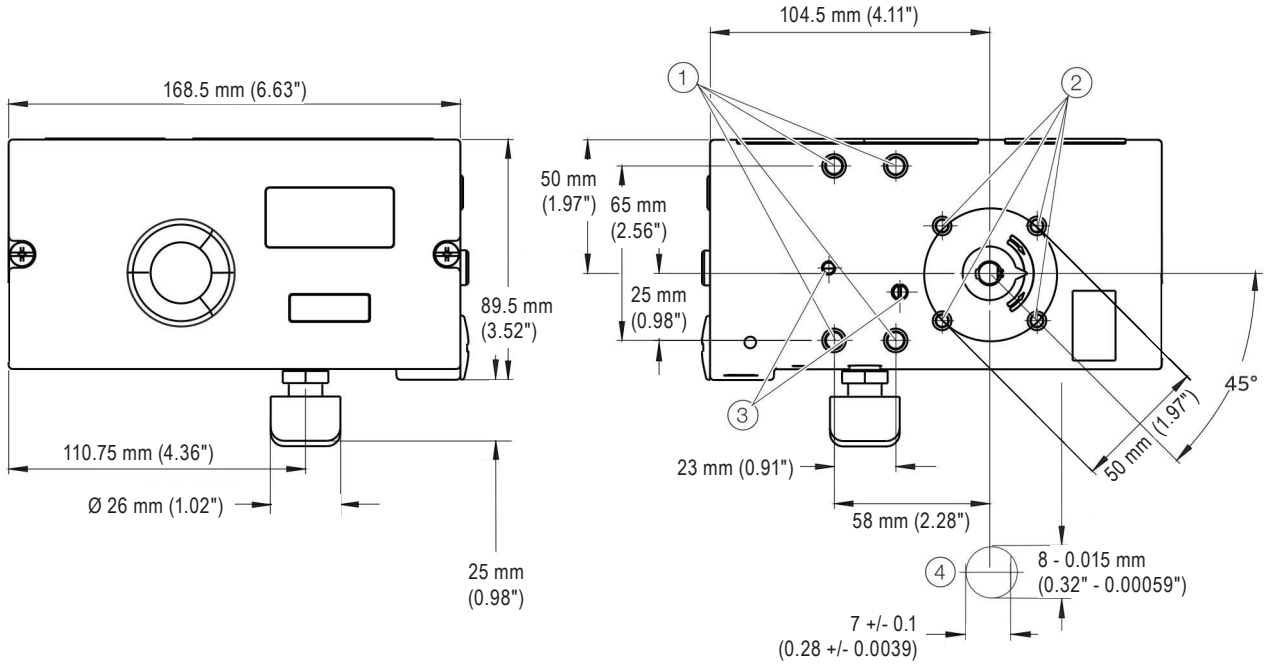

1. Threaded hole M8 (10 mm [0.39"] deep)
2. Threaded hole M6 (8 mm deep [0.31"])
3. Threaded hole M5 x 0.5 (air outputs for direct mount)
4. Sensor shaft (shown larger than scale)

SHOPVALVES
GLOBAL VALVE SOLUTIONS | 阀门易购

SHOPVALVES
GLOBAL VALVE SOLUTIONS | 阀门易购

Dimensions (approximate) in mm (and inches)

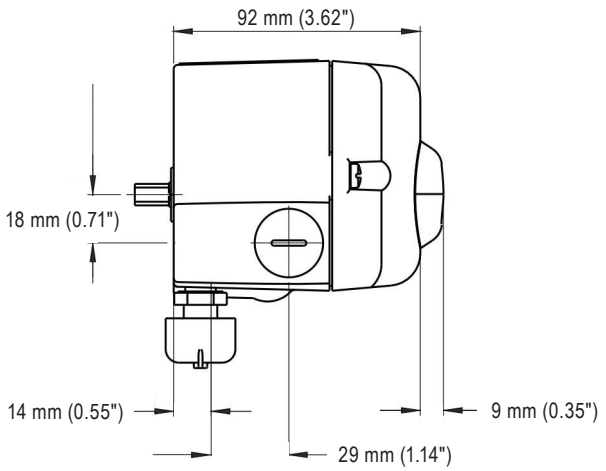

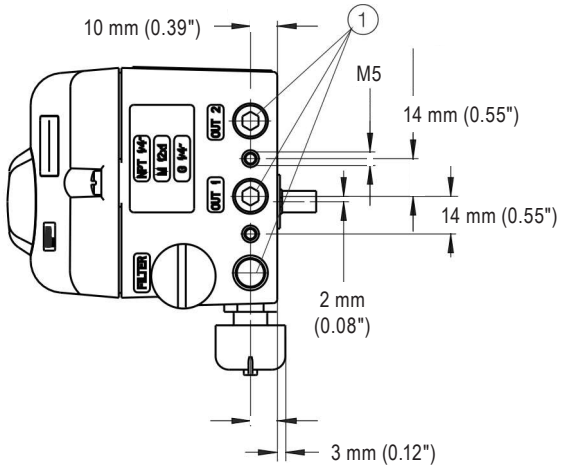

1 Pneumatic connections, NPT ¼ in-18

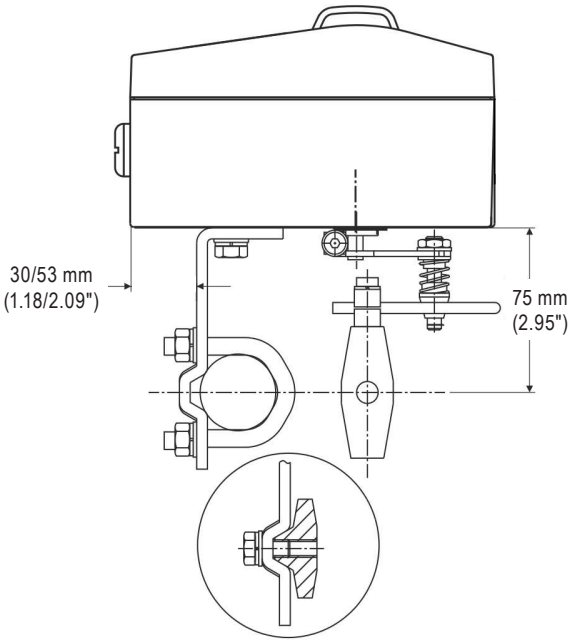

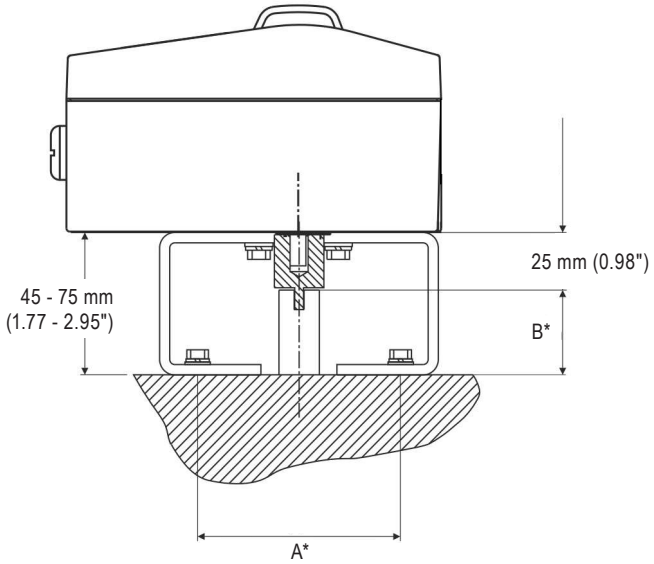

* Dimensions A and B depend on the rotary actuator

Rotary positioner mounting kits

Actuator mounting dimensions	Spirax kit nomenclature
80/20 mm	AKR13
80/30 mm	AKR14
130/30 mm	AKR15
130/50 mm	AKR16

For BVA actuators the AKR14 mounting kit is required.

SHOPVALVES
GLOBAL VALVE SOLUTIONS | 阀门易购

SHOPVALVES
GLOBAL VALVE SOLUTIONS | 阀门易购

Positioner options for SP7-10 - 4-20 mA or 4-20mA with HART

Standard	Case/Mounting	Case made of aluminium, varnished, for mounting to linear actuators acc. DIN/IEC 534/NAMUR or to rotary actuators acc. VDI/VDE 3845	10
		Case made of aluminium, varnished, with mechanical position indicator, for mounting to linear actuators acc. DIN/IEC 534/NAMUR or to rotary actuators acc. VDI/VDE 3845	20
		Remote sensor control unit (Note 1)	70
	Input/Communication Port	Input 4 ... 20 mA, two-wire, with connector plug for LKS adapter	1
		Input 4 ... 20 mA, two-wire, with connector plug for LKS adapter and FSK module for HART communication	2
	Explosion Protection	Without	0
		ATEX II 2 G Ex ib IIC T6, T4...T1 Gb	1
		IECEx Ex ib IIC T6, T4...T1 Gb	5
		NEPSI Ex ib IIC T4/T6 Gb	V
	Output/Safe Position (in case of an electrical power failure)	Single acting, fail safe	1
		Single acting, fail freeze	2
		Double acting, fail safe (Note 2)	4
		Double acting, fail freeze (Note 2)	5
	Connections	Cable: Thread ½-14 NPT, air pipe: Thread ¼-18 NPT	2
		Cable: Thread M20 x 1.5, air pipe: Thread ¼-18 NPT	5
	Option Modules for Analog or Digital Position Feedback	Without	0
		Plug-in module for analog position feedback, signal range 4 ... 20 mA, two-wire	1
		Plug-in module for digital position feedback	3
		Plug-in module for analog position feedback, signal range 4 ... 20 mA, two-wire, and digital position feedback	5
	Optional Mechanical Kit for Digital Position Feedback	Without	00
		Mechanical kit for digital position feedback with proximity switches SJ2-SN (NC or logical 1) (Note 3)	10
		Mechanical kit for digital position feedback with 24 V AC/DC microswitches (change-over contacts) (Note 4)	50
	Design (Varnish/Coding)	Standard	1
		Higher Stiffness + Lower Air Capacity	H
		Protection Class IP 66/NEMA 4X	P
		Increased Corrosion Protection incl. Protection Class IP66	S

Positioner options continued on next page

SHOPVALVES
GLOBAL VALVE SOLUTIONS | 阀门易购

SHOPVALVES
GLOBAL VALVE SOLUTIONS | 阀门易购

Positioner options for SP7-10 - 4-20 mA or 4-20mA with HART (continued)

Optional	Device Identification Label	Stainless steel 18.5 x 65 mm (0.73 x 2.56") (Note 5)	MK1
		Sticker 11 x 25 mm (0.43 x 0.98")	MK3
	Remote Sensor	Basic unit (Note 6)	RS
		Basic unit with position indicator (Note 6)	RD
	Remote Sensor Temperature Range	Extended ambient temperature range -40 ... 100 °C (-40 ... 212 °F) (Note 6)	RT
	Remote Sensor Vibration Resistance	Advanced vibration range 2 g @ 300 Hz (Note 6)	RV
	Remote Sensor Protection Class	Protection class IP 67 (Note 6)	RP
	Remote Sensor Cable	5 m cable enclosed (Note 6)	R5
		10 m cable enclosed (Note 6)	R6

SP7-10

Note 1: With standard characteristic curve, if delivered without remote sensor
Note 2: Not for for integral mounting
Note 3: Only for model with mechanical position indicator
Note 4: Not for explosion protected version and only for model with mechanical position indicator
Note 5: Plain text, max. 16 letters
Note 6: Only with remote sensor control unit

Ordering Code Example:

SP7-10	-	20	1	0	1	5	0	00	1

SHOPVALVES
GLOBAL VALVE SOLUTIONS | 阀门易购

SHOPVALVES
GLOBAL VALVE SOLUTIONS | 阀门易购

Positioner options for SP7-11 - PROFIBUS PA

Standard	Case/Mounting	Case made of aluminium, varnished, for mounting to linear actuators acc. DIN/IEC 534/NAMUR or to rotary actuators acc. VDI/VDE 3845	10
		Case made of aluminium, varnished, with mechanical position indicator, for mounting to linear actuators acc. DIN/IEC 534/NAMUR or to rotary actuators acc. VDI/VDE 3845	20
	Input/Communication Port	PROFIBUS PA	3
	Explosion Protection	Without	0
		ATEX II 2 G Ex ib IIC T6, T4...T1 Gb	3
		IECEx Ex ib IIC T6, T4...T1 Gb	M
		NEPSI Ex ib IIC T4/T6 Gb	V
	Output/Safe Position (in case of an electrical power failure)	Single acting, fail safe	1
		Single acting, fail freeze	2
		Double acting, fail safe	4
		Double acting, fail freeze	5
	Connections	Cable: Thread ½-14 NPT, air pipe: Thread ¼-18 NPT	2
		Cable: Thread M20 x 1.5, air pipe: Thread ¼-18 NPT	5
	Option Module for Shutdown Function	Without	0
	Optional Mechanical Kit for Digital Position Feedback	Without	00
		Mechanical kit for digital position feedback with proximity switches SJ2-SN (NC or logical 1) (Note: 1)	10
		Mechanical kit for digital position feedback with 24 V AC/DC microswitches (change-over contacts) (Note: 2)	50
	Design (Varnish/Coding)	Standard	1
		Higher Stiffness + Lower Air Capacity	H
		Increased Corrosion Protection incl. Protection Class IP66	S
Optional	Device Identification Label	Stainless steel 18.5 x 65 mm (0.73 x 2.56") (Note: 4)	MK1
		Sticker 11 x 25 mm (0.43 x 0.98")	MK3

SP7-11

Note 1: Only for model with mechanical position indicator
Note 2: Not for explosion protected version and only for model with mechanical position indicator
Note 3: (Details on request)
Note 4: Plain text, max. 16 letters

Ordering Code Example: SP7-11 - 20 1 0 1 5 0 00 1

SHOPVALVES
GLOBAL VALVE SOLUTIONS | 阀门易购

SHOPVALVES
GLOBAL VALVE SOLUTIONS | 阀门易购

Positioner options for SP7-12- FOUNDATION Fieldbus

Standard	Case/Mounting	Case made of aluminium, varnished, for mounting to linear actuators acc. DIN/IEC 534/NAMUR or to rotary actuators acc. VDI/VDE 3845	10
		Case made of aluminium, varnished, with mechanical position indicator, for mounting to linear actuators acc. DIN/IEC 534/NAMUR or to rotary actuators acc. VDI/VDE 3845	20
	Input/Communication Port	FOUNDATION Fieldbus	4
	Explosion Protection	Without	0
		ATEX II 2 G Ex ib IIC T6, T4...T1 Gb	3
		IECEx Ex ib IIC T6, T4...T1 Gb	M
		NEPSI Ex ib IIC T4/T6 Gb	V
	Output/Safe Position (in case of an electrical power failure)	Single acting, fail safe	1
		Single acting, fail freeze	2
		Double acting, fail safe	4
		Double acting, fail freeze	5
	Connections	Cable: Thread ½-14 NPT, air pipe: Thread ¼-18 NPT	2
		Cable: Thread M20 x 1.5, air pipe: Thread ¼-18 NPT	5
	Option Module for Shutdown Function	Without	0
	Optional Mechanical Kit for Digital Position Feedback	Without	00
		Mechanical kit for digital position feedback with proximity switches SJ2-SN (NC or logical 1) (Note: 1)	10
		Mechanical kit for digital position feedback with 24 V AC/DC microswitches (change-over contacts) (Note: 2)	50
	Design (Varnish/ Coding)	Standard	1
		Higher Stiffness + Lower Air Capacity	H
		Increased Corrosion Protection incl. Protection Class IP66	S
	CCC Certification	CCC for Ex ib	CCC
Optional	Device Identification Label	Stainless steel 18.5 x 65 mm (0.73 x 2.56") (Note: 4)	MK1
		Sticker 11 x 25 mm (0.43 x 0.98")	MK3

SP7-12

Note 1: Only for model with mechanical position indicator
Note 2: Not for explosion protected version and only for model with mechanical position indicator
Note 3: (Details on request)
Note 4: Plain text, max. 16 letters

Ordering Code Example: SP7-12 - 20 1 0 1 5 0 00 1

SHOPVALVES
GLOBAL VALVE SOLUTIONS | 阀门易购

SHOPVALVES
GLOBAL VALVE SOLUTIONS | 阀门易购

Safety information, installation and maintenance

Full details are contained in the SP7-1* digital positioner Installation and Maintenance Instructions.

Mounting/linkage kit : Positioner mounting kits will be supplied for central mounting as standard.

Actuator Model	Valve Models	Valve Sizes	Spirax kit Nomenclature
PN9100	Spira-trol two port and QL three port	DN15 to DN50	AKL10
PN9200		DN15 to DN100	AKL10
PN9300		DN15 to DN100	AKL10
PN9400		DN125 to DN300	AKL17
TN2150	Spira-trol two port and QL three port	DN15 to DN100	AKL10
TN2300		DN125 to DN300	AKL17
		DN125 to DN300	AKL17
TN2400	Spira-trol two port and QL three port	DN125 to DN300	AKL17
		DN125 to DN300	AKL17
TN2270		DN125 to DN300	AKL17
		DN125 to DN300	AKL17
PN3000 Sprg Ext	LE, LEA and Steri-trol	DN15 to DN100	AKL10
PN4000 Sprg Ret		DN15 to DN100	AKL10
PN5000	KE, KEA, LE and LEA	DN15 to DN100	AKL10 +UBC
PN6000		DN15 to DN100	AKL10 + UBC
PN5000	QL three port	DN125 to DN200	AKL11 + UBC
PN6000		DN125 to DN200	AKL11 + UBC
PN1600	'C' series	DN65 to DN100	AKL11
PN1600		DN125 to DN200	AKL11
PN1600	Spira-trol	DN125 to DN300	AKL11

Gauge blocks

		Spirax Nomenclature	Weight
6 bar/87 psi NPT ¼"	Single acting	GBS6A	0.28 kg
	Double acting	GBD6A	0.32 kg
0.6 MPa/87 psi NPT ¼"	Single acting	GBS06A	0.28 kg
	Double acting	GBD06A	0.32 kg

How to order

Example: 1 off Spirax Sarco SP7-10-2010150001 Smart positioner with AKL10 mounting kit and GBS6A gauge block..
Caution: The SP7-1* positioner must have a high quality air supply to ISO 8573-1:2010 Class 3:3:3.

SHOPVALVES
GLOBAL VALVE SOLUTIONS | 阀门易购