SHOPVALVES
GLOBAL VALVE SOLUTIONS | 阀门易购

spirax sarco

TDC46M, TDS46M and UTDS46M Thermodynamic Steam Traps with Maintainable Seat

Installation and Maintenance Instructions

TDC46M and TDS46M

UTDS46M

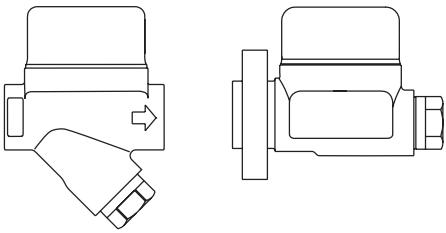

Screwed and Socket weld

TDC46M and TDS46M

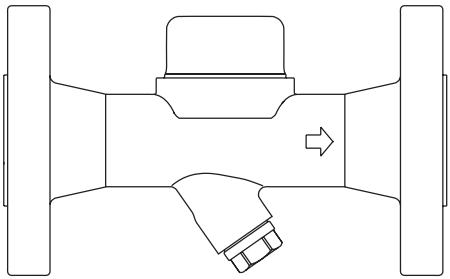

Flanged

1. Safety information
2. General product information
3. Installation
4. Commissioning
5. Operation
6. Maintenance
7. Spare parts

© Copyright 2026

Printed in GB

SHOPVALVES
GLOBAL VALVE SOLUTIONS | 阀门易购

SHOPVALVES
GLOBAL VALVE SOLUTIONS | 阀门易购

SHOPVALVES
GLOBAL VALVE SOLUTIONS | 阀门易购

SHOPVALVES
GLOBAL VALVE SOLUTIONS | 阀门易购

1. Safety information

Safe operation of these products can only be guaranteed if they are properly installed, commissioned, used and maintained by qualified personnel (see Section 1.11) in compliance with the operating instructions. General installation and safety instructions for pipeline and plant construction, as well as the proper use of tools and safety equipment must also be complied with.

1.1 Intended use

Referring to the Installation and Maintenance Instructions, product markings and Technical Information Sheet, check that the product is suitable for the intended use/application. These products comply with the requirements of the European Pressure Equipment Directive 2014/68/EU and all fall within category 'SEP'.

i) These products have been specifically designed for use on steam, air or condensate / water, which is in Group 2 of the above mentioned Pressure Equipment Directive. The products' use on other fluids may be possible but, if this is contemplated, Spirax Sarco should be contacted to confirm the suitability of the product for the application being considered.

ii) Check material suitability, pressure and temperature and their maximum and minimum values. If the maximum operating limits of the product are lower than those of the system in which it is being fitted, or if malfunction of the product could result in a dangerous overpressure or overtemperature occurrence, ensure a safety device is included in the system to prevent such over-limit situations.

iii) Determine the correct installation situation and direction of fluid flow.

iv) Spirax Sarco products are not intended to withstand external stresses that may be induced by any system to which they are fitted. It is the responsibility of the installer to consider these stresses and take adequate precautions to minimise them.

v) Remove protection covers from all connections, where appropriate, before installation on steam or other high temperature applications.

1.2 Access

Ensure safe access and if necessary a safe working platform (suitably guarded)before attempting to work on the product. Arrange suitable lifting gear if required.

1.3 Lighting

Ensure adequate lighting, particularly where detailed or intricate work is required.

1.4 Hazardous liquids or gases in the pipeline

Consider what is in the pipeline or what may have been in the pipeline at some previous time. Consider: flammable materials, substances hazardous to health, extremes of temperature.

1.5 Hazardous environment around the product

Consider: explosion risk areas, lack of oxygen (e.g. tanks, pits), dangerous gases, extremes of temperature, hot surfaces, fire hazard (e.g. during welding), excessive noise, moving machinery.

SHOPVALVES
GLOBAL VALVE SOLUTIONS | 阀门易购

SHOPVALVES
GLOBAL VALVE SOLUTIONS | 阀门易购

1.6 The system

Consider the effect on the complete system of the work proposed. Will any proposed action (e.g. closing isolation valves, electrical isolation) put any other part of the system or any personnel at risk?
Dangers might include isolation of vents or protective devices or the rendering ineffective of controls or alarms. Ensure isolation valves are opened and closed progressively to avoid system shocks.

1.7 Pressure systems

Ensure that any pressure is isolated and safely vented to atmospheric pressure. Consider double isolation (double block and bleed) and the locking or labelling of closed valves. Do not assume that the system has depressurised even when the pressure gauge indicates zero.

1.8 Temperature

Allow time for temperature to normalise after isolation to avoid the danger of burns.

1.9 Tools and consumables

Before starting work ensure that you have suitable tools and/or consumables available. Use only genuine Spirax Sarco replacement parts.

1.10 Protective clothing

Consider whether you and / or others in the vicinity require any protective clothing to protect against the hazards of, for example, chemicals, high / low temperature, radiation, noise, falling objects, and dangers to eyes and face.

1.11 Permits to work

All work must be carried out or be supervised by a suitably competent person.Installation and operating personnel should be trained in the correct use of the product according to the Installation and Maintenance Instructions.
Where a formal 'permit to work' system is in force it must be complied with. Where there is no such system, it is recommended that a responsible person should know what work is going on and, where necessary, arrange to have an assistant whose primary responsibility is safety.
Post 'warning notices' if necessary.

1.12 Handling

Manual handling of large and/or heavy products may present a risk of injury. Lifting, pushing, pulling, carrying or supporting a load by bodily force can cause injury particularly to the back. You are advised to assess the risks taking into account the task, the individual, the load and the working environment and use the appropriate handling method depending on the circumstances of the work being done.

SHOPVALVES
GLOBAL VALVE SOLUTIONS | 阀门易购

SHOPVALVES
GLOBAL VALVE SOLUTIONS | 阀门易购

1.13 Residual hazards

In normal use the external surface of the product may be very hot. If used at the maximum permitted operating conditions the surface temperature may reach temperatures in excess of 450 °C (842 °F).
Many products are not self-draining. Take due care when dismantling or removing the product from an installation (refer to 'Maintenance instructions').

1.14 Freezing

Provision must be made to protect products which are not self-draining against frost damage in environments where they may be exposed to temperatures below freezing point.

1.15 Disposal

Unless otherwise stated in the Installation and Maintenance Instructions, this product is recyclable and no ecological hazard is anticipated with its disposal providing due care is taken.

Please visit the Spirax Sarco product compliance web pages
https://www.spiraxsarco.com/product-compliance
for up to date information on any substances of concern that may be contained within this product. Where no additional information is provided on the Spirax Sarco product compliance web page, this product may be safely recycled and/or disposed providing due care is taken. Always check your local recycling and disposal regulations.

1.16 Returning products

Customers and stockists are reminded that under EC Health, Safety and Environment Law, when returning products to Spirax Sarco they must provide information on any hazards and the precautions to be taken due to contamination residues or mechanical damage which may present a health, safety or environmental risk. This information must be provided in writing including Health and Safety data sheets relating to any substances identified as hazardous or potentially hazardous.

SHOPVALVES
GLOBAL VALVE SOLUTIONS | 阀门易购

SHOPVALVES
GLOBAL VALVE SOLUTIONS | 阀门易购

2. General product information

2.1 General description

The **TDC46M**, **TDS46M** and **UTDS46M** are maintainable thermodynamic steam traps with integral strainer, integral air vent, insulation cap and a replaceable seat to ease maintenance. These steam traps, where pipe connections permit, have been specifically designed for low capacity applications up to 46 bar g (667 psi g). The UTDS46M is attached to a suitable pipeline connector by two screws for quick and easy installation, workshop and replacement.

Available types:

Model	Body and cover	Pipeline connections
TDC46M	Carbon steel body with stainless steel top cap	Screwed, socket weld and flanged
TDS46M	Stainless steel	Screwed, socket weld and flanged
UTDS46M	Stainless steel	Designed for use with pipeline connectors – See Section 2.2

Optional extras

A **BDV1 integral blowdown valve** can be pre-fitted to the strainer cap on the the **TDC46M** and **TDS46M** but must be specified at the time of order placement.
Alternatively a retrofit kit can be supplied – See Section 7 'Spare parts'.

A **BDV2 integral blowdown valve** can be pre-fitted to the strainer cap on the **UTDS46M** but must be specified at the time of order placement.
Alternatively a retrofit kit can be supplied – See Section 7 'Spare parts'.

Standards

These products fully comply with the requirements of the European Pressure Equipment Directive 2014/68/EU.

Certification

These products are available with certification to EN 10204 3.1.
Note: All certification / inspection requirements must be stated at the time of order placement.

Note: For additional product information see the following Technical Information sheets:
TDC46M TI-P187-04, **TDS46M** TI-P187-02 and **UTDS46M** TI-P187-03.

SHOPVALVES
GLOBAL VALVE SOLUTIONS | 阀门易购

SHOPVALVES
GLOBAL VALVE SOLUTIONS | 阀门易购

2.2 Sizes and pipe connections

TDC46M and **TDS46M**
½", ¾" and 1" screwed BSP T Rp (ISO 7-1) or NPT.
½", ¾" and 1" socket weld ends to BS 3799 Class 3000 lb.
DN15, DN20 and DN25 integrally flanged EN 1092 PN40, PN100 and ASME class 150, ASME class 300 or ASME class 600.

UTDS46M
The UTDS46M can be fitted to a variety of pipeline connectors:

PC10HP	Straight connector	ASME Class 600	(TI-P128-10)
PC3_	Connector with one piston isolation valve	ASME Class 600	(TI-P128-02)
PC4_	Connector with two piston isolation valves	ASME Class 600	(TI-P128-03)

See the relevant Technical Information sheet as listed above for details of the connections available for each pipeline connector.

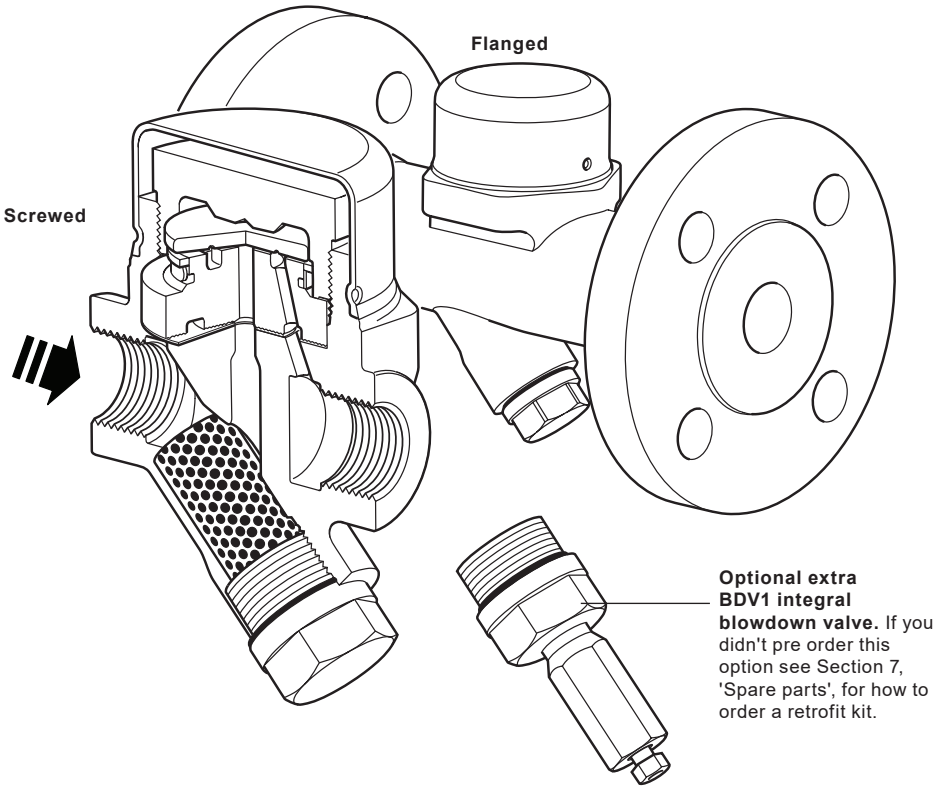

Fig. 1 ½" TDC46M and TDS46M

SHOPVALVES
GLOBAL VALVE SOLUTIONS | 阀门易购

SHOPVALVES
GLOBAL VALVE SOLUTIONS | 阀门易购

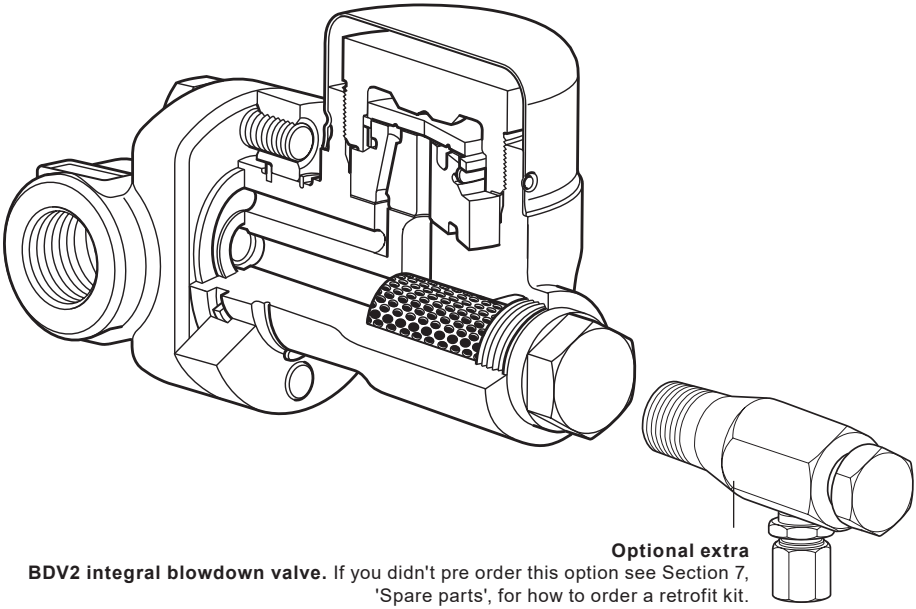

Fig. 2 UTDS46M shown coupled to a PC10HP pipeline connector

SHOPVALVES
GLOBAL VALVE SOLUTIONS | 阀门易购

SHOPVALVES
GLOBAL VALVE SOLUTIONS | 阀门易购

2.3 Pressure/temperature limits (ISO 6552)

TDC46M	Screwed			see Section 2.4
	Socket weld			
	Flanged	PN100		see Section 2.5
		PN40		see Section 2.6
		ASME	Class 600	see Section 2.7
			Class 300	see Section 2.8
			Class 150	see Section 2.9
TDS46M	Screwed			see Section 2.10
	Socket weld			
	Flanged	PN100		see Section 2.11
		PN40		see Section 2.12
		ASME	Class 600	see Section 2.13
			Class 300	see Section 2.14
			Class 150	see Section 2.15
UTDS46M	Universal connection to a PC_ pipeline connector			see Section 2.16

SHOPVALVES
GLOBAL VALVE SOLUTIONS | 阀门易购

SHOPVALVES
GLOBAL VALVE SOLUTIONS | 阀门易购

2.4 TDC46M Pressure / temperature limits (ISO 6552)

Screwed and Socket weld

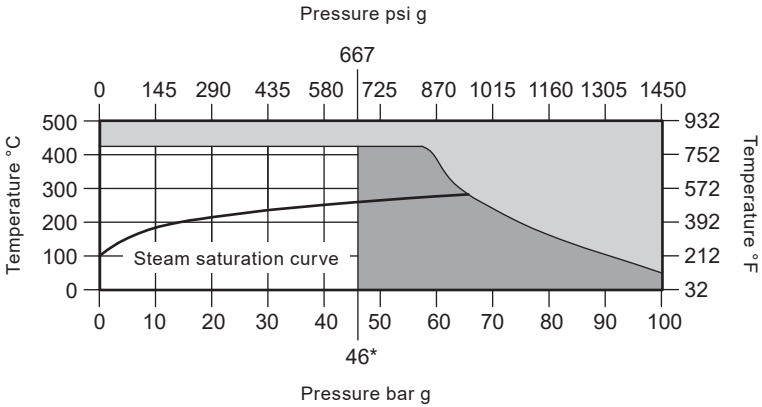

The product **must not** be used in this region.

The product should not be used in this region.

Body design condition			PN100 and ASME Class 600
PMA	Maximum allowable pressure	100 bar g @ 50 °C	(1 450 psi g @ 122 °F)
TMA	Maximum allowable temperature	425 °C @ 57.5 bar g	(797 °F @ 834 psi g)
Minimum allowable temperature		-29 °C	(-20 °F)
PMO	Maximum operating pressure where applicable	* 46 bar g @ 425 °C	(667 psi g @ 797 °F)
TMO	Maximum operating temperature	425 °C @ 46 bar g	(797 °F @ 667 psi g)
Minimum operating temperature		0 °C	(32 °F)
Minimum operating pressure		1.5 bar g	(22 psi g)
Maximum operating backpressure			80% of upstream pressure
Product is safe for use under full vacuum conditions			
Designed for a maximum cold hydraulic test pressure of:		150 bar g	(2 175 psi g)

SHOPVALVES
GLOBAL VALVE SOLUTIONS | 阀门易购

SHOPVALVES
GLOBAL VALVE SOLUTIONS | 阀门易购

2.5 TDC46M Pressure/temperature limits (ISO 6552)

Flanged PN100

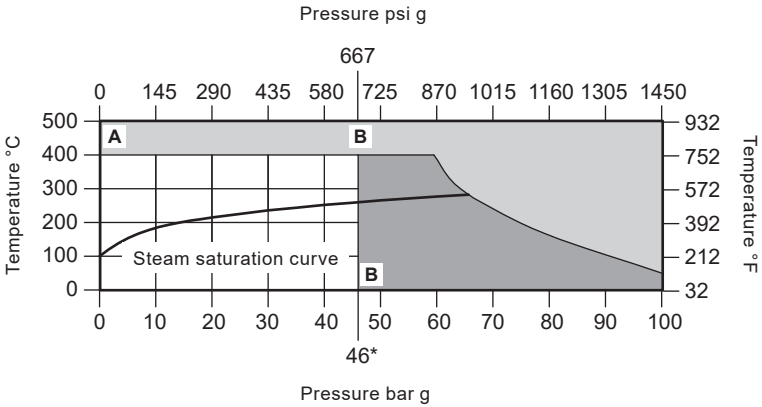

The product **must not** be used in this region.

The product should not be used in this region.

		Body design condition			PN100
		PMA	Maximum allowable pressure	100 bar g @ 50 °C	(1 450 psi g @ 122 °F)
		TMA	Maximum allowable temperature	400 °C @ 59.5 bar g	(752 °F @ 863 psi g)
		Minimum allowable temperature		-10 °C	(14 °F)
		PMO	Maximum operating pressure where applicable	*46 bar g @ 400 °C	(667 psi g @ 752 °F)
A-B-B	**PN100**	TMO	Maximum operating temperature	400 °C @ 46 bar g	(752 °F @ 667 psi g)
		Minimum operating temperature		0 °C	(32 °F)
		Minimum operating pressure		1.5 bar g	(22 psi g)
		Maximum operating backpressure			80% of upstream pressure
		Product is safe for use under full vacuum conditions			
		Designed for a maximum cold hydraulic test pressure of:		150 bar g	(2 175 psi g)

SHOPVALVES
GLOBAL VALVE SOLUTIONS | 阀门易购

SHOPVALVES
GLOBAL VALVE SOLUTIONS | 阀门易购

2.6 TDC46M Pressure/temperature limits (ISO 6552)

Flanged PN40

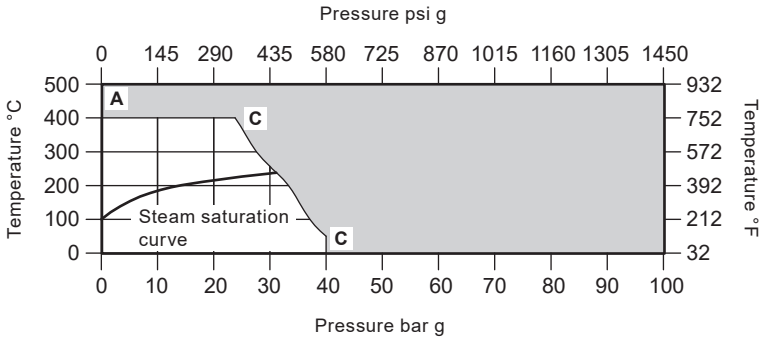

The product **must not** be used in this region.

	Body design condition			PN40
	PMA	Maximum allowable pressure	40 bar g @ 50 °C	(580 psi g @ 122 °F)
	TMA	Maximum allowable temperature	400 °C @ 23.8 bar g	(752 °F @ 345 psi g)
	Minimum allowable temperature		-10 °C	(14 °F)
	PMO	Maximum operating pressure for saturated steam service	31.1 bar g @ 238 °C	(451 psi g @ 460 °F)
A-C-C **PN40**	TMO	Maximum operating temperature	400 °C @ 24 bar g	(752 °F @ 345 psi g)
	Minimum operating temperature		0 °C	(32 °F)
	Minimum operating pressure		1.5 bar g	(22 psi g)
	Maximum operating backpressure			80% of upstream pressure
	Product is safe for use under full vacuum conditions			
	Designed for a maximum cold hydraulic test pressure of:		60 bar g	(870 psi g)

SHOPVALVES
GLOBAL VALVE SOLUTIONS | 阀门易购

SHOPVALVES
GLOBAL VALVE SOLUTIONS | 阀门易购

2.7 TDC46M Pressure/temperature limits (ISO 6552)

Flanged ASME Class 600

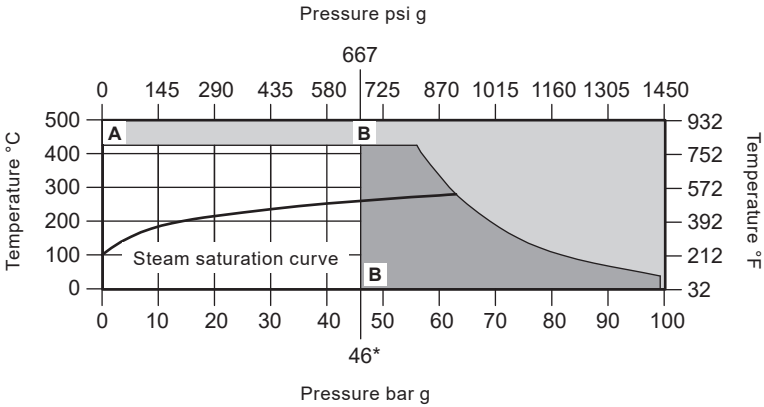

The product **must not** be used in this region.

The product should not be used in this region.

		Body design conditions			ASME Class 600
A-B-B	ASME 600	PMA	Maximum allowable pressure	99.3 bar g @ 38 °C	(1 440 psi g @ 100 °F)
		TMA	Maximum allowable temperature	425 °C @ 56 bar g	(797 °F @ 812 psi g)
		Minimum allowable temperature		-29 °C	(-20 °F)
		PMO	Maximum operating pressure where applicable	*46 bar g	(667 psi g)
		TMO	Maximum operating temperature	425 °C @ 46 bar g	(797 °F @ 667 psi g)
		Minimum operating temperature		0 °C	(32 °F)
		Minimum operating pressure		1.5 bar g	(22 psi g)
		Maximum operating backpressure			80% of upstream pressure
		Product is safe for use under full vacuum conditions			
		Designed for a maximum cold hydraulic test pressure of:		149 bar g	(2 161 psi g)

SHOPVALVES
GLOBAL VALVE SOLUTIONS | 阀门易购

SHOPVALVES
GLOBAL VALVE SOLUTIONS | 阀门易购

2.8 TDC46M Pressure/temperature limits (ISO 6552) - Flanged ASME Class 300

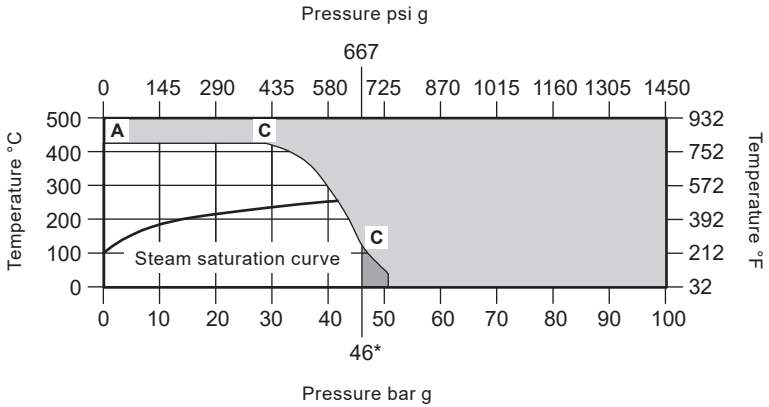

The product **must not** be used in this region.

The product should not be used in this region.

		Body design conditions			ASME Class 300
A-C-C	ASME 300	PMA	Maximum allowable pressure	51.1 bar g @ 38 °C	(741 psi g @ 100 °F)
		TMA	Maximum allowable temperature	425 °C @ 28.8 bar g	(797 °F @ 417 psi g)
		Minimum allowable temperature		-29 °C	(-20 °F)
		PMO	Maximum operating pressure for saturated steam service	43 bar g	(623 psi g)
		TMO	Maximum operating temperature	425 °C @ 28.8 bar g	(797 °F @ 417 psi g)
		Minimum operating temperature		0 °C	(32 °F)
		Minimum operating pressure		1.5 bar g	(22 psi g)
		Maximum operating backpressure			80% of upstream pressure
		Product is safe for use under full vacuum conditions			
		Designed for a maximum cold hydraulic test pressure of:		76.7 bar g	(1 111 psi g)

SHOPVALVES
GLOBAL VALVE SOLUTIONS | 阀门易购

SHOPVALVES
GLOBAL VALVE SOLUTIONS | 阀门易购

2.9 TDC46M Pressure/temperature limits (ISO 6552) - Flanged ASME Class 150

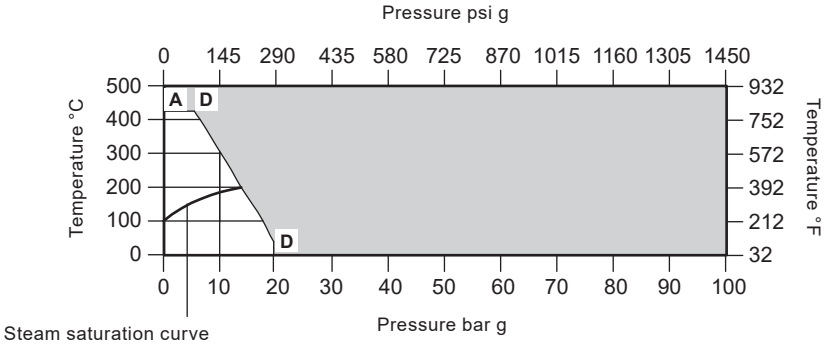

The product **must not** be used in this region.

		Body design conditions			ASME Class 150
		PMA	Maximum allowable pressure	19.6 bar g @ 38 °C	(284 psi g @ 100 °F)
		TMA	Maximum allowable temperature	425 °C @ 5.5 bar g	(79 °F @ 797 psi g)
		Minimum allowable temperature		-29 °C	(-20 °F)
A-D-D	**ASME 150**	PMO	Maximum operating pressure for saturated steam service	14 bar g	(203 psi g)
		TMO	Maximum operating temperature	425 °C @ 5.5 bar g	(79 °F @ 797 psi g)
		Minimum operating temperature		0 °C	(32 °F)
		Minimum operating pressure		1.5 bar g	(22 psi g)
		Maximum operating backpressure			80% of upstream pressure
		Product is safe for use under full vacuum conditions			
		Designed for a maximum cold hydraulic test pressure of:		29.4 bar g	(426 psi g)

SHOPVALVES
GLOBAL VALVE SOLUTIONS | 阀门易购

SHOPVALVES
GLOBAL VALVE SOLUTIONS | 阀门易购

2.10 TDS46M Pressure/temperature limits (ISO 6552)

Screwed and Socket weld

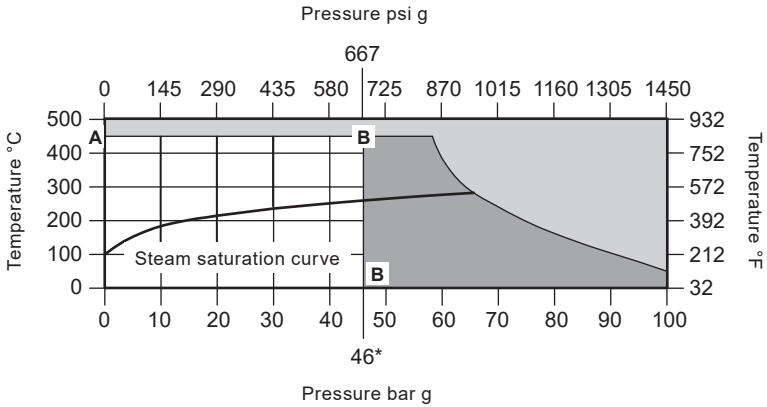

The product **must not** be used in this region.

The product should not be used in this region.

A-B-B	**Screwed and Socket weld**	Body design condition			PN100 and ASME Class 600
		PMA	Maximum allowable pressure	100 bar g @ 50 °C	(1 450 psi g @ 122 °F)
		TMA	Maximum allowable temperature	450 °C @ 58.3 bar g	(842 °F @ 845 psi g)
		Minimum allowable temperature		-50 °C	(-58 °F)
		PMO	Maximum operating pressure	46 bar g @ 450 °C	(667 psi g @ 842 °F)
		TMO	Maximum operating temperature	450 °C @ 46 bar g	(842 °F @ 667 psi g)
		Minimum operating temperature		0 °C	(32 °F)
		Minimum operating pressure		1.5 bar g	(22 psi g)
		Maximum operating backpressure			80% of upstream pressure
		Product is safe for use under full vacuum conditions			
		Designed for a maximum cold hydraulic test pressure of:		150 bar g	(2 175 psi g)

SHOPVALVES
GLOBAL VALVE SOLUTIONS | 阀门易购

SHOPVALVES
GLOBAL VALVE SOLUTIONS | 阀门易购

2.11 TDS46M Pressure/temperature limits (ISO 6552)

Flanged PN100

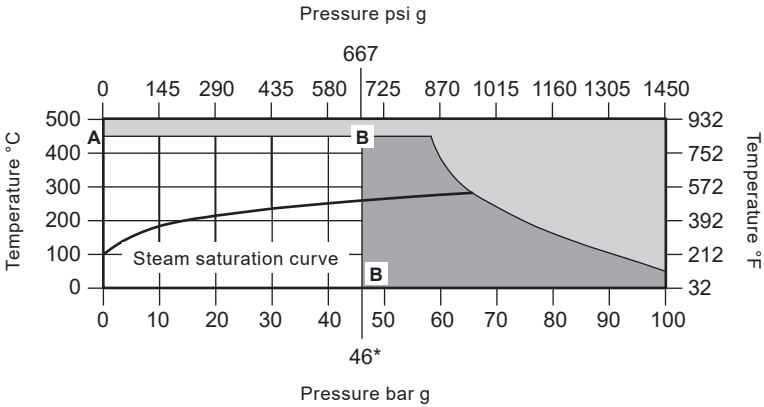

	Body design condition			PN100
	PMA	Maximum allowable pressure	100 bar g @ 50 °C	(1 450 psi g @ 122 °F)
	TMA	Maximum allowable temperature	450 °C @ 58.3 bar g	(842 °F @ 845 psi g)
	Minimum allowable temperature		-50 °C	(-58 °F)
	PMO	Maximum operating pressure where applicable	*46 bar g @ 450 °C	(667 psi g @ 842 °F)
A-B-B **PN100**	TMO	Maximum operating temperature	450 °C @ 46 bar g	(842 °F @ 667 psi g)
	Minimum operating temperature		0 °C	(32 °F)
	Minimum operating pressure		1.5 bar g	(22 psi g)
	Maximum operating backpressure			80% of upstream pressure
	Product is safe for use under full vacuum conditions			
	Designed for a maximum cold hydraulic test pressure of:		150 bar g	(2 175 psi g)

SHOPVALVES
GLOBAL VALVE SOLUTIONS | 阀门易购

SHOPVALVES
GLOBAL VALVE SOLUTIONS | 阀门易购

2.12 TDS46M Pressure/temperature limits (ISO 6552)

Flanged PN40

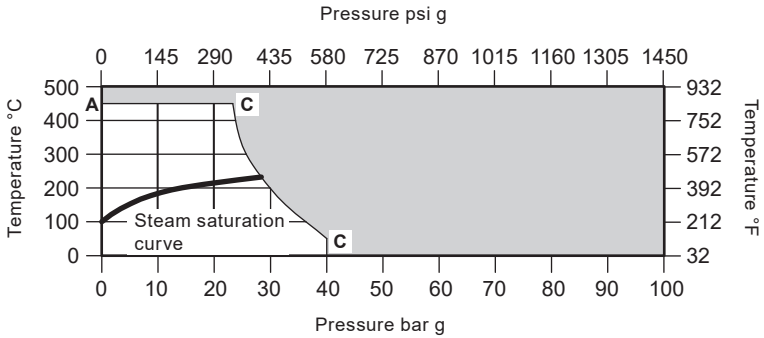

The product **must not** be used in this region.

The product should not be used in this region.

	Body design condition			PN40
	PMA	Maximum allowable pressure	40 bar g @ 50 °C	(580 psi g @ 122 °F)
	TMA	Maximum allowable temperature	450 °C @ 23.3 bar g	(842 °F @ 338 psi g)
	Minimum allowable temperature		-50 °C	(-58 °F)
	PMO	Maximum operating pressure for saturated steam service	28.4 bar g @ 233 °C	(412 psi g @ 451 °F)
A-C-C **PN40**	TMO	Maximum operating temperature	450 °C @ 23.3 bar g	(842 °F @ 338 psi g)
	Minimum operating temperature		0 °C	(32 °F)
	Minimum operating pressure		1.5 bar g	(22 psi g)
	Maximum operating backpressure			80% of upstream pressure
	Product is safe for use under full vacuum conditions			
	Designed for a maximum cold hydraulic test pressure of:		60 bar g	(870 psi g)

SHOPVALVES
GLOBAL VALVE SOLUTIONS | 阀门易购

SHOPVALVES
GLOBAL VALVE SOLUTIONS | 阀门易购

2.13 TDS46M Pressure/temperature limits (ISO 6552)

Flanged ASME Class 600

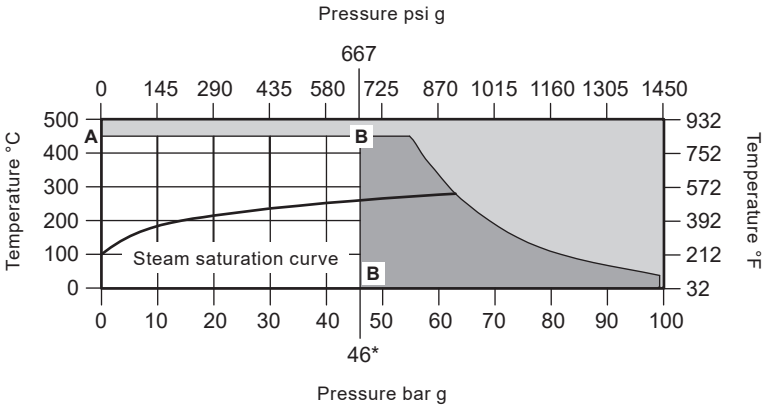

The product **must not** be used in this region.

The product should not be used in this region.

		Body design conditions			ASME Class 600
		PMA	Maximum allowable pressure	99.3 bar g @ 38 °C	(1 440 psi g @ 100 °F)
		TMA	Maximum allowable temperature	450 °C @ 54.8 bar g	(842 °F @ 795 psi g)
		Minimum allowable temperature		-50 °C	(-58 °F)
A-B-B	**ASME 600**	PMO	Maximum operating pressure where applicable	*46 bar g	(667 psi g)
		TMO	Maximum operating temperature	450 °C @ 46 bar g	(842 °F @ 667 psi g)
		Minimum operating temperature		0 °C	(32 °F)
		Minimum operating pressure		1.5 bar g	(22 psi g)
		Maximum operating backpressure			80% of upstream pressure
		Product is safe for use under full vacuum conditions			
		Designed for a maximum cold hydraulic test pressure of:		149 bar g	(2 161 psi g)

SHOPVALVES
GLOBAL VALVE SOLUTIONS | 阀门易购

SHOPVALVES
GLOBAL VALVE SOLUTIONS | 阀门易购

2.14 TDS46M Pressure/temperature limits (ISO 6552)

Flanged ASME Class 300

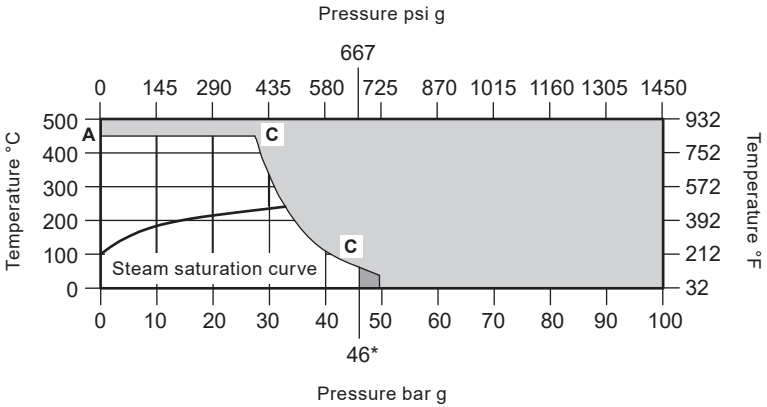

The product **must not** be used in this region.

The product should not be used in this region.

		Body design conditions			ASME Class 300
		PMA	Maximum allowable pressure	49.6 bar g @ 38 °C	(719 psi g @ 100 °F)
		TMA	Maximum allowable temperature	450 °C @ 27.4 bar g	(842 °F @ 397 psi g)
		Minimum allowable temperature		-50 °C	(-58 °F)
A-C-C	**ASME 300**	PMO	Maximum operating pressure for saturated steam service	33 bar g	(478 psi g)
		TMO	Maximum operating temperature	450 °C @ 27.4 bar g	(842 °F @ 397 psi g)
		Minimum operating temperature		0 °C	(32 °F)
		Minimum operating pressure		1.5 bar g	(22 psi g)
		Maximum operating backpressure			80% of upstream pressure
		Product is safe for use under full vacuum conditions			
		Designed for a maximum cold hydraulic test pressure of:		74.4 bar g	(1 079 psi g)

SHOPVALVES
GLOBAL VALVE SOLUTIONS | 阀门易购

SHOPVALVES
GLOBAL VALVE SOLUTIONS | 阀门易购

2.15 TDS46M Pressure/temperature limits (ISO 6552)

Flanged ASME Class 150

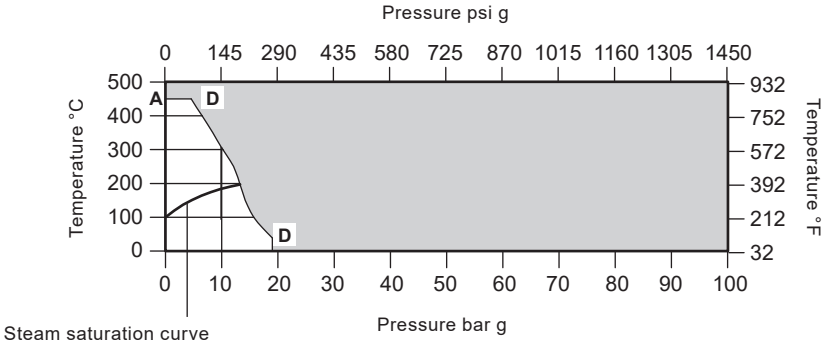

The product **must not** be used in this region.

		Body design conditions			ASME Class 150
		PMA	Maximum allowable pressure	19 bar g @ 38 °C	(275 psi g @ 100 °F)
		TMA	Maximum allowable temperature	450 °C @ 4.6 bar g	(842 °F @ 66 psi g)
		Minimum allowable temperature		-50 °C	(-58 °F)
A-D-D	**ASME 150**	PMO	Maximum operating pressure for saturated steam service	14 bar g	(203 psi g)
		TMO	Maximum operating temperature	450 °C @ 4.6 bar g	(842 °F @ 66 psi g)
		Minimum operating temperature		0 °C	(32 °F)
		Minimum operating pressure		1.5 bar g	(22 psi g)
		Maximum operating backpressure			80% of upstream pressure
		Product is safe for use under full vacuum conditions			
		Designed for a maximum cold hydraulic test pressure of:		28.5 bar g	(413 psi g)

SHOPVALVES
GLOBAL VALVE SOLUTIONS | 阀门易购

SHOPVALVES
GLOBAL VALVE SOLUTIONS | 阀门易购

2.16 UTDS46M Pressure/temperature limits (ISO 6552)

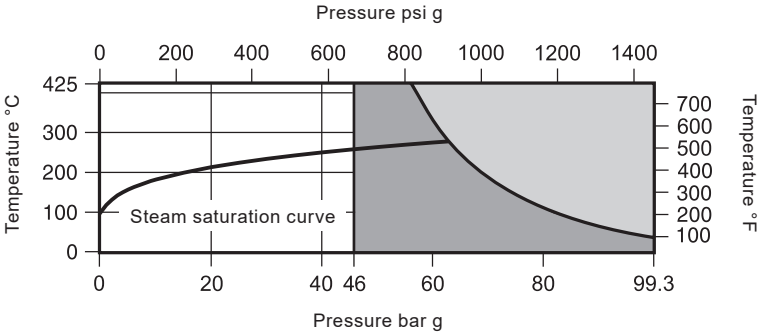

The product **must not** be used in this region.

The product should not be used in this region.

Note: The model of pipeline connector and connection selected will dictate the maximum operating limits of the complete assembly.
Reference the specific pipeline connector Technical Information sheet as detailed in 'Pipeline connector options'.

Body design conditions			ASME Class 600
PMA	Maximum allowable pressure	99.3 bar g @ 38 °C	(1 440 psi g @ 100 °F)
TMA	Maximum allowable temperature	425 °C @ 56 bar g	(797 °F @ 812 psi g)
Minimum allowable temperature		-40 °C	(-40 °F)
PMO	Maximum operating pressure	46 bar g @ 425 °C	(667 psi g @ 797 °F)
TMO	Maximum operating temperature	425 °C @ 46 bar g	(797 °F @ 667 psi g)
Minimum operating pressure		1.5 bar g	(22 psi g)
Minimum operating temperature		0 °C	(32 °F)
Note: For lower operating temperatures consult Spirax Sarco			
PMOB	Maximum operating backpressure should not exceed 80% of the upstream pressure		
Product is safe for use under full vacuum conditions			
Designed for a maximum cold hydraulic test pressure of		149 bar g	(2 161 psi g)

SHOPVALVES
GLOBAL VALVE SOLUTIONS | 阀门易购

SHOPVALVES
GLOBAL VALVE SOLUTIONS | 阀门易购

3. Installation

Note: Before actioning any installation observe the 'Safety information' in Section 1.

Referring to the Installation and Maintenance Instructions, product markings and Technical Information Sheet, check that the product is suitable for the intended installation:

3.1 Check materials and maximum pressure / temperature values. If the maximum operating limit of the product is lower than that of the system in which it is being fitted, ensure that a safety device is included in the system to prevent overpressurisation.

3.2 Determine the correct installation situation and direction of fluid flow. The flow direction is clearly marked on the trap body or pipeline connector. A typical installation is shown in Figure 3.

3.3 Remove protection covers from all connections, where appropriate, before installation on steam or other high temperature applications.

3.4 The preferred installation is in a horizontal pipe with the insulating cap uppermost.
The trap will operate in other positions, but the service life will be reduced. The installation should have a small drop leg preceding the trap. Access for removal of the integral strainer screen should also be provided.

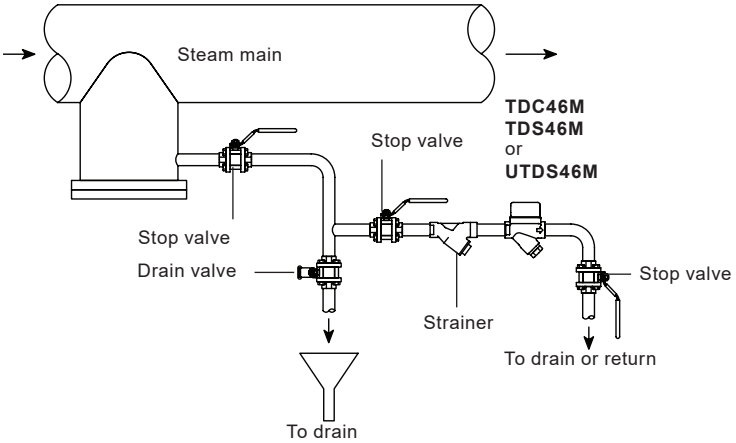

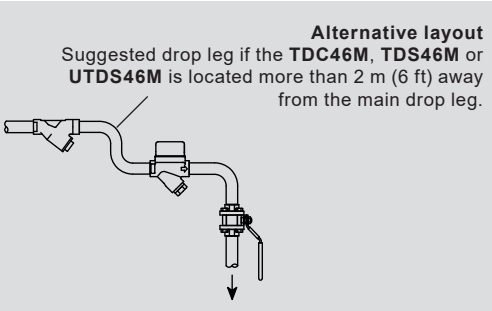

Fig. 4 Typical installation

SHOPVALVES
GLOBAL VALVE SOLUTIONS | 阀门易购

SHOPVALVES
GLOBAL VALVE SOLUTIONS | 阀门易购

3.5 Suitable isolation valves must be installed to allow for safe maintenance and trap replacement. Where the trap discharges into a closed return system a non-return valve should be fitted downstream to prevent back flow.

3.6 Always open isolation valves slowly until normal operating conditions are achieved – this will avoid system shocks. Check for leaks and correct operation.

3.7 Always ensure the correct tools, safety procedures and protective equipment are used at all times.

3.8 The disc and seating surfaces of these traps have been produced to a high degree of flatness to achieve good shut-off under high pressure conditions. An integral strainer helps prevent dirt and scale from entering the trap. If particles become entrapped between the disc and seat, the high flow velocities can cause rapid wear and erosion. A separate strainer and / or dirt pocket will provide additional protection.

3.9 When a socket weld version is being installed the welding should be carried out to an approved procedure of a recognised standard.

3.10 When replacing an existing trap with a new UTDS46M steam trap, always use the new connector screws (**13**) (see page 23) provided with the new trap.

Note: If the trap is to discharge to atmosphere, ensure that it is to a safe place. The discharging fluid may be at a temperature of 100 °C (212 °F).

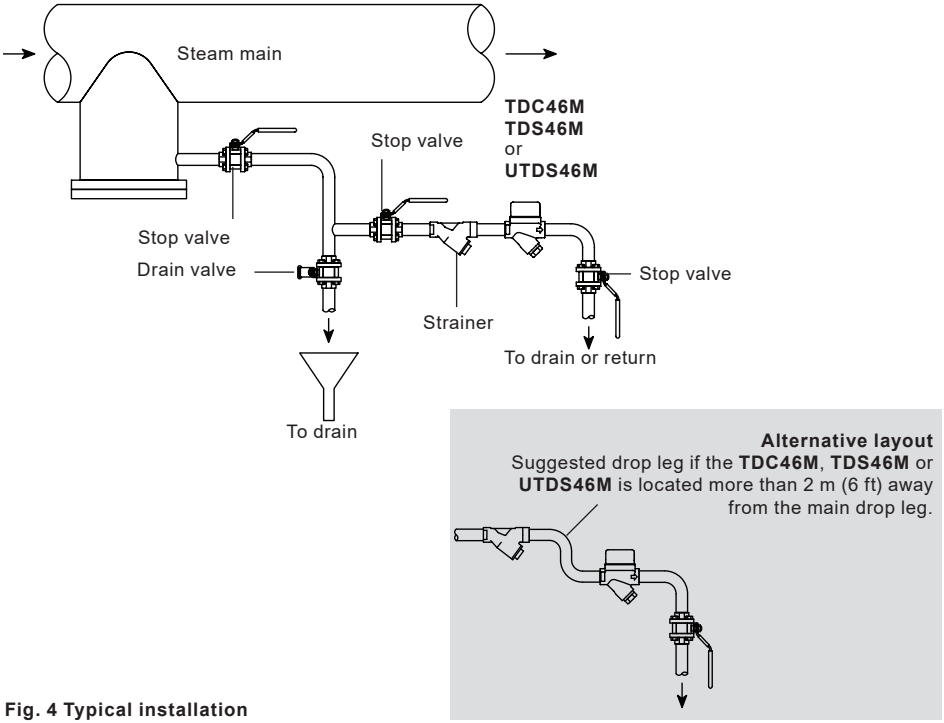

Fig. 4 Typical installation

SHOPVALVES
GLOBAL VALVE SOLUTIONS | 阀门易购

SHOPVALVES
GLOBAL VALVE SOLUTIONS | 阀门易购

4. Commissioning

4.1 Commissioning with particular reference to venting air

After installation and maintenance ensure that the system is fully functional. Carry out tests on any alarms or protective devices.

5. Operation

The **TDC46M**, **TDC46M** and **UTDS46M** are thermodynamic steam traps that use a disc to control the release of condensate and to trap steam. The trap cycles open and closed to discharge condensate, close to steam temperature, and closes tight between discharges.

The disc, rises and falls in response to dynamic forces produced by the partial re-evaporation (flashing) of hot condensate. Cool condensate, air and other non-condensable gases enter the trap through the central orifice, the bimetal ring holding the disc off the seat allows the air to escape downstream at system start-up. As the condensate temperature rises, the bimetal ring drops away allowing the disc to operate. When the condensate approaches steam temperature, a percentage of it flashes as it enters the trap. The flash steam passes at high velocity over the underside of the disc and collects in the control chamber above. The resulting pressure imbalance, forces the disc downward onto the seating surfaces, stopping the flow. The trap remains tightly closed until the loss of heat through the trap body lowers the control chamber pressure, allowing the inlet pressure to raise the disc and repeat the cycle. An insulating cover prevents the trap being unduly influenced by excessive heat loss when subjected to low ambient temperature, wind, rain, etc.

SHOPVALVES
GLOBAL VALVE SOLUTIONS | 阀门易购

SHOPVALVES
GLOBAL VALVE SOLUTIONS | 阀门易购

6. Maintenance

Note:
Before actioning any maintenance programme observe the 'Safety information' in Section 1. It is recommended that all maintenance is performed in a suitably equipped workshop.

6.1 How to fit the disc and seat:

We recommend that the steam trap is removed from the pipeline to conduct replacement of the disc and seat. Due to the required tightening torques the steam trap must be held using a suitable clamping device

- Twist off the insulating cover (**3**) and unscrew the top cap (**2**). Provision of spanner flats on the body will facilitate this operation and prevent bending of adjacent pipework.
- Lift off the disc (**4**).
- Lift out the seat unit (**5**, **6** and **7**).
- Carefully remove the seat gasket (**8**) from the body of the trap. Ensuring that no damage is caused to the trap body (**1**).
- Ensure that the gasket contact surface in the body is clean and fit a new seat gasket (**8**).
- Fit the new seat unit (**5**, **6** and **7**).
- Fit a new disc (**4**) - Ensure that the disc is fitted with the grooves facing the seat.
- Replace the top cap (**2**) and tighten to the recommended torque (see Table 1).
  Note: A suitable anti-galling thread lubricant must be used.
- Replace the insulating cover (**3**).
- Always open the isolation valves slowly and check for leaks.
- After the above operation has been completed and the trap returned to normal operation. When cool and after a period of no longer than 24 hours, re-torque the top cap (**2**) as per table 1.

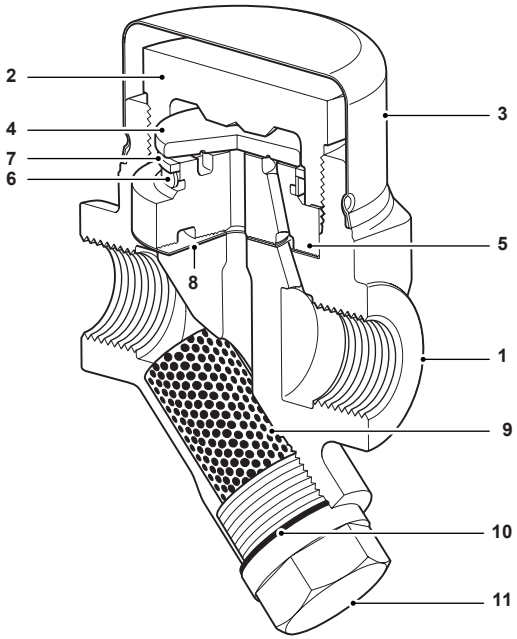

Fig. 5 TDC46M and TDS46M screwed

Please note that the parts annotated are the same for the screwed, socket weld and flanged versions.

SHOPVALVES
GLOBAL VALVE SOLUTIONS | 阀门易购

SHOPVALVES
GLOBAL VALVE SOLUTIONS | 阀门易购

Cautionary note regarding disassembly and assembly of the unit

Removal of the following parts:

- Top cap (**2**),
- Strainer cap (**11**) and the
- Optional BDV2 retrofit kit

should be carried out in a workshop - not whilst the trap is connected to the pipeline (PC) connector.

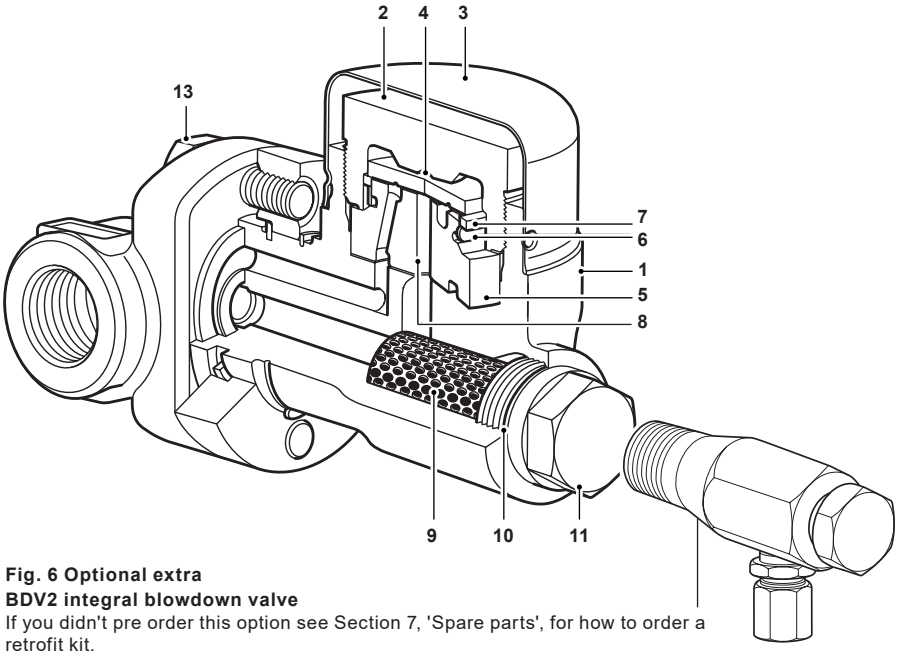

Fig. 6 Optional extra
BDV2 integral blowdown valve
If you didn't pre order this option see Section 7, 'Spare parts', for how to order a retrofit kit.

Table 1 Recommended tightening torques (for suitably lubricated threads)

Item	Part		mm	N m	(lbf ft)
2	Top cap	TDC46M	50 A/F	300	221
		TDS46M	50 A/F	400	295
		UTDS46M	50 A/F	400	295
11	Strainer cap		24 A/F	110	81
13	Connector screws UTDS46M only		9/16" A/F	33	24.3

SHOPVALVES
GLOBAL VALVE SOLUTIONS | 阀门易购

SHOPVALVES
GLOBAL VALVE SOLUTIONS | 阀门易购

6.2 How to clean or replace the strainer screen:

- Access to the strainer screen can be obtained by removing the strainer cap (**11**).
- Remove the strainer screen (**9**) and gasket (**10**).
- Fit a new or cleaned strainer screen into the recess in the cap (**11**).
- A new gasket (**10**) must always be fitted and the cap (**11**) screwed into the body and tightened to the recommended torque (see Table 1).
  Note: A suitable anti-galling thread lubricant must be used.

6.3 How to install the retrofit blowdown valve - BDV1 and BDV2

Please note that a retrofit kit will include the following components:
Gasket, **Strainer cap** with a pre-drilled hole to screw in either a **BDV1** or **BDV2**.

- Access to the strainer screen can be obtained by removing the strainer cap (**11**).
- Remove the strainer screen (**9**) and gasket (**10**).
- Fit a new or cleaned strainer screen into the recess of the strainer cap (**11** supplied with the retrofit kit) before fitting the BDV1 or BDV2 blowdown valve - See Figures 7 and 8 for product familiarisation of the **BDV1** and **BDV2** blowdown valves.
- A new gasket (**10**) must always be fitted when reassembling the unit and tightened to the recommended torque (see Table 1, item 11 - Strainer cap).
  Note: A suitable anti-galling thread lubricant must be used (**PTFE based lubricants must not be used** due to temperature limitations).

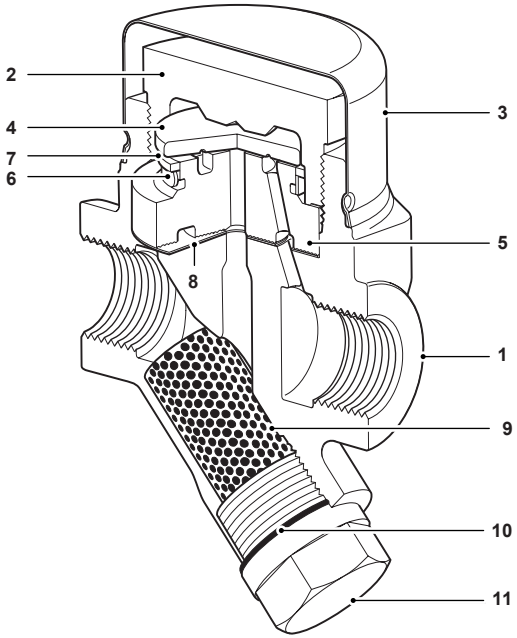

Fig. 7 TDC46M and TDS46M screwed

Please note that the parts annotated are the same for the screwed, socket weld and flanged versions.

SHOPVALVES
GLOBAL VALVE SOLUTIONS | 阀门易购

SHOPVALVES
GLOBAL VALVE SOLUTIONS | 阀门易购

Cautionary note regarding disassembly and assembly of the unit

Removal of the following parts:

- Top cap (**2**),
- Strainer cap (**11**) and the
- Optional BDV2 retrofit kit

should be carried out in a workshop - not whilst the trap is connected to the pipeline (PC) connector.

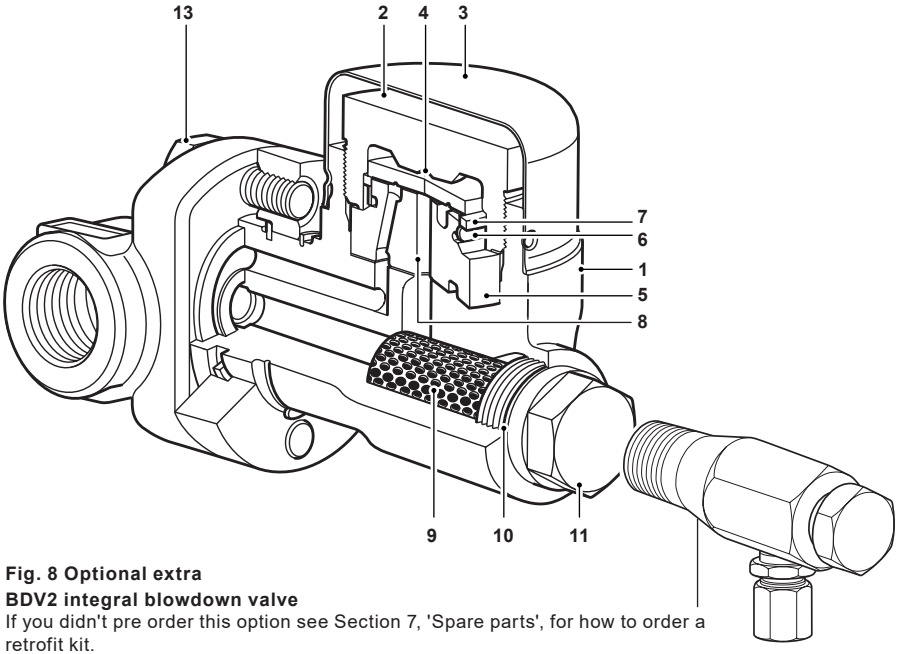

Fig. 8 Optional extra
BDV2 integral blowdown valve
If you didn't pre order this option see Section 7, 'Spare parts', for how to order a retrofit kit.

Table 1 Recommended tightening torques (for suitably lubricated threads)

Item	Part		mm	N m	(lbf ft)
2	Top cap	TDC46M	50 A/F	300	221
		TDS46M	50 A/F	400	295
		UTDS46M	50 A/F	400	295
11	Strainer cap		24 A/F	110	81
13	Connector screws UTDS46M only		9/16" A/F	33	24.3

SHOPVALVES
GLOBAL VALVE SOLUTIONS | 阀门易购

SHOPVALVES
GLOBAL VALVE SOLUTIONS | 阀门易购

7. Spare parts

TDC46M and TDS46M

Please note that the spares shown are the same for the screwed, socket weld and flanged versions.
The spare parts available are shown in solid outline. Parts drawn in a grey line are not supplied as spares.

Available spares

Insulating cover	**3**
Top cap, seat and disc assembly	**2**, **4**, **5**, **6**, **7**, **8**
Strainer screen and gasket	**9**, **10**
Set of gaskets (packet of 3 sets)	**8**, **10**
BDV1 blowdown valve retrofit kit	

How to order spares

Always order spares by using the description given in the column headed 'Available spare' and state the size and type of trap.

Example: 1 off Top cap, seat and disc assembly for a Spirax Sarco ½" TDC46M thermodynamic steam trap.

SHOPVALVES
GLOBAL VALVE SOLUTIONS | 阀门易购

SHOPVALVES
GLOBAL VALVE SOLUTIONS | 阀门易购

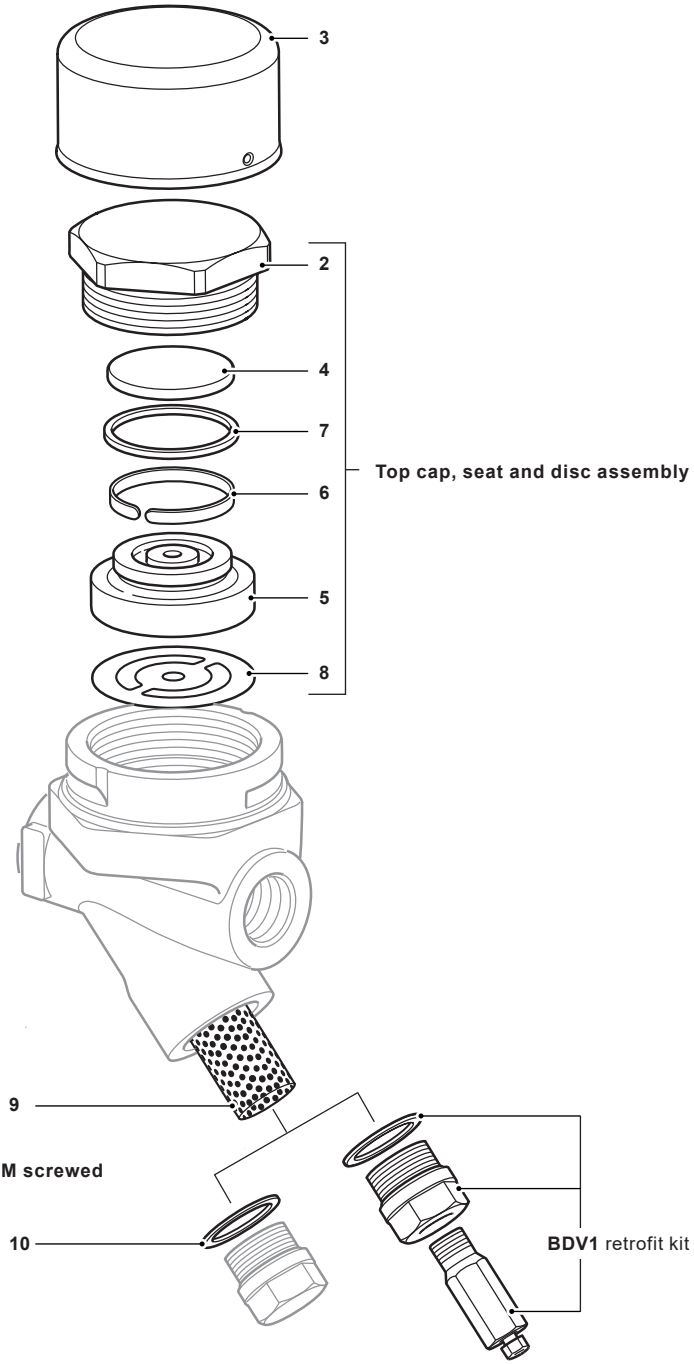

Fig. 9 TDC46M and TDS46M screwed

SHOPVALVES
GLOBAL VALVE SOLUTIONS | 阀门易购

SHOPVALVES
GLOBAL VALVE SOLUTIONS | 阀门易购

UTDS46M

The spare parts available are shown in solid outline. Parts drawn in a grey line are not supplied as spares.

Available spares

Insulating cover	**3**
Top cap, seat and disc assembly	**2, 4, 5, 6, 7, 8**
Strainer screen	**9, 10**
Set of gaskets (packets of 3 sets)	**8, 10**
Connector screws and gaskets	**13, 14, 15**
BDV2 blowdown valve retrofit kit	

How to order spares

Always order spares by using the description given in the column headed 'Available spare' and state the size and type of trap.

Example: 1 off Top cap, seat and disc assembly for a Spirax Sarco UTDS46M thermodynamic steam trap.

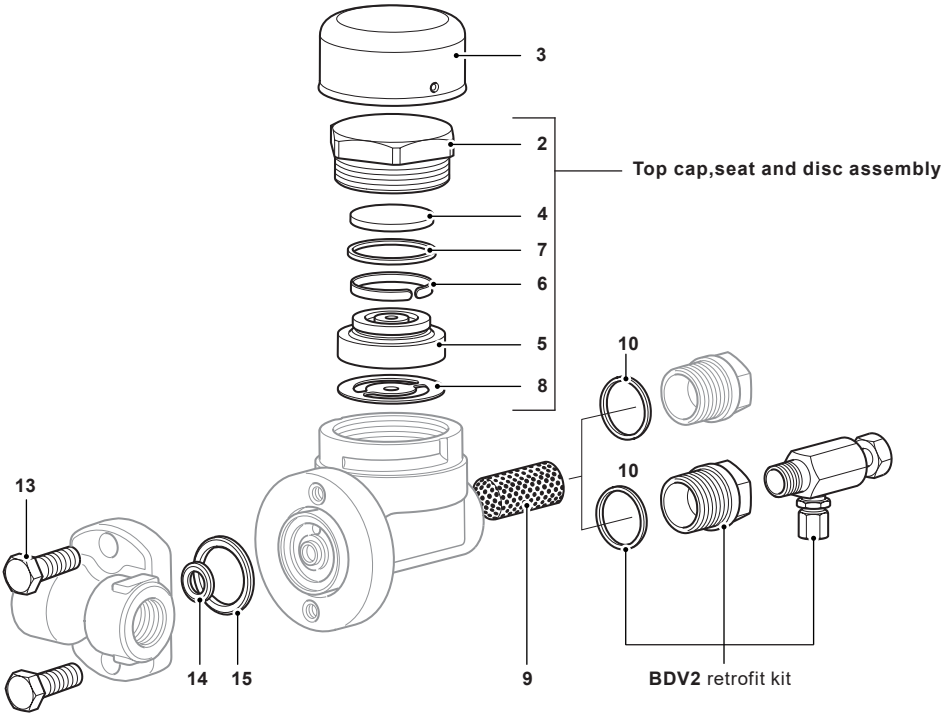

Fig. 10 UTDS46M

SHOPVALVES
GLOBAL VALVE SOLUTIONS | 阀门易购